FISH & RICHARDSON P.C.

1425 K STREET, N.W.
11TH FLOOR
WASHINGTON, DC 20005

Telephone
202 783-5070

Facsimile
202 783-2331

Web Site
www.fr.com

Frederick P. Fish
1855-1930

W.K. Richardson
1859-1951

CBI 13-185

DOCKET NUMBER
2948
Office of the Secretary
Int'l Trade Commission

VIA HAND DELIVERY

March 28, 2013

The Honorable Lisa R. Barton
Acting Secretary
U.S. International Trade Commission
500 E Street, S.W.
Washington, D.C. 20436

FR

ATLANTA
AUSTIN
BOSTON
DALLAS
DELAWARE
NEW YORK
SAN DIEGO
SILICON VALLEY
TWIN CITIES
WASHINGTON, DC

Re: Certain Sleep-Disordered Breathing Treatment Systems And Components Thereof, Inv. No. 337-TA-___

Dear Secretary Barton:

Enclosed for filing on behalf of ResMed Corp., ResMed Inc., and ResMed Ltd (collectively "ResMed"), are the following documents in support of Complainant's request that the Commission commence an investigation pursuant to the provisions of Section 337 of the Tariff Act of 1930, as amended, 19 U.S.C. §1337. Please note that Confidential Exhibits 56, 89 and 90 to the Complaint contain Confidential Business Information and pursuant to the Commission's Rules of Practice and Procedure, a request for confidential treatment of the information in those exhibits accompanies this filing. Accordingly, Complainant submits the following:

1. One original and eight (8) paper copies of Complainant's Non-Confidential Verified Complaint and the Public Interest Statement (original unbound); one (1) CD of the Non-Confidential Exhibits, and one (1) CD of the Confidential Exhibits (Commission Rules 201.6(c), 210.4(f)(2) and 210.8(a)(1)(i) and 201.8(b));

2. Three (3) additional copies of the Verified Non-Confidential Complaint, the Public Interest Statement, and three (3) CDs of the Non-Confidential Exhibits for service upon each proposed respondent (Commission Rules 210.8(a)(1)(iii) and 210.11(a));

3. Three (3) additional copies of the Confidential Exhibits on CD, one for each proposed respondent (Commission Rules 210.8(a)(1)(iii) and 210.11(a));

4. One (1) additional copy of the Non-Confidential Verified Complaint for service upon the Embassy of Taiwan (Commission Rules 210.8(a)(1)(iv) and 210.11(a)(1)(ii));

5. One (1) certified copy of each of the following asserted United States Patents: U.S. Patent No. 7,487,772 (the '772 patent), identified as Exhibit 2 in the Complaint; U.S. Patent No. 7,997,267 (the '267 patent), identified as Exhibit 3 in the Complaint; U.S. Patent No. 7,743,767 (the '767 patent) identified as Exhibit 4 in the Complaint; U.S. Patent No. 6,216,691 (the '691 patent) identified as Exhibit 5 in the Complaint; U.S. Patent No. 6,935,337 (the '337 patent), identified as Exhibit 6 in the Complaint; and U.S. Patent No. 7,614,398 (the '398 patent), identified as Exhibit 7 in the Complaint. A certified copy of U.S. Patent No. 7,159,587 (the '587 patent), identified as Exhibit 1 in the Complaint, will be submitted upon receipt;

6. One (1) certified copy of the assignments for the '587 patent identified as Exhibit 8 in the Complaint;

7. One (1) certified copy of the assignments for the '772 patent and the '267 patent identified as Exhibits 9 and 10 in the Complaint;

8. One (1) certified copy of the assignments for the '767 patent identified as Exhibit 11 in the Complaint;

9. One (1) certified copy of the assignments for the '691 patent identified as Exhibit 12 in the Complaint;

10. One (1) certified copy of the assignments for the '337 patent identified as Exhibit 13 in the Complaint;

11. One (1) certified copy of the assignments for the '398 patent identified as Exhibit 14 in the Complaint;

12. One (1) certified copy of the prosecution history of the '587 patent identified as Appendix A in the Complaint and four (4) additional copies on separate CDs. (Commission Rules 210.12(c)(1));

13. One (1) certified copy of the prosecution history of the '772 patent identified as Appendix B in the Complaint and four (4) additional copies on separate CDs. (Commission Rules 210.12(c)(1));

14. One (1) certified copy of the prosecution history of the '267 patent identified as Appendix C in the Complaint and four (4) additional copies on separate CDs. (Commission Rules 210.12(c)(1));

15. One (1) certified copy of the prosecution history of the '767 patent identified as Appendix D in the Complaint and four (4) additional copies on separate CDs. (Commission Rules 210.12(c)(1));

16. One (1) copy of the prosecution history of the '691 patent identified as Appendix G in the Complaint and four (4) additional copies on separate CDs. A certified copy of the prosecution history of the '691 patent will be submitted upon receipt. (Commission Rules 210.12(c)(1));

17. One (1) certified copy of the prosecution history of the '337 patent identified as Appendix F in the Complaint and four (4) additional copies on separate CDs. (Commission Rules 210.12(c)(1));

18. One (1) certified copy of the prosecution history of the '398 patent identified as Appendix G in the Complaint and four (4) additional copies on separate CDs. (Commission Rules 210.12(c)(1));

19. Four (4) copies of each relevant cited reference identified in the prosecution histories of the asserted patents, identified as Appendices H-N in the Complaint (Commission Rule 210.12(c)(2));

20. Physical samples of: the ResMed S9 Flow Generator and H5i Humidifier, identified as Exhibit P1 in the Complaint; the ResMed Mirage Quattro Full Face Mask, identified as Exhibit P2 in the Complaint; the Apex WiZARD 210 Nasal Mask with Headgear, identified as Exhibit P3 in the Complaint; the Apex WiZARD 220 Full Face Mask with Headgear, identified as Exhibit P4 in the Complaint; the Apex XT Series Continuous Positive Airway Pressure, identified as Exhibit P5 in the Complaint; the APEX iCH CPAP Series, identified as Exhibit P6 in the Complaint; and the Drive Freedom 210 nasal CPAP mask with small, medium & large cushions, identified as Exhibit P7 in the Complaint; and

21. A letter of certification pursuant to Commission Rules 201.6(b) and 210.5(d) requesting confidential treatment of information appearing in Confidential Exhibits 56, 89 and 90 to the verified Complaint.

Respectfully submitted,

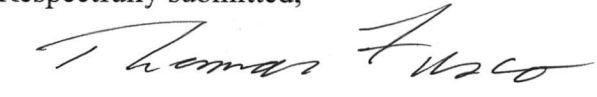

Thomas Fusco

Counsel for ResMed Corp., ResMed Inc., and ResMed Ltd

Enclosures

FISH & RICHARDSON P.C.

1425 K STREET, N.W.
11TH FLOOR
WASHINGTON, DC 20005

Frederick P. Fish
1855-1930

W.K. Richardson
1859-1951

Telephone
202 783-5070

Facsimile
202 783-2331

Web Site
www.fr.com

VIA HAND DELIVERY

March 28, 2013

The Honorable Lisa R. Barton
Acting Secretary
U.S. International Trade Commission
500 E Street, S.W.
Washington, D.C. 20436

FR

ATLANTA
AUSTIN
BOSTON
DALLAS
DELAWARE
NEW YORK
SAN DIEGO
SILICON VALLEY
TWIN CITIES
WASHINGTON, DC

Re: Certain Sleep-Disordered Breathing Treatment Systems And Components Thereof, Inv. No. 337-TA-__

Dear Secretary Barton:

In accordance with 19 C.F.R. §§ 201.8(g) and 210.5, ResMed Corp., ResMed Inc., and ResMed Ltd, (collectively "ResMed") request confidential treatment for the business information contained in Confidential Exhibits 56, 89 and 90.

The information for which confidential treatment is sought is proprietary commercial information not otherwise publicly available. Specifically, Confidential Exhibits 56 contains proprietary information regarding Complainants' domestic industry, including information relating to the financial performance and commercial operations of Complainants, sales and marketing information, inventories, and other information of commercial value to Complainants. Exhibits 89 and 90 similarly contain proprietary commercial information regarding Complainant's licensing of the asserted patents.

The information described above qualifies as confidential business information pursuant to Rule 210.6(a) because:

1. It is not publicly available ;

2. Unauthorized disclosure of such information could cause substantial harm to the competitive position of ResMed; and

3. The disclosure of such information could impair the Commission's ability to obtain information necessary to perform its statutory function.

Please contact me if you have any questions about this request, or if this request is not granted in full.

Respectfully submitted,

Thomas Fusco

Thomas Fusco

Counsel for ResMed Corp., ResMed Inc., and ResMed Ltd

Enclosures

UNITED STATES INTERNATIONAL TRADE COMMISSION
WASHINGTON, D.C. 20436

In the Matter of CERTAIN SLEEP-DISORDERED BREATHING TREATMENT SYSTEMS AND COMPONENTS THEREOF	Investigation No. 337-TA-____

RESMED COMPLAINANTS' STATEMENT ON THE PUBLIC INTEREST

Pursuant to U.S. International Trade Commission ("Commission") Rule § 210.8(b), Complainants ResMed Corp., ResMed Inc., and ResMed Ltd ("ResMed" or "Complainants") submit this Statement on the Public Interest with respect to the remedial orders it seeks against Respondents Apex Medical Corp., Apex Medical USA Corp., and Medical Depot Inc., d/b/a Drive Medical Design & Manufacturing (collectively, "Respondents").

ResMed seeks a limited exclusion order specifically directed to each named Respondent excluding from entry into the United States certain sleep disordered breathing treatment systems and components thereof that infringe U.S. Patent No. 7,159,587, entitled "Respiratory Mask Having Gas Washout Vent And Gas Washout Vent Assembly For Respiratory Mask," ("the '587 patent"), U.S. Patent No. 7,487,772, entitled "Ergonomic And Adjustable Respiratory Mask Assembly With Elbow Assembly," ("the '772 patent"), U.S. Patent No. 7,997,267, entitled "Ergonomic And Adjustable Respiratory Mask Assembly With Elbow Assembly," ("the '267 patent"), U.S. Patent No. 7,743,767, entitled "Ergonomic And Adjustable Respiratory Mask Assembly With Frame," ("the '767 patent"), U.S. Patent No. 6,216,691, entitled "Mounting Body," ("the '691 patent"), U.S. 6,935,337, entitled "Humidifier With Structure To Prevent Backflow Of Liquid Through The Humidifier Inlet," ("the '337 patent"), or U.S. Patent No.

7,614,398, "Humidifier With Structure To Prevent Backflow Of Liquid Through The Humidifier Inlet," ("the '398 patent") (collectively, "the Asserted Patents"). ResMed also seeks a permanent cease and desist order, pursuant to Section 337(f), halting the importation, sale, offer for sale, marketing, advertising, or soliciting of sleep disordered breathing treatment systems and components thereof by Respondents and their related companies that infringe the Asserted Patents. Issuance of the relief requested will not adversely impact the public health, safety, or welfare conditions in the United States, competitive conditions in the United States economy, the production of like or directly competitive articles in the United States, or United States consumers. Thus, this Investigation does not present an instance where the Commission, the parties, and the public should be required to undergo the time and expense of discovery and trial for a Recommended Determination by the ALJ on the public interest.

Issuance of the requested remedial orders will provide effective relief in the face of ongoing and open patent infringement in the United States by the proposed Respondents. Protecting ResMed's intellectual property rights and associated domestic industry in the United States through the requested remedial orders will accordingly serve the public interest while having little or no adverse effect on the public interest. In fact, the public interest is served by granting the requested remedial orders.

I. THE REQUESTED REMEDIAL ORDERS ARE IN ACCORD WITH THE PUBLIC INTEREST

There is a strong public interest in protecting intellectual property rights. *Certain Baseband Processor Chips and Chipsets, Transmitter and Receiver (Radio) Chip, Power Control Chips*, Inv. No. 337-TA-543, USITC Pub. 4258 (Nov. 2011) ("Baseband Processor Chips"). In this case, the requested remedial orders are in accord with the public interest for at least the following reasons: (1) exclusion of the accused products will not have an adverse effect on the

public health or welfare, as those issues are defined by the Commission; (2) ResMed's sleep-disordered breathing treatment systems and components thereof directly compete with, and are substitutes for, Respondents' infringing products in the United States; (3) only a small subset of the industry selling or offering for sale certain sleep-disordered breathing treatment systems and components thereof in the United States would be barred; and (4) ResMed and third parties will be in a position to fill any void in the market caused by the requested remedial orders. As such, the public interest in protecting ResMed's intellectual property rights outweighs any potentially adverse impact on the public.

A. How the articles potentially subject to the remedial orders are used in the United States

The accused products at issue in this Investigation are certain sleep-disordered breathing treatment systems and components thereof. The accused products are used primarily in the treatment of obstructive sleep apnea by delivering pressurized air to the user in a way that keeps the user's breathing passages open during sleep. The accused products are commonly referred to as "CPAP" systems, an acronym that stands for "continuous positive airway pressure." CPAP systems generally consist of a flow generator, a flexible connector such as a hose, an interface such as a mask for delivering the pressurized air to the user, and an optional humidifier.

Each of the accused products infringes ResMed's patent rights. The infringing products are imported into, sold for importation into, and/or sold after importation in the United States by or on behalf of the Respondents identified in the Complaint.

B. Identification of any public health, safety, or welfare concerns in the United States relating to the requested remedial orders

The issuance of the requested remedial orders would not adversely affect the public health, safety, or welfare in the United States. While Respondents' products are used in the treatment of obstructive sleep apnea, their products represent a small portion of the market. The

number of patients who would be affected by remedial orders directed to Respondents' infringing products is relatively small, and ResMed is more than capable of supplying substitutes for Respondents' excluded products, thus overriding any concerns regarding whether the remedial orders would adversely affect the public health. Moreover, because the infringing sleep-disordered breathing treatment systems and components thereof represent a relatively small amount of the U.S. market, any remedial orders will not have a significant effect on the market for such products as products are otherwise available from ResMed and other sources.

C. Identification of like or directly competitive articles that ResMed, its licensees, or third parties make which could replace the subject articles if they were excluded

The accused products in this Investigation are certain sleep-disordered breathing treatment systems and components thereof. There are directly competitive products that could replace the accused products if the accused products were excluded from the United States, including, but not limited to, ResMed's Quattro FX, Quattro FX For Her, Mirage Vista, Mirage Quattro, Mirage Micro, Mirage FX, Mirage FX For Her, Mirage Liberty, and Mirage Activa LT masks; the S9 and other models of flow generators; and the H5i and other models of heated humidifiers.

D. ResMed, its licensees, and/or third parties will be in a position to replace the volume of articles subject to the requested remedial orders in a commercially reasonable time in the United States

ResMed and/or other manufacturers, some of whom are large companies, have sold and continue sell competitive sleep-disordered breathing treatment systems and components thereof in the United States that are similar to the infringing products that are the subject of the Complaint. Therefore, ResMed and/or other manufacturers will be able to replace the infringing products subject to the requested remedial orders within a commercially reasonable time in the United States.

E. The requested remedial orders will not adversely impact U.S. consumers

The issuance of exclusion and cease and desist orders in this Investigation banning the accused products will not adversely impact consumers in the United States. ResMed will be able to adequately supply and meet the demand of the United States market. In addition, there are other third parties that supply competitive products to the United States market. Even if the remedial orders caused a slight increase in the price of certain sleep-disordered breathing treatment systems and components thereof, a price increase alone is insufficient to warrant preclusion of a remedial order. *See Certain Lens-Fitted Film Packages ("LFFPs")*, Inv. No. 337-TA-406, Comm'n. Op., 1999 ITC LEXIS 202 at *40 (June 28, 1999) (finding that some price increase "does not justify a determination that the public interest in protecting intellectual property rights is in any way outweighed"). Given that there would be no unfilled void because there are substitute products, including those made and sold by ResMed and other parties that could replace the volume of the excluded articles, any impact to the public interest by the exclusion of Respondents' infringing products will be minimal.

II. CONCLUSION

If the Commission grants the requested remedial orders, the public interest will be served. Exclusion of the accused products will not adversely affect the public health or welfare, and an adequate supply of substitute devices will be available through at least ResMed and other parties. As such, the strong public interest in protecting ResMed's valid intellectual property rights outweighs any adverse impact on the public.

Respectfully submitted,

FISH & RICHARDSON P.C.

Dated: March 28, 2013

By: Thomas Fusco

Roger Denning
Scott Penner
FISH & RICHARDSON P.C.
12390 El Camino Real
San Diego, CA 92130
Telephone: (858) 678-5070
Facsimile: (858) 678-5099

Thomas "Monty" Fusco
W. Peter Guarnieri
FISH & RICHARDSON P.C.
1425 K Street, N.W., 11th Floor
Washington, D.C. 20005
Telephone: (202) 783-5070
Facsimile: (202) 783-2331

Frank E. Scherkenbach
FISH & RICHARDSON P.C.
One Marina Park Drive
Boston, MA 02210-1878
Telephone: (617) 542-5070
Facsimile: (617) 542-8906

Michael J. Kane
FISH & RICHARDSON P.C.
3200 RBC Plaza
60 South Sixth Street
Minneapolis, MN 55402
Telephone: (612) 335-5070
Facsimile: (612) 288-9696

Counsel for Complainants
ResMed Corp., ResMed Inc.,
and ResMed Ltd

UNITED STATES INTERNATIONAL TRADE COMMISSION
WASHINGTON, D.C. 20436

In the Matter of CERTAIN SLEEP-DISORDERED BREATHING TREATMENT SYSTEMS AND COMPONENTS THEREOF	Investigation No. 337-TA-____

COMPLAINT OF RESMED LTD, RESMED INC., AND RESMED CORP. UNDER SECTION 337 OF THE TARIFF ACT OF 1930, AS AMENDED

COMPLAINANTS

ResMed Corp
9001 Spectrum Center Drive
San Diego, CA 92123
USA
Telephone: (858)-836-5000

ResMed Inc.
9001 Spectrum Center Drive
San Diego, CA 92123
USA
Telephone: (858)-836-5000

ResMed Ltd
1 Elizabeth Macarthur Drive
Bella Vista NSW 2153
Australia
Telephone: +61 (2) 8884 1000

PROPOSED RESPONDENTS

Apex Medical Corp.
No. 9, Min Sheng St.
Tu-Cheng, New Taipei City, 23679
Taiwan
Telephone: +886-222685568

Apex Medical USA Corp.
615 N. Berry St. Suite D
Brea, CA 92821,
USA
Telephone: (714)-671-3818

Medical Depot Inc., d/b/a Drive Medical Design & Manufacturing
99 Seaview Blvd Ste 210
Port Washington, NY 11050
USA
Telephone: (516)-998-4600

COUNSEL FOR COMPLAINANT

Roger Denning
Scott Penner
FISH & RICHARDSON P.C.
12390 El Camino Real
San Diego, CA 92130
Telephone: (858)-678-5070
Fax: (858)-678-5099

Thomas "Monty" Fusco
W. Peter Guarnieri
FISH & RICHARDSON P.C.
1425 K Street, N.W., 11th Floor
Washington, D.C. 20005
Telephone: (202) 783-5070
Fax: (202) 783-2331

Frank E. Scherkenbach
FISH & RICHARDSON P.C.
One Marina Park Drive
Boston, MA 02210-1878
Telephone: (617)-542-5070
Fax: (617)-542-8906

Michael J. Kane
FISH & RICHARDSON P.C.
3200 RBC Plaza
60 South Sixth Street
Minneapolis, MN 55402
Telephone: (612)-335-5070
Fax: (612)-288-9696

TABLE OF CONTENTS

I. INTRODUCTION 11

II. COMPLAINANTS 13

III. PROPOSED RESPONDENTS 15

IV. PRODUCTS AND TECHNOLOGY AT ISSUE 16

V. THE ASSERTED PATENTS 18

A. U.S. Patent No. 7,159,587 21
1. Identification of the Patent and Ownership by ResMed 21
2. Non-Technical Description of the Patented Invention 22
3. Foreign Counterparts to the '587 Patent 22

B. U.S. Patent Nos. 7,487,772 and 7,997,267 22
1. Identification of the Patents and Ownership by ResMed 22
2. Non-Technical Description of the Patented Invention 23
3. Foreign Counterparts to the '772 Patent 24
4. Foreign Counterparts to the '267 Patent 25

C. U.S. Patent No. 7,743,767 25
1. Identification of the Patents and Ownership by ResMed 25
2. Non-Technical Description of the Patented Invention 25
3. Foreign Counterparts to the '767 Patent 26

D. U.S. Patent No. 6,216,691 26
1. Identification of the Patent and Ownership by ResMed 27
2. Non-Technical Description of the Patented Invention 27
3. Foreign Counterparts to the '691 Patent 28

E. U.S. Patent Nos. 6,935,337 and 7,614,398 28
1. Identification of the Patents and Ownership by ResMed 28
2. Non-Technical Description of the Patented Invention 29
3. Foreign Counterparts to the '337 Patent 31
4. Foreign Counterparts to the '398 Patent 31

VI. THE DOMESTIC INDUSTRY 31

VII. UNLAWFUL AND UNFAIR ACTS OF PROPOSED RESPONDENTS 35

A. Apex 35
B. Drive 38

VIII. SPECIFIC INSTANCES OF UNFAIR IMPORTATION AND SALE 40

IX. LICENSEES 42

X. RELATED LITIGATION 42

XI. REQUESTED RELIEF 42

LIST OF EXHIBITS

Exhibit Number	Description
1	Copy of U.S. Patent No. 7,159,587
2	Certified Copy of U.S. Patent No. 7,487,772
3	Certified Copy of U.S. Patent No. 7,997,267
4	Certified Copy of U.S. Patent No. 7,743,767
5	Certified Copy of U.S. Patent No. 6,216,691
6	Certified Copy of U.S. Patent No. 6,935,337
7	Certified Copy of U.S. Patent No. 7,614,398
8	Certified Assignment Documents for U.S. Patent No. 7,159,587
9	Certified Assignment Documents for U.S. Patent No. 7,487,772
10	Certified Assignment Documents for U.S. Patent No. 7,997,267
11	Certified Assignment Documents for U.S. Patent No. 7,743,767
12	Certified Assignment Documents for U.S. Patent No. 6,216,691
13	Certified Assignment Documents for U.S. Patent No. 6,935,337
14	Certified Assignment Documents for U.S. Patent No. 7,614,398
15	A List of All Foreign Patents and All Foreign Patent Applications Corresponding to U.S. Patent No. 7,743,767
16	A List of All Foreign Patents and All Foreign Patent Applications Corresponding to U.S. Patent No. 7,159,587
17	A List of All Foreign Patents and All Foreign Patent Applications Corresponding to U.S. Patent No. 7,487,772
18	A List of All Foreign Patents and All Foreign Patent Applications Corresponding to U.S. Patent No. 7,743,767
19	A List of All Foreign Patents and All Foreign Patent Applications Corresponding to U.S. Patent No. 6,216,691
20	A List of All Foreign Patents and All Foreign Patent Applications Corresponding to U.S. Patent No. 6,935,337
21	A List of All Foreign Patents and All Foreign Patent Applications Corresponding to U.S. Patent No. 7,614,398
22	Photographs of the ResMed Mirage Activa LT
23	Photographs of the ResMed Liberty
24	Photographs of the ResMed Mirage Micro
25	Photographs of the ResMed Mirage Quattro
26	Photograph of the ResMed Mirage Vista
27	Photographs of the ResMed Quattro FX and Quattro FX For Her
28	Photographs of the ResMed S9 Autoset and H5i

Exhibit Number	Description
29	User Manuals for the ResMed Mirage Activa LT
30	User Manuals for the ResMed Mirage Liberty
31	User Manuals for the ResMed Mirage Micro
32	User Manuals for the ResMed Mirage Quattro
33	User Manuals for the ResMed Mirage Vista
34	User Manuals for the ResMed Quattro FX and Quattro FX For Her
35	User Manuals for the ResMed S9 Autoset and H5i
36	RESERVED
37	Exemplary Claim Chart Comparing the Claims of the '587 patent to the ResMed Mirage Quattro
38	Exemplary Claim Chart Comparing the Claims of the '587 patent to the ResMed Quattro FX and Quattro FX For Her
39	Exemplary Claim Chart Comparing the Claims of the '772 patent to the ResMed Mirage Activa LT
40	RESERVED
41	Exemplary Claim Chart Comparing the Claims of the '772 patent to the ResMed Mirage Micro
42	Exemplary Claim Chart Comparing the Claims of the '772 patent to the ResMed Mirage Quattro
43	Exemplary Claim Chart Comparing the Claims of the '772 patent to the ResMed Mirage Vista
44	Exemplary Claim Chart Comparing the Claims of the '772 patent to the ResMed Quattro FX and Quattro FX For Her
45	Exemplary Claim Chart Comparing the Claims of the '267 patent to the ResMed Mirage Activa LT
46	RESERVED
47	Exemplary Claim Chart Comparing the Claims of the '267 patent to the ResMed Mirage Micro
48	Exemplary Claim Chart Comparing the Claims of the '267 patent to the ResMed Mirage Quattro
49	Exemplary Claim Chart Comparing the Claims of the '267 patent to the ResMed Mirage Vista
50	Exemplary Claim Chart Comparing the Claims of the '267 patent to the ResMed Quattro FX and Quattro FX For Her

Exhibit Number	Description
51	Exemplary Claim Chart Comparing the Claims of the '767 patent to the ResMed Mirage Vista
52	RESERVED
53	Exemplary Claim Chart Comparing the Claims of the '691 patent to the ResMed S9 Autoset
54	Exemplary Claim Chart Comparing the Claims of the '337 patent to the ResMed H5i heated humidifier.
55	Exemplary Claim Chart Comparing the Claims of the '398 patent to the ResMed H5i heated humidifier.
56	CONFIDENTIAL EXHIBIT: Declaration of Ben Cheah
57	Photographs of the Apex WiZARD 210
58	Photographs of the Apex's WiZARD 220
59	Photographs of the Apex XT-Fit
60	Photographs of the Apex XT Humidifier
61	Photographs of the Apex iCH Auto
62	User Brochure for the Apex WiZARD 210 and Apex WiZARD 220
63	User Brochure for the Apex iCH Auto
64	User Brochure for the Apex XT-Fit and XT Humidifier
65	Exemplary Claim Chart Comparing the Claims of the '587 patent to the Apex WiZARD 210 and Drive Freedom 210
66	Exemplary Claim Chart Comparing the Claims of the '587 patent to the Apex WiZARD 220 and Drive Freedom 220
67	Exemplary Claim Chart Comparing the Claims of the '772 patent to the Apex WiZARD 210 and Drive Freedom 210
68	Exemplary Claim Chart Comparing the Claims of the '772 patent to the Apex WiZARD 220 and Drive Freedom 220
69	Exemplary Claim Chart Comparing the Claims of the '267 patent to the Apex WiZARD 210 and Drive Freedom 210
70	Exemplary Claim Chart Comparing the Claims of the '267 patent to the Apex WiZARD 220 and Drive Freedom 220
71	Exemplary Claim Chart Comparing the Claims of the '767 patent to the Apex WiZARD 210 and Drive Freedom 210
72	Exemplary Claim Chart Comparing the Claims of the '691 patent to the Apex XT-Fit
73	Exemplary Claim Chart Comparing the Claims of the '691 patent to the Apex iCH Auto
74	Exemplary Claim Chart Comparing the Claims of the '337 patent to the Apex iCH

Exhibit Number	Description
	Auto
75	Exemplary Claim Chart Comparing the Claims of the '398 patent to the Apex XT Humidifier
76	Photographs of Drive Freedom 210
77	Photographs of Drive Freedom 220
78	Photographs of the Product Packaging for the Apex WiZARD 220 and WiZARD 220
79	ResMed Inc.'s Annual Report and Form 10-K
80	Drive Medical Catalog Page
81	Apex import data from www.zepol.com
82	Photographs of the Product Packaging for the Drive Freedom 210
83	Photographs of the Drive Freedom 210 with WiZARD 210 branding.
84	WiZARD 210 Instruction Manual
85	WiZARD 220 Instruction Manual
86	iCH Auto Instruction Manual
87	XT Fit Instruction Manual
88	XT Heated Humidifier Instruction Manual
89	CONFIDENTIAL EXHIBIT: Copies of ResMed Inc. and ResMed Corp. Licenses of Asserted Patents
90	CONFIDENTIAL EXHIBIT: List of all licensees to the ResMed Asserted Patents

Physical Exhibit Number	Description
P1	ResMed S9 Flow Generator and H5i Humidifier
P2	ResMed Mirage Quattro Full Face Mask
P3	Apex WiZARD 210 Nasal Mask with Headgear
P4	Apex WiZARD 220 Full Face Mask with Headgear
P5	Apex XT Series Continuous Positive Airway Pressure

Physical Exhibit Number	Description
P6	APEX iCH CPAP Series
P7	Drive Freedom 210 nasal CPAP mask with small, medium & large cushions

LIST OF APPENDICES

Appendix	Description
A	Certified Copy of the File History for U.S. Patent No. 7,159,587
B	Certified Copy of the File History for U.S. Patent No. 7,487,772
C	Certified Copy of the File History for U.S. Patent No. 7,997,267
D	Certified Copy of the File History for U.S. Patent No. 7,743,767
E	Copy of the File History for U.S. Patent No. 6,216,691
F	Certified Copy of the File History for U.S. Patent No. 6,935,337
G	Certified Copy of the File History for U.S. Patent No. 7,614,398
H	Relevant Technical References Cited in U.S. Patent No. 7,159,587
I	Relevant Technical References Cited in U.S. Patent No. 7,487,772
J	Relevant Technical References Cited in U.S. Patent No. 7,997,267
K	Relevant Technical References Cited in U.S. Patent No. 7,743,767
L	Relevant Technical References Cited in U.S. Patent No. 6,216,691
M	Relevant Technical References Cited in U.S. Patent No. 6,935,337
N	Relevant Technical References Cited in U.S. Patent No. 7,614,398

I. INTRODUCTION

1.1 ResMed Corp., ResMed Inc., and ResMed Ltd (sometimes collectively referred to as "ResMed" or "Complainants") request that the United States International Trade Commission commence an investigation pursuant to Section 337 of the Tariff Act of 1930, as amended, 19 U.S.C. § 1337 ("Section 337"), to remedy the unlawful importation into the United States, sale for importation into the United States, and/or sale within the United States after importation by the owner, importer, or consignee, of certain sleep-disordered breathing treatment systems and components thereof (collectively referred to as "the accused products"), that infringe valid and enforceable United States patents owned by ResMed Ltd, and licensed to ResMed Inc. and ResMed Corp.

1.2 This Complaint is based on Proposed Respondents' unlawful and unauthorized importation into the United States, sale for importation, and/or sale within the United States after importation, of certain sleep-disordered breathing treatment systems and components thereof. Respondents' products infringe at least one or more claims of U.S. Patent No. 7,159,587, entitled "Respiratory Mask Having Gas Washout Vent And Gas Washout Vent Assembly For Respiratory Mask," ("the '587 patent"), U.S. Patent No. 7,487,772, entitled "Ergonomic And Adjustable Respiratory Mask Assembly With Elbow Assembly," ("the '772 patent"), U.S. Patent No. 7,997,267, entitled "Ergonomic And Adjustable Respiratory Mask Assembly With Elbow Assembly," ("the '267 patent"), U.S. Patent No. 7,743,767, entitled "Ergonomic And Adjustable Respiratory Mask Assembly With Frame," ("the '767 patent"), U.S. Patent No. 6,216,691, entitled "Mounting Body," ("the '691 patent"), U.S. 6,935,337, entitled "Humidifier With Structure To Prevent Backflow Of Liquid Through The Humidifier Inlet," ("the '337 patent"), and U.S. Patent No. 7,614,398, "Humidifier With Structure To Prevent Backflow Of Liquid Through The Humidifier Inlet," ("the '398 patent") (collectively, "the Asserted Patents" or "the

ResMed Patents"). The ResMed Patents are valid and enforceable United States Patents, the entire right, title, and interest in and to which ResMed Ltd owns by assignment.

1.3 ResMed asserts that the accused products infringe claims 1, 5, 6, 11, 12, 18, 19, 20, 35 and 36 of the '772 patent; claims 17, 21, 22, 23, 24, 29, 32, 33, 34, 35, 36, and 37 of the '267 patent; claim 15 of the '587 patent; claims 59, 60, 63, 72, 73, 74, and 75 of the '767 patent; claims 1, 2, 4, 5, 17 and 28 of the '691 patent; claims 1 and 20 of the '337 patent; and claims 1, 2, 3, 4, 5, 6 and 7 of the '398 patent; (collectively, "the asserted claims"). In summary, Proposed Respondents infringe at least the patents and claims listed in the chart below (dependent claims are contained in parentheses).

U.S Patent No.	Asserted Claims
'587 patent	15
'772 patent:	1 (5, 6, 11); 12; 18 (19-20); 35; 36
'267 patent	17; 21 (22, 23, 24, 29); 32 (33, 34, 35, 36, 37)
'767 patent	59 (60, 63,72, 73, 74, 75)
'691 patent	1 (2, 4, 5, 17); 28
'337 patent	1; 20
'398 patent	1 (2, 3, 4, 5, 6, 7)

1.4 Proposed Respondents' activities with respect to the importation into the United States, the sale for importation into the United States, and/or the sale within the United States after importation of certain sleep-disordered breathing treatment systems and components thereof, described more fully, *infra*, are unlawful under 19 U.S.C. § 1337(a)(l)(B)(i), in that these systems are protected by one or more claims of the valid and enforceable ResMed Patents.

1.5 Certified copies of the Asserted Patents accompany this Complaint as Exhibits 1-7 respectively.[1] ResMed Ltd owns by assignment the entire right, title, and interest in and to these patents. A certified copy of each of the recorded assignments accompanies this Complaint as Exhibits 8-14. Each of the Asserted Patents is licensed to ResMed Inc. and sublicensed to ResMed Corp.

1.6 As required by Section 337(a)(2) and defined in Section 337(a)(3), an industry in the United States exists relating to articles protected by the Asserted Patents.

1.7 ResMed seeks relief from the Commission in the form of a permanent exclusion order, pursuant to Section 337(d), excluding from entry into the United States Proposed Respondents' accused products that infringe one or more claims of the Asserted Patents. ResMed also seeks a permanent cease and desist order, pursuant to Section 337(f), halting the importation, sale, offer for sale, marketing, advertising, or soliciting of sleep-disordered breathing treatment systems and components thereof by Proposed Respondents and their related companies that infringe ResMed's valid and enforceable United States patents.

II. COMPLAINANTS

2.1 Complainant ResMed Ltd is a corporation organized under the laws of Australia, having its principal place of business in Bella Vista, New South Wales, Australia. ResMed Ltd owns the patents at issue in this complaint. Complainant ResMed Corp. is a corporation organized under the laws of the state of Minnesota with its principal place of business in San Diego, California. Complainant ResMed Inc. is a corporation organized under the laws of the state of Delaware with its principal place of business in San Diego, California. ResMed Ltd

[1] ResMed notes that Exhibit 1 is an un-certified copy of the '587 patent. At the time of filing of the complaint, a certified copy of the '587 patent had been ordered. In accordance with Rule 210(a)(9)(i), a certified copy of the '587 patent will be filed with the Commission when received by Complainants.

licenses the patents at issue to ResMed Inc. which in turn licenses them to ResMed Corp. The Complainants are sometimes collectively referred to as "ResMed" herein. ResMed Corp. and ResMed Ltd are, respectively, direct and indirect subsidiaries of ResMed Inc.

2.2 ResMed is a leading developer, manufacturer and distributor of medical equipment for treating, diagnosing, and managing sleep-disordered breathing and other respiratory disorders. The company is dedicated to developing innovative products to improve the lives of those who suffer from these conditions and to increasing awareness among patients and healthcare professionals of the potentially serious health consequences of untreated sleep-disordered breathing (sometimes referred to as "SDB"). Since its founding in 1989, ResMed has focused on developing and commercializing systems for the treatment of obstructive sleep apnea ("OSA"), a major subset of SDB. ResMed's development of innovative therapies for the treatment of OSA has resulted in over 3,000 patents granted or pending worldwide, and its product line incorporates technology that is a highly effective and proven way to treat OSA.

2.3 ResMed was originally founded in Australia, but is now a U.S. corporation with its parent, ResMed Inc., incorporated in Delaware and headquartered in San Diego. ResMed Ltd is principally responsible for ResMed's research and manufacturing operations, which are located in various places around the world. ResMed Inc.'s principal Americas sales subsidiary, ResMed Corp., is co-located in San Diego with the parent company. ResMed Motor Technologies is a wholly owned subsidiary of ResMed Inc., and is responsible for research, development and manufacturing of the motors that are used in ResMed's flow generators - the principal device used in the SDB systems that ResMed Ltd makes and ResMed Corp. sells.

2.4 ResMed Ltd has invested hundreds of millions of dollars in research and development. It has been estimated that SDB in general, and OSA in particular, affects

approximately 20% of the adult population, making it as widespread as diabetes or asthma. However, awareness of OSA is relatively low; one study in 2002 concluded that about 90% of people with OSA remain undiagnosed and untreated. Therefore, ResMed Corp., in particular, has made substantial investments directed to increasing education and awareness of the health consequences of untreated SDB among both the general public and physicians.

III. PROPOSED RESPONDENTS

3.1 On information and belief, proposed Respondent Apex Medical Corp. ("Apex Medical") is a corporation organized under the laws of the country of Taiwan with its principal place of business at No. 9, Min Sheng St., Tu-Cheng, New Taipei City, 23679, Taiwan. On information and belief, proposed Respondent Apex Medical USA Corp. ("Apex Medical USA") is the U.S. subsidiary of Apex Medical Corp. (collectively, "Apex"); Apex Medical USA Corp. is a corporation organized under the laws of the state of California with its principal place of business at 615 North Berry St, Suite D, Brea, CA 92821, USA.

3.2 As detailed below, on information and belief, Apex is a manufacturer and distributor of durable medical equipment, including systems and components thereof for the treatment of sleep-disordered breathing, such as obstructive sleep apnea.

3.3 Apex develops, manufactures, and markets sleep-disordered breathing treatment systems and components thereof that infringe one or more claims of the Asserted Patents. On information and belief, Apex's sleep-disordered breathing treatment systems and components thereof are manufactured, assembled, packaged, and/or tested outside of the United States. On information and belief, Apex and/or others then import the accused sleep-disordered breathing treatment systems, and components thereof into the United States, sell them for importation, or sell them in the United States after importation.

3.4 On information and belief, proposed Respondent Medical Depot Inc., d/b/a Drive Medical Design & Manufacturing ("Drive") is a corporation organized under the laws of the state of Delaware with its principal place of business at 99 Seaview Blvd, Ste 210, Port Washington, NY 11050, USA.

3.5 Drive is an importer and seller of durable medical equipment such as sleep-disordered breathing treatment systems and components thereof. Drive markets and sells these products in the United States. As set forth in more detail below, upon information and belief, Drive obtains sleep-disordered breathing treatment systems and components thereof from Apex, imports these systems and/or components into the United States, and sells these systems and/or components in the United States after importation.

IV. PRODUCTS AND TECHNOLOGY AT ISSUE

4.1 The products at issue are medical systems used in the treatment of sleep-disordered breathing ("SDB"), particularly obstructive sleep apnea ("OSA"). As the name implies, a person with OSA will experience obstructed breathing while sleeping as throat muscles relax and close off the breathing passage. After a period as long as ten seconds, the person will reopen the breathing passage by expelling air, only to have the passage close again as the throat muscles relax again, a cycle which may repeat itself several hundred times in the course of a night. The disrupted sleep pattern that results from having OSA not only causes the person to feel unrested after sleeping, but can cause a drop in blood oxygen levels, placing a strain on the person's overall respiratory and circulatory systems.

4.2 In the 1980's, Professor Colin Sullivan at Royal Prince Alfred Hospital in Sydney, Australia and Dr. George Gregory at the University of California, San Francisco began devising methods of treating OSA through the use of continuous positive airway pressure, or "CPAP." CPAP therapy involves the use of mild air pressure to keep the patient's airway open

during sleep. A CPAP therapy system consists of three main elements working together: 1) a flow generator for creating the flow of air, 2) a conduit, usually a flexible tube, for carrying the flow of air to the patient, and 3) an interface (usually a facial mask or a pair of "nasal pillows" that are inserted into the nasal cavities) that provides a connection to the patient's airway. The continuous flow of air prevents the airway from collapsing during sleep and thus disrupts the OSA cycle described above, leading the patient to a good night's sleep uninterrupted by apneas.

ResMed CPAP Machine in Use

4.3 The success of CPAP therapy in the treatment of OSA has been widely recognized. Indeed, the University of Maryland Medical Center describes CPAP as the "first-line treatment for mild-to-moderate or severe obstructive sleep apnea."[2]

4.4 The mask (or pair of nasal pillows) is a critical element of any CPAP therapy system. The mask must maintain an effective seal against the patient's face since air leakage can significantly reduce the therapeutic effects of the CPAP system. At the same time, if the mask is uncomfortable or constricting, the patient may find the system difficult to use and cease using the system altogether. Indeed, patient noncompliance with therapy because of mask discomfort is a

---

2 http://www.umm.edu/patiented/articles/continuous_positive_airflow_pressure_cpap_devices_used_sleep_apnea_000065_8.htm (accessed February 28, 2013)

major concern in the administration of CPAP therapy. This was pointed out in a study published in the journal *Sleep Science* in which it was reported that the most common side effects of CPAP therapy that influence adherence to the treatment are related to nasal complaints, masks, and pressures.[3]

4.5 ResMed offers a range of flow generators and masks designed to maximize the efficacy of the CPAP therapy delivered. A complete depiction of ResMed's products, designed to treat OSA in a myriad of patient types across the population, can be found at http://www.resmed.com/products.

4.6 The accused Apex masks are sold under the brand name "WiZARD". The WiZARD 210 mask is intended to cover only the nose, while the WiZARD 220 mask covers more of the face and is commonly referred to as a "full face" mask. Upon information and belief, Drive imports Apex masks and sells them under its own brand name but with the same numerical designation of the corresponding Apex masks – the Drive products are the Freedom 210 nasal mask and Freedom 220 full face mask. Upon information and belief, Apex has recently begun selling the accused products in the US directly to durable medical equipment providers, as well as selling through Drive.

V. THE ASSERTED PATENTS

5.1 At issue in this investigation is Proposed Respondents' infringement of seven United States patents: the '587, '772, '767, '267, '691, '337, and '398 patents. ResMed summarizes the general technology of all the inventions as well as each patent below.

A. General Background

[3] A.D. Rueda et al., "Improving CPAP Compliance by a Basic Educational Program with Nurse Support for Obstructive Sleep Apnea Syndrome Patients," *Sleep Science*, 2009 2(1): 8-13

5.2 As noted previously, sleep-disordered breathing ("SDB"), particularly obstructive sleep apnea ("OSA"), can lead to serious and harmful effects on a person's overall respiratory and circulatory systems. One manner of treating these disorders is through the use of Continuous Positive Airway Pressure ("CPAP") treatments. During CPAP treatment air is continually supplied into a patient's airways at pressures above the ambient atmospheric pressure while the patient sleeps. This higher pressure air helps keep the patient's airways open, thereby ensuring a steady supply of oxygen and helping a patient achieve a more restful and healthy sleep. Various different types of CPAP treatment may involve different cycles or levels of pressure during the course of a single treatment (i.e. over the course of single sleeping period). The air is supplied by an air flow generator, through an air conduit, and into a patient interface that generally consists of a mask. Other examples of patient interfaces include a full face mask and nasal prongs or pillows.

5.3 The innovative construction and design of masks used to deliver air during CPAP and related treatments are one subject of the patents-in-suit. The masks generally consist of a mask shell attached to a conduit of some kind, with for example an elbow joint:

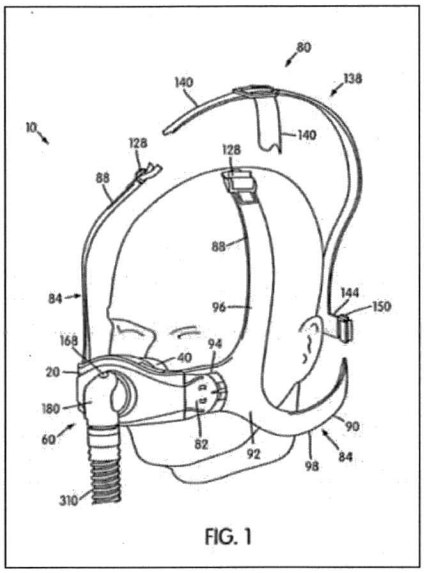

See e.g. **Exhibit 2, '772 patent, at Fig. 1**

5.4 The mask shell includes a cushion or padding so that it rests comfortably on a patient's face when in contact with the patient's nose and mouth. The mask may be secured onto a patient's head with a harness consisting of straps. It may also include other support structures, such as a forehead pad to comfortably brace the mask against the patient's forehead. The mask will also generally include a vent for exhaling exhaust gas when a patient breathes out; this vent will usually be located on or near the mask shell itself.

5.5 As previously noted, air is provided to the patient by a flow generator. The flow generator generally uses an electric motor driving a fan or turbine to create the high pressure air that is supplied to the mask. ResMed's patented inventions involve an innovative housing and mounting body for the flow generator. This mounting body helps to minimize the noise produced by the generator while still being economic to manufacture and service. Additionally, because some patients prefer to use humidified air during CPAP treatment, ResMed's patented inventions also involve the design of humidifiers to humidify the air supplied to the mask.

5.6 Descriptions of the patents asserted in this complaint are set forth in the remainder of this section. The contents of this Complaint, including the subsections entitled "Non-Technical Description of the Patented Invention", does not, and is not intended to, construe either the specification or claims of the patents asserted herein.

A. U.S. Patent No. 7,159,587

1. Identification of the Patent and Ownership by ResMed

5.7 ResMed Ltd owns by assignment the entire right, title, and interest in the '587 patent entitled "Respiratory Mask Having Gas Washout Vent And Gas Washout Vent Assembly For Respiratory Mask," which issued on January 09, 2007. The '587 patent issued from U.S. Patent Application Serial No. 10/976,874, filed on November 1, 2004. The '587 is a continuation of U.S. Patent Application Serial No. 10/377,110, filed on March 3, 2003, now U.S. Patent No. 6,823,865, which is a continuation of U.S. Patent Application Serial No. 09/570,907, filed on May 15, 2000, now U.S. Patent No. 6,581,594. ResMed Inc. is the exclusive licensee of the '587 patent and has sublicensed the patent to ResMed Corp., the US sales subsidiary.

5.8 The inventors of the '587 patent, Joanne Drew, Alexander Virr, and Geoffrey Crumblin, assigned to ResMed Ltd all rights, title, and interest in the invention ultimately disclosed and claimed in the '587 patent. *See* Exhibit 8. The '587 patent is valid, enforceable, and is currently in full force and effect. A copy of the '587 patent is attached as Exhibit 1.[4]

5.9 Pursuant to Rule 210.12(c) of the Commission's Rules of Practice and Procedure, this Complaint is accompanied by Appendices A and H. Appendix A contains a certified copy and three additional copies of the prosecution history of the '587 patent. Appendix H contains four copies of each reference mentioned in that prosecution history.

[4] At the time of filing of the complaint, a certified copy of the '587 patent had been ordered. In accordance with Rule 210(a)(9)(i), a certified copy of the '587 patent will be filed with the Commission when received by Complainants.

2. Non-Technical Description of the Patented Invention

5.10 The '587 patent generally discloses a vent assembly for use with a respiratory mask of the type used in a CPAP machine. *See* Exhibit 1, '587 Patent at Abstract. Figure 1 of the '587 patent depicts one embodiment of this vent assembly included on a respiratory mask:

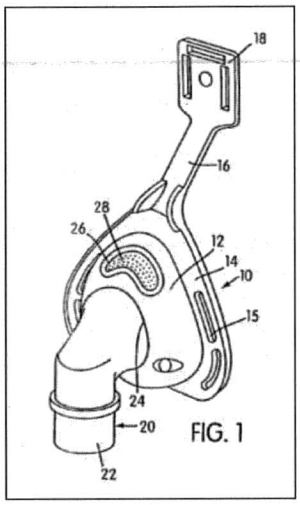

***See id.* at Fig. 1**

5.11 The vent is generally used to eliminate CO_2 by a patient, and is sometimes referred to as a gas washout vent or CO_2 washout vent. *See id.* at col. 1:62-65. The vent can be located in the mask shell (*see id.* at Fig. 1) or in the gas inlet (*see id.* at Fig. 2), and the vent can include a plurality of small holes, designed to allow gas to exit the breathing cavity quietly. *See id.* at col. 1:66 – col. 2:5.

3. Foreign Counterparts to the '587 Patent

5.12 The foreign counterparts to the '587 patent are listed in Exhibit 16. No other foreign patents or patent applications corresponding to the '587 patent have been filed, abandoned, withdrawn or rejected.

B. U.S. Patent Nos. 7,487,772 and 7,997,267

1. Identification of the Patents and Ownership by ResMed

5.13 ResMed Ltd owns by assignment the entire right, title, and interest in the '772 patent entitled "Ergonomic And Adjustable Respiratory Mask Assembly With Elbow Assembly," which issued February 10, 2009. The '772 patent issued from U.S. Patent Application Serial No. 10/390,720, filed on March 19, 2003. ResMed Ltd further owns by assignment the entire right, title, and interest in the '267 patent entitled "Ergonomic And Adjustable Respiratory Mask Assembly With Elbow Assembly," which issued on August 16, 2011. The '267 patent issued from U.S. Patent Application Serial No. 12/368,545, filed on February 10, 2009, and is a continuation of the '772 patent. ResMed Inc. is the exclusive licensee of the '772 and '276 patents and has sublicensed the patents to ResMed Corp., the US sales subsidiary.

5.14 The inventors of both the '772 and '267 patents, Anthony M. Ging, Saad Nasr, Rachael E. Moore, and Andrew M. Price, assigned to ResMed Ltd all rights, title, and interest in the invention ultimately disclosed and claimed in both the '772 and '267 patents. *See* Exhibits 9 and 10. The '772 and '267 patents are valid, enforceable, and are currently in full force and effect. A certified copy of the '772 patent is attached as Exhibit 2, and a certified copy of the '267 patent is attached as Exhibit 3.

5.15 Pursuant to Rule 210.12(c) of the Commission's Rules of Practice and Procedure, this Complaint is accompanied by Appendices B, C, I, and J. Appendix B contains a certified copy and three additional copies of the prosecution history of the '772 patent; Appendix I contains four copies of each reference mentioned in that prosecution history. Appendix C contains a certified copy and three additional copies of the prosecution history of the '267 patent; Appendix J contains four copies of each reference mentioned in that prosecution history.

2. Non-Technical Description of the Patented Invention

5.16 The '772 and '267 patents generally disclose a respiratory mask assembly for delivering breathable air to a patient. *See* Exhibit 2, '772 Patent, at Abstract, and Exhibit 3, '267 patent, at Abstract. An embodiment of the invention is pictured in Figure 1:

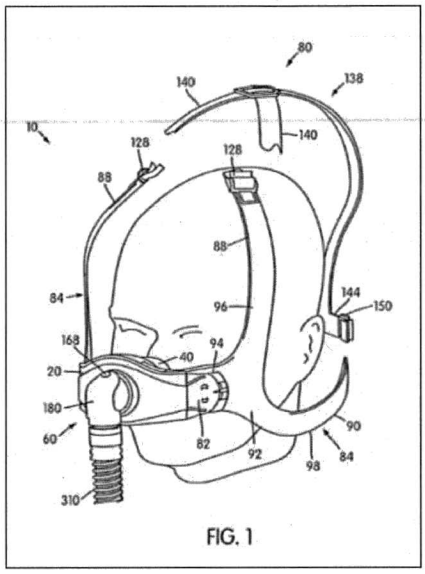

***See id.* at Fig. 1**

5.17 The frame includes both a front surface, as well as a rear surface adapted to face the patient. *See id.* at Abstract. A main body of the frame includes an opening for breathable gas to flow through and be introduced into the patient's nasal cavity. *See id.* The mask assembly also includes an elbow assembly connected to the front surface of the frame by a connector. *See id.* The elbow assembly is connected to the front surface in a way that allows it to swivel by using a swivel elbow. *See id.* Additionally, the swivel elbow has an air intake port and can have an air exhaust port, the two ports separated by a baffle. *See id.*

3. Foreign Counterparts to the '772 Patent

5.18 The foreign counterparts to the '772 patent are listed in Exhibit 17. No other foreign patents or patent applications corresponding to the '772 patent have been filed, abandoned, withdrawn or rejected.

4. Foreign Counterparts to the '267 Patent

5.19 The foreign counterparts to the '267 patent are listed in Exhibit 18. No other foreign patents or patent applications corresponding to the '267 patent have been filed, abandoned, withdrawn or rejected.

C. U.S. Patent No. 7,743,767

1. Identification of the Patents and Ownership by ResMed

5.20 ResMed Ltd owns by assignment the entire right, title, and interest in the '767 patent entitled "Ergonomic And Adjustable Respiratory Mask Assembly With Frame," which issued June 29, 2010. The '767 patent issued from U.S. Patent Application Serial No. 10/391,440, filed on March 19, 2003. ResMed Inc. is the exclusive licensee of the '767 patent and has sublicensed the patent to ResMed Corp., the US sales subsidiary.

5.21 The inventors of the '767 patent, Anthony M. Ging, Saad Nasr, Philip R. Kwok, Rachael E. Moore, and Andrew M. Price, assigned to ResMed Ltd all rights, title, and interest in the invention ultimately disclosed and claimed in the '767 patent. *See* Exhibit 11. The '767 patent is valid, enforceable, and is currently in full force and effect. A certified copy of the '767 patent is attached as Exhibit 4.

5.22 Pursuant to Rule 210.12(c) of the Commission's Rules of Practice and Procedure, this Complaint is accompanied by Appendices D and K. Appendix D contains a certified copy and three additional copies of the prosecution history of the '767 patent; Appendix K contains four copies of each reference mentioned in that prosecution history.

2. Non-Technical Description of the Patented Invention

5.23 The '767 patent generally discloses a respiratory mask assembly for delivering breathable air to a patient. *See* Exhibit 4, '767 Patent, at Abstract. An embodiment of the invention is pictured in Figure 36:

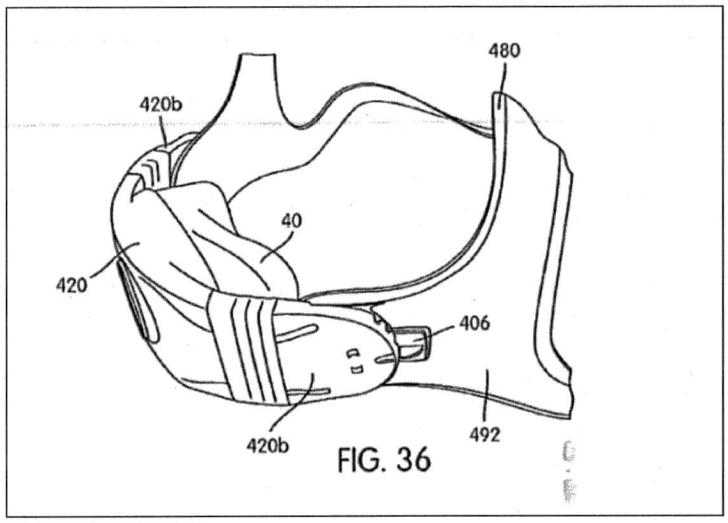

***See id.* at Fig. 36**

5.24 The frame includes both a front surface, as well as a rear surface opposite the front surface and adapted to face the patient. *See id.* at Abstract. The rear surface of the frame includes inner and outer walls that define a channel between them. *See id.* A cushion is provided that sits between the frame and the patient's face. *See id.* The cushion has a side wall that can be inserted into the channel of the frame. *See id.* Each of the cushion side wall and the channel have interlocking surfaces that engage each other in order to allow the cushion to be attached or detached from the frame. *See id.*

3. Foreign Counterparts to the '767 Patent

5.25 The foreign counterparts to the '767 patent are listed in Exhibit 15. No other foreign patents or patent applications corresponding to the '767 patent have been filed, abandoned, withdrawn or rejected.

D. U.S. Patent No. 6,216,691

1. Identification of the Patent and Ownership by ResMed

5.26 ResMed Ltd owns by assignment the entire right, title, and interest in the '691 patent entitled "Mounting Body," which issued on April 17, 2001. The '691 patent issued from U.S. Patent Application Serial No. 09/185,875, filed on November 3, 1998. ResMed Inc. is the exclusive licensee of the '691 patent and has sublicensed the patent to ResMed Corp., the US sales subsidiary.

5.27 The inventors of the '691 patent, Barton J. Kenyon, Alexander Virr, Marek T. Sapula, Philip R. Kwok, and Peter J.D. Wickham, assigned to ResMed Ltd all rights, title, and interest in the invention ultimately disclosed and claimed in the '691 patent. *See* Exhibit 12. The '691 patent is valid, enforceable, and is currently in full force and effect. A certified copy of the '691 patent is attached as Exhibit 5.

5.28 Pursuant to Rule 210.12(c) of the Commission's Rules of Practice and Procedure, this Complaint is accompanied by Appendices E and L. Appendix E contains four copies of the prosecution history of the '691 patent;[5] Appendix L contains four copies of each reference mentioned in that prosecution history.

2. Non-Technical Description of the Patented Invention

5.29 The '691 patent generally discloses a mounting body for mounting a flow generator assembly inside an external housing. *See* Exhibit 5, '691 Patent, at Abstract. Figures 1 and 2 of the '691 patent depict one embodiment of this mounting body:

[5] At the time of filing of the complaint, a certified copy of the file history of the '691 patent had been ordered. In accordance with Rule 210(a)(9)(i), a certified copy of the '691's file history will be filed with the Commission when received by Complainants.

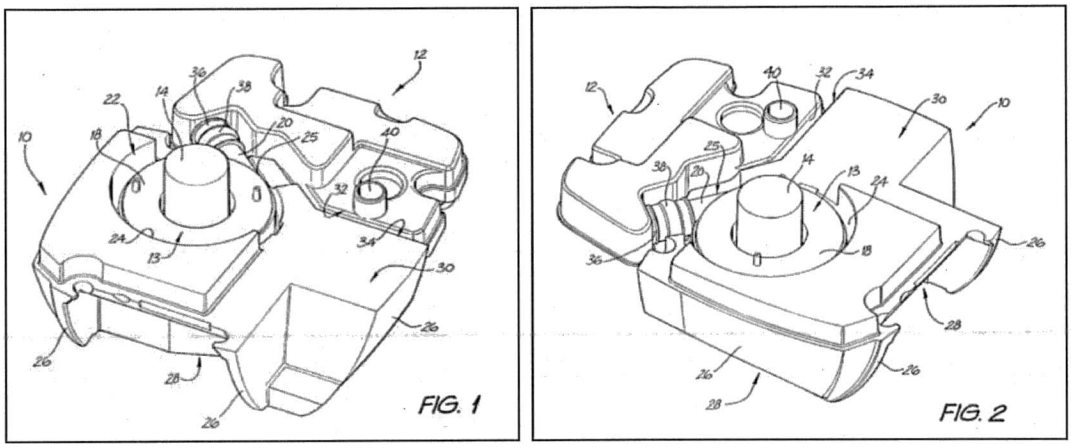

***See id.* at Figs. 1 and 2.**

5.30 The mounting body is made of a compliant material such as polyurethane foam, and is constructed in such a way that it can be attached to an external housing or case. *See id.* at Abstract. As noted previously, a flow generator generally consists of an electric motor driving a fan or turbine. The mounting body of the '691 patent has an indentation or recess of roughly the same size and shape of the flow generator. *See id.* A flow generator can be installed into this recess in the mounting body. *See id.* The flow generator installed in the mounting body can be contained in an external housing, and can be used to provide breathable air to a patient during CPAP treatment. *See id.*

3. Foreign Counterparts to the '691 Patent

5.31 The foreign counterparts to the '691 patent are listed in Exhibit 19. No other foreign patents or patent applications corresponding to the '691 patent have been filed, abandoned, withdrawn or rejected.

E. U.S. Patent Nos. 6,935,337 and 7,614,398

1. Identification of the Patents and Ownership by ResMed

5.32 ResMed Ltd owns by assignment the entire right, title, and interest in the '337 patent entitled "Humidifier With Structure To Prevent Backflow Of Liquid Through The Humidifier Inlet," which issued August 30, 2005. The '337 patent issued from U.S. Patent Application Serial No. 10/467,382, filed on February 14, 2002. ResMed Ltd further owns by assignment the entire right, title, and interest in the '398 patent entitled "Humidifier With Structure To Prevent Backflow Of Liquid Through The Humidifier Inlet," which issued on November 10, 2009. The '398 patent issued from U.S. Patent Application Serial No. 11/181,807, filed on July 15, 2005, and is a continuation of the '337 patent. ResMed Inc. is the exclusive licensee of the '337 and '398 patents and has sublicensed the patents to ResMed Corp., the US sales subsidiary.

5.33 The inventors of both the '337 and '398 patents, Alexander Virr, Ian M. Smith, Perry D. Lithgow, Richard L. Jones, and Andrew Cheung, assigned to ResMed Ltd all rights, title, and interest in the invention ultimately disclosed and claimed in both the '337 and '398 patents. *See* Exhibits 13 and 14. The '337 and '398 patents are valid, enforceable, and are currently in full force and effect. A certified copy of the '337 patent is attached as Exhibit 6, and a certified copy of the '398 patent is attached as Exhibit 7.

5.34 Pursuant to Rule 210.12(c) of the Commission's Rules of Practice and Procedure, this Complaint is accompanied by Appendices F, G, M, and N. Appendix F contains one certified copy and three additional copies of the prosecution history of the '337 patent; Appendix M contains four copies of each reference mentioned in that prosecution history. Appendix G contains one certified copy and three additional copies of the prosecution history of the '398 patent; Appendix N contains four copies of each reference mentioned in that prosecution history.

2. Non-Technical Description of the Patented Invention

5.35 The '337 and '398 patents generally disclose a humidifier for humidifying air in a CPAP system. *See* Exhibit 6, '337 Patent, at Abstract, and Exhibit 7, '398 patent, at Abstract. An embodiment of the invention is pictured in Figures 6 and 7:

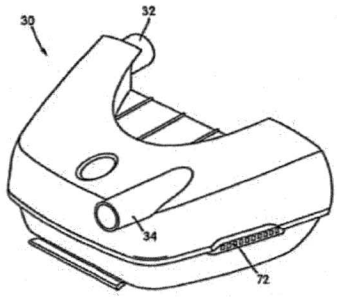

***See id.* at Fig. 6.**

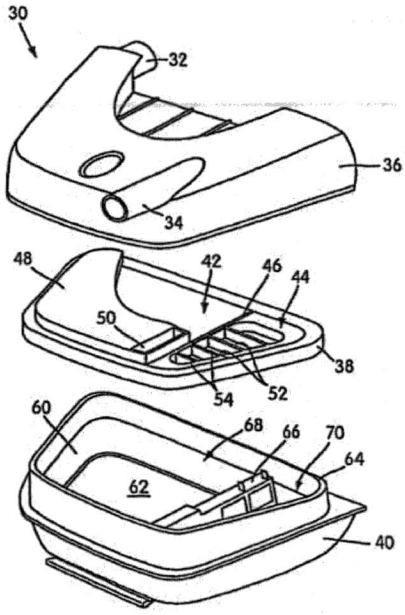

***See id.*at Fig. 7**

5.36 The humidifier of the invention has a top cover attached to a base, with a seal between the two; a part of the base can be made of a heat conducting material. *See* Exhibit 7, '398 Patent, at Abstract. The base has a reservoir chamber within it to store a body of liquid. *See* Exhibit 6, '337 Patent, at Abstract. Air from a blower or flow generator enters the humidifier via an inlet port. *See id.* Air coming in through the inlet port is humidified by the liquid in the reservoir chamber, and subsequently exits the humidifier through an outlet port. *See* Exhibit 7, '398 Patent, at Abstract. Once the humidified air exits through the outlet port, it is delivered to the patient via a conduit. *See* Exhibit 6, '337 Patent, at Abstract. Additionally, the

reservoir chamber of the invention is constructed to prevent liquid in the chamber from back-flowing into the inlet port when the humidifier is rotated from its normal position. *See id.*

3. Foreign Counterparts to the '337 Patent

5.37 The foreign counterparts to the '337 patent are listed in Exhibit 20. No other foreign patents or patent applications corresponding to the '337 patent have been filed, abandoned, withdrawn or rejected.

4. Foreign Counterparts to the '398 Patent

5.38 The foreign counterparts to the '398 patent are listed in Exhibit 21. No other foreign patents or patent applications corresponding to the '398 patent have been filed, abandoned, withdrawn or rejected.

VI. THE DOMESTIC INDUSTRY

6.1 A domestic industry exists as defined by 19 U.S.C. §§ 1337(a)(2)–(3) relating to ResMed's significant investment in plant and equipment; significant employment of labor or capital; and substantial investment in exploitation of the patents, including a variety of technical support, field training and professional clinical education, customer support, and service and repair activities with respect to ResMed's domestic industry sleep-disordered breathing treatment systems and components thereof. While a portion of the manufacturing of ResMed's domestic industry products occurs outside of the United States, ResMed's activities in the United States with respect to these products constitutes a domestic industry for purposes of Section 337. In addition, ResMed's domestic industry products are protected by the one or more claims of each of the Asserted Patents.

A. Technical Prong

6.2 ResMed manufactures, assembles, and sells sleep-disordered breathing treatment systems and components thereof. As set forth in more detail herein, ResMed's sleep-disordered

breathing treatment systems and components thereof incorporate the inventions claimed in one or more of the Asserted Patents.

6.3 The following components of ResMed SDB treatment systems are protected by the '772 patent: Quattro FX, Quattro FX For Her, Mirage Vista, Mirage Quattro, Mirage Micro, Mirage Liberty, and Mirage Activa LT. Photographs of these ResMed products are attached as Exhibits 22-27. Copies of the user manuals for these ResMed Products are attached as Exhibits 29-34. Claim charts demonstrating how representative ResMed products are protected by an exemplary claim of the '772 patent are attached as Exhibits 39, and 41-44.

6.4 The following components of ResMed SDB treatment systems are protected by the '267 patent: Quattro FX, Quattro FX For Her, Mirage Vista, Mirage Quattro, Mirage Micro, Mirage Liberty, and Mirage Activa LT. Photographs of these ResMed products are attached as Exhibits 22-27. Copies of the user manuals for these ResMed Products are attached as Exhibits 29-34. Claim charts demonstrating how representative ResMed products are protected by an exemplary claim of the '267 patent are attached as Exhibits 45, and 47-50.

6.5 The following components of ResMed SDB treatment systems are protected by the '587 patent: Quattro FX, Quattro FX For Her, Mirage Quattro. Photographs of these ResMed products are attached as Exhibits 25 and 27. Copies of the user manuals for these ResMed Products are attached as Exhibits 32 and 34. Claim charts demonstrating how these ResMed products are protected by an exemplary claim of the '587 patent are attached as Exhibit 37-38.

6.6 The following components of ResMed SDB treatment systems are protected by the '767 patent: Mirage Vista, Quattro FX, Quattro FX For Her, Mirage Micro. Photographs of these ResMed products are attached as Exhibits 24, 26, and 27. Copies of the user manuals for

these ResMed Products are attached as Exhibits 31, 33, and 34. A claim chart demonstrating how a representative ResMed product is protected by an exemplary claim of the '767 patent is attached as Exhibit 51.

6.7 The following components of ResMed SDB treatment systems are protected by the '691 patent: the S9 series of devices. Photographs of an S9 device are attached as Exhibit 28.[6] A copy of the user manual for the S9 device is attached as Exhibit 35. A claim chart demonstrating how the S9 device is protected by an exemplary claim of the '691 patent is attached as Exhibit 53.

6.8 The following component of the ResMed SDB treatment systems is protected by the '337 patent: the H5i heated humidifier. Photographs of the H5i heated humidifier are attached as Exhibit 28. A copy of the user manual for the H5i is attached as Exhibit 35. A claim chart demonstrating how the H5i heated humidifier is protected by an exemplary claim of the '337 patent is attached as Exhibit 54.

6.9 The following component of the ResMed SDB treatment systems is protected by the '398 patent: the H5i heated humidifier. Photographs of the H5i heated humidifier are attached as Exhibit 28. A copy of the user manual for the H5i is attached as Exhibit 35. A claim chart demonstrating how the H5i heated humidifier is protected by an exemplary claim of the '398 patent is attached as Exhibit 55.

B. Economic Prong

6.10 ResMed conducts significant domestic industry activities in the United States relating to products protected by one or more claims of the Asserted Patents. These activities include the research and development and manufacturing of electronic motors (the key

[6] The pictures of the S9 and the H5i are shown together in a single exhibit.

component in the ResMed flow generators contained in ResMed's sleep-disordered breathing treatment systems), the packaging of these systems, the education, training and sales of the sleep-disordered breathing systems, and other activities designed to exploit the patents at issue such as customer support, warranty and repair services, and clinical educational activities. ResMed's investment in plant and equipment, employment of labor and capital, and substantial investment in the exploitation of the Asserted Patents and the investments in these activities is set forth in a confidential declaration attached to this complaint. *See* Confidential Exhibit 56. A copy of ResMed Inc.'s Form 10-K and Annual Report for the fiscal year ending June 30, 2010 is attached as Exhibit 79.

6.11 ResMed has made and continues to make significant investment in facilities and equipment in the United States dedicated to the research and development, manufacture, assembly, product support, testing and quality management, and warranty and repair services for products protected by the Asserted Patents. The plant facilities and equipment used in connection with ResMed's products are located in California and South Carolina. ResMed's investment in plant and equipment is set forth in Confidential Exhibit 56.

6.12 ResMed has employed and continues to employ a significant number of employees in the above-mentioned facilities that devote substantial personnel-hours toward the manufacture, assembly, customer and product support, testing and quality management, and warranty and repair services for products protected by the Asserted Patents. Additionally, ResMed employees conduct clinical education sessions to educate clinical professionals on the use of products protected by the Asserted Patents. Confidential Exhibit 56 describes this labor investment.

6.13 ResMed has invested and continues to invest significant capital in its domestic facilities toward customer and product support, testing and quality management, clinical education, and warranty and repair services for products protected by the Asserted Patents. Confidential Exhibit 56 describes the capital ResMed has expended towards these activities.

VII. UNLAWFUL AND UNFAIR ACTS OF PROPOSED RESPONDENTS

7.1 Upon information and belief, Proposed Respondents' accused products directly infringe at least: claims 1, 5, 6, 11, 12, 18, 19, 20, 35 and 36 of the '772 patent; claims 17, 21, 22, 23, 24, 29, 32, 33, 34, 35, 36 and 37 of the '267 patent; claim 15 of the '587 patent; claims 59, 60, 63, 72, 73, 74 and 75 of the '767 patent; claims 1, 2, 4, 5, 17 and 28 of the '691 patent; claims 1 and 20 of the '337 patent; and claims 1, 2, 3, 4, 5, 6 and 7 of the '398 patent. On information and belief, the accused products are manufactured, assembled, packaged, and/or tested overseas, specifically, at least in Taiwan. On information and belief, these same products are then imported into the United States, sold for importation into the United States, and/or sold after importation into the United States by Proposed Respondents. *See* Exhibit 81. Further discovery may reveal that Proposed Respondents infringe additional claims of the Asserted Patents.

A. Apex

7.2 On information and belief, Apex's WiZARD 210 and WiZARD 220 infringe the asserted claims of the '587 patent. Further discovery may reveal additional infringing Apex products and/or models. Photographs of a representative Apex WiZARD 210 and a representative WiZARD 220 are attached to this Complaint as Exhibit 57 and Exhibit 58, respectively. A copy of the user brochure for the representative WiZARD 210 and WiZARD 220 is attached to this Complaint as Exhibit 62. Claim charts demonstrating how the asserted

independent claims of the '587 patent are infringed by the representative accused products are attached as Exhibit 65 and Exhibit 66.

7.3 On information and belief, Apex's WiZARD 210 and WiZARD 220 infringe the asserted claims of the '772 patent. Further discovery may reveal additional infringing Apex products and/or models. Photographs of a representative Apex WiZARD 210 and a representative WiZARD 220 are attached to this Complaint as Exhibit 57 and Exhibit 58, respectively. A copy of the user brochure for the representative WiZARD 210 and WiZARD 220 is attached to this Complaint as Exhibit 62. Claim charts demonstrating how the asserted independent claims of the '772 patent are infringed by the representative accused products are attached as Exhibit 67 and Exhibit 68.

7.4 On information and belief, Apex's WiZARD 210 and WiZARD 220 infringe the asserted claims of the '267 patent. Further discovery may reveal additional infringing Apex products and/or models. Photographs of a representative Apex WiZARD 210 and a representative WiZARD 220 are attached to this Complaint as Exhibit 57 and Exhibit 58, respectively. A copy of the user brochure for the representative WiZARD 210 and WiZARD 220 is attached to this Complaint as Exhibit 62. Claim charts demonstrating how the asserted independent claims of the '267 patent are infringed by the representative accused products are attached as Exhibit 69 and Exhibit 70.

7.5 On information and belief, Apex's WiZARD 210 infringes the asserted claims of the '767 patent. Further discovery may reveal additional infringing Apex products and/or models. A photograph of a representative Apex WiZARD 210 is attached to this Complaint as Exhibit 57. A copy of the user brochure for the representative WiZARD 210 is attached to this

Complaint as Exhibit 62. Claim charts demonstrating how the asserted independent claims of the '767 patent are infringed by the representative accused product are attached as Exhibit 71.

7.6 On information and belief, Apex's XT Fit and iCH Auto infringe the asserted claims of the '691 patent. Further discovery may reveal additional infringing Apex products and/or models. Photographs of a representative Apex XT Fit and a representative iCH Auto are attached to this Complaint as Exhibit 59 and Exhibit 61, respectively.[7] A copy of the user brochure for the representative XT Fit and a copy of the user brochure for the representative iCH Auto are attached to this Complaint as Exhibit 64 and Exhibit 63, respectively. Claim charts demonstrating how the asserted independent claims of the '691 patent are infringed by the representative accused products are attached as Exhibit 72 and Exhibit 73.

7.7 On information and belief, Apex's iCH Auto infringes the asserted claims of the '337 patent. Further discovery may reveal additional infringing Apex products and/or models. Photographs of a representative Apex iCH Auto are attached to this Complaint as Exhibit 61. A copy of the user brochure for the representative iCH Auto is attached to this Complaint as Exhibit 63. A claim chart demonstrating how the asserted independent claims of the '337 patent are infringed by the representative accused product is attached as Exhibit 74.

7.8 On information and belief, Apex's XT Humidifier infringes the asserted claims of the '398 patent. Further discovery may reveal additional infringing Apex products and/or models. Photographs of a representative Apex XT Humidifier are attached to this Complaint as Exhibit 60.[8] A copy of the user brochure for the representative XT Humidifier is attached to this Complaint as Exhibit 64. A claim chart demonstrating how the asserted independent claims of the '398 patent are infringed by the representative accused product is attached as Exhibit 75.

---

[7] Photos of the XT Fit show the unit complimentarily attached to the XT Humidifier.
[8] Photos of the XT Humidifier show the unit complimentarily attached to the XT Fit.

B. Drive

7.9 On information and belief, Drive imports the Apex Wizard 210 and the Apex Wizard 220 and rebrands them as the Freedom 210 and Freedom 220 respectively. For example, attached as Exhibit 83 are photographs of a Drive Freedom 210 in its original packaging that ResMed purchased. As can be seen in the photographs, the Freedom 210 is branded with Drive's brand name:

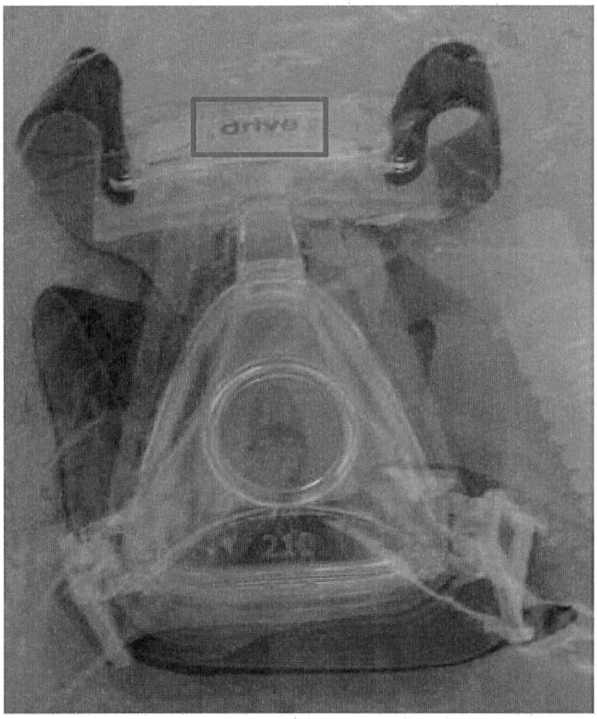

***See* Exhibit 83, Photographs of Drive Freedom 210 (annotated).**

7.10 However, the nasal cushion attached to the mask inside the packaging bears what appears to be a label reading "WiZARD 210":

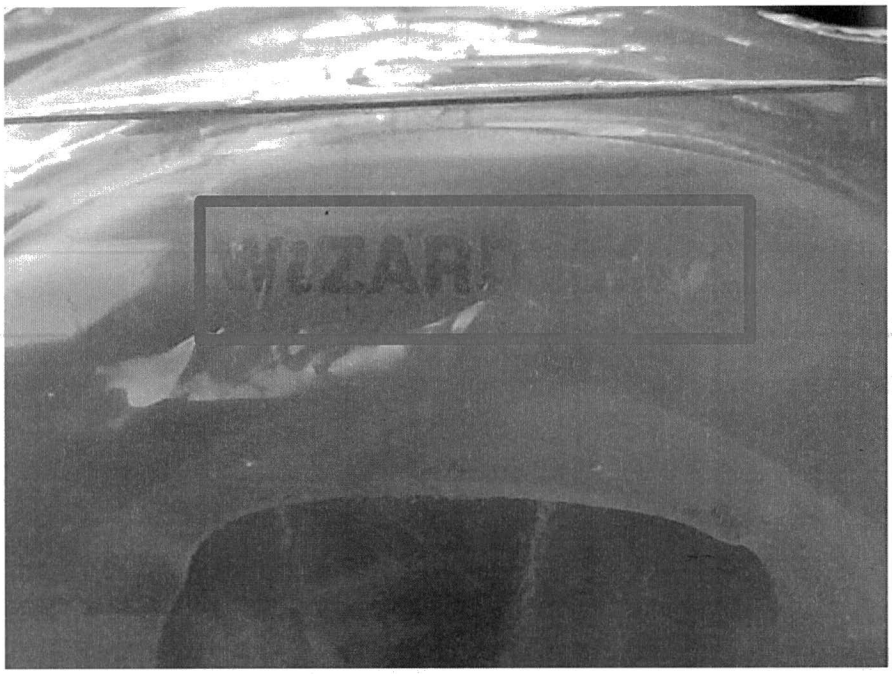

***See id.* (annotated).**

7.11 Additionally, extra replacement nasal cushions provided in the Freedom 210 box also appear to bear a label reading "WiZARD 210":

See id. **(annotated).**

7.12 Therefore, Drive's Freedom 210 infringes the asserted claims of the '267,'587, '767, and '772 patents for the reasons described previously with respect to the Apex Wizard 210, and in the associated claim charts. Drive's Freedom 220 infringes the asserted claims of the '267,'587, and '772 patents for the reasons described previously with respect to the Apex Wizard 220, and in the associated claim charts. Further discovery may reveal additional infringing Drive products and/or models. Photographs of a representative Drive Freedom 210 and a representative Drive Freedom 220 are attached to this Complaint as Exhibit 76 and Exhibit 77, respectively. A copy of the catalog page from Drive showing the Drive Freedom 210 and 220 is attached to this complaint as Exhibit 80.

VIII. SPECIFIC INSTANCES OF UNFAIR IMPORTATION AND SALE

8.1 On information and belief, Proposed Respondents, and/or others on their behalf, manufacture the accused products at least in Taiwan, and then import them into the United States, sell them for importation into the United States and/or sell them after importation into the United States. On information and belief, Apex offers for sale its infringing articles both directly to customers in the United States, and through intermediary suppliers that sell products in the United States, such as Drive.

8.2 A review of import information downloaded from http://www.zepol.com[9] shows that both Apex and Drive have imported sleep-disordered breathing treatment systems and/or components thereof into the United States. *See* Exhibit 81 (demonstrating imports of continuous positive airway pressure systems and/or masks). On information and belief, Apex currently imports and sells only two CPAP mask products in the United States: the accused WiZARD 210 and WiZARD 220. The data from zepol.com indicates shipments of goods described as, for example, "mask, Continuous Positive Airway Pressure" and "cpap Full Face Mask." Therefore, though the import data does not specify the brand names (i.e. WiZARD 210 or 220), the import data in all likelihood includes imports of the Apex WiZARD 210 and 220 because those are believed to be currently the only Apex CPAP masks imported or sold in the United States.

8.3 In addition to the above, ResMed has obtained representative accused products of both Apex and Drive in the United States. Labels on the device and/or product packaging indicate that the accused products were manufactured in Taiwan. Attached as Exhibit 78 are photographs of the product packaging for the Apex WiZARD 210 and WiZARD 220, reflecting

[9] Zepol's "TradeIQ" database provides information about imports and exports based on U.S. Customs: "TradeIQ™ Import data is from the Automated Manifest System (AMS) of U.S. Customs. Shipment details go back to 2003 and are available within 3 to 10 days of shipment arrival." *See* http://www.zepol.com/Products/TradeIQ/TradeIQ.aspx (last accessed March 17, 2013).

that they were made in Taiwan. Attached as Exhibit 82 are photographs of the product packaging for the Drive Freedom 210 reflecting that it was manufactured in Taiwan.

8.4 The accused products are believed to fall within at least the following classifications of the Harmonized Tariff Schedules of the United States: 9019.20.00, and 9817.00.96. This classification is intended for illustrative purposes only and is not intended to restrict the scope or type of accused product.

IX. LICENSEES

9.1 ResMed has licensed one or more of the Asserted Patents. Pursuant to Commission Rule 210.12, ResMed states that for all of the Asserted Patents ResMed Ltd has granted ResMed Inc. an exclusive license with the right to sublicense. ResMed Inc. has granted an exclusive license to all the asserted patents to ResMed Corp. Copies of these licenses can be found in Confidential Exhibit 89. A list of all licensees can be found in Confidential Exhibit 90.

X. RELATED LITIGATION

10.1 On the same day ResMed is filing this Complaint, ResMed is filing suit in the U.S. District Court for the Central District of California, where Apex's offices are located, asserting that Proposed Respondents infringe the patents asserted here: the '587, '772, '767, '267,'691, '337, and '398 patents. There has been no other foreign or domestic court or agency litigation involving any of the Asserted Patents, or the subject matter thereof.

XI. REQUESTED RELIEF

11.1 WHEREFORE, by reason of the foregoing, ResMed requests that the United States International Trade Commission:

(a) Institute an immediate Investigation, pursuant to Section 337 of the Tariff Act of 1930, as amended, 19 U.S.C. § 1337, with respect to violations of Section 337 based on the proposed Respondent's unlawful importation into the United States, sale for

importation into the United States, and/or sale within the United States after importation of certain sleep-disordered breathing treatment systems and components thereof, which infringe one or more claims of United States Patent Nos. 7,159,587; 7,487,772; 7,997,267; 7,743,767 ; 6,216,691; 6,935,337; and 7,614,398;

(b) Schedule and conduct a hearing on the unlawful acts and, following the hearing, determine that there has been a violation of Section 337;

(c) Issue a permanent exclusion order, pursuant to Section 337(d) of the Tariff Act of 1930, as amended, excluding from entry into the United States all of the proposed Respondent's sleep-disordered breathing treatment systems and components thereof which infringe one or more claims of United States Patent Nos. 7,159,587; 7,487,772; 7,997,267; 7,743,767; 6,216,691; 6,935,337; or 7,614,398;

(d) Issue a permanent cease and desist order, pursuant to Section 337(f) of the Tariff Act of 1930, as amended, directing the proposed Respondents to cease and desist from the importation, marketing, advertising, demonstrating, warehousing inventory for distribution, sale and use of certain sleep-disordered breathing treatment systems and components thereof that infringe one or more claims of United States Patent Nos. 7,159,587; 7,487,772; 7,997,267; 7,743,767; 6,216,691; 6,935,337; or 7,614,398; and

(e) Grant such other and further relief as the Commission deems just and proper based on the facts determined by the Investigation and the authority of the Commission.

Respectfully submitted,

FISH & RICHARDSON P.C.

Dated: March 28, 2013

By: Thomas Fusco

Roger Denning
Scott Penner
FISH & RICHARDSON P.C.
12390 El Camino Real
San Diego, CA 92130
Telephone: (858)-678-5070
Fax: (858)-678-5099

Thomas "Monty" Fusco
W. Peter Guarnieri
FISH & RICHARDSON P.C.
1425 K Street, N.W., 11th Floor
Washington, D.C. 20005
Telephone: (202) 783-5070
Facsimile: (202) 783-2331

Frank E. Scherkenbach
FISH & RICHARDSON P.C.
One Marina Park Drive
Boston, MA 02210-1878
Telephone: (617)-542-5070
Fax: (617)-542-8906

Michael J. Kane
FISH & RICHARDSON P.C.
3200 RBC Plaza
60 South Sixth Street
Minneapolis, MN 55402
Telephone: (612)-335-5070
Fax: (612)-288-9696

Counsel for Complainants ResMed Ltd, ResMed Inc., and ResMed Corp.

VERIFICATION OF COMPLAINT

I, Joe Muscatell, declare under the penalty of perjury under the laws of the United States of America, and in accordance with 19 C.F.R. §§ 210.4 and 210.12(a), that the following is true and correct:

1. I am currently the Vice President, Channel Marketing, of ResMed Corp and have been with ResMed Corp for 14 years. I am duly authorized to verify this complaint on behalf of ResMed Corp, ResMed Inc. and ResMed Ltd.
2. I have read the Complaint and I am aware of its contents;
3. The Complaint is not being presented for any improper purpose, such as to harass or to cause unnecessary delay or needlessly increase the cost of litigation;
4. To the best of my knowledge, information and belief founded upon reasonable inquiry, the claims and legal contentions of this complaint are warranted by existing law or a good faith argument for the extension, modification or reversal of existing law;
5. To the best of my knowledge, information and belief founded upon reasonable inquiry, the allegations and other factual contentions in the complaint have evidentiary support or are likely to have evidentiary support after a reasonable opportunity for further investigation or discovery.

Executed on March 27 , 2013

Joe Muscatell