Filed: May 20, 2015

Filed on behalf of:
MASIMO CORPORATION
By: Irfan A. Lateef
Brenton R. Babcock
Jarom D. Kesler
KNOBBE, MARTENS, OLSON & BEAR, LLP
2040 Main Street, 14th Floor
Irvine, CA 92614
Ph.: (949) 760-0404 Fax: (949) 760-9502
E-mail: BoxMasimo@knobbe.com

UNITED STATES PATENT AND TRADEMARK OFFICE

BEFORE THE PATENT TRIAL AND APPEAL BOARD

MASIMO CORPORATION,
Petitioner

v.

MINDRAY DS USA, INC.,
Patent Owner

Case No. TBD
Patent 5,987,343

PETITION FOR *INTER PARTES* REVIEW OF U.S. PATENT 5,987,343

TABLE OF CONTENTS

Page No.

TABLE OF CONTENTS
(*cont'd*)

Page No.

TABLE OF AUTHORITIES

Page No(s).

OTHER AUTHORITIES

TABLE OF AUTHORITIES
(*cont'd*)

Page No(s).

TABLE OF EXHIBITS

Exhibit No.	Description
1001	U.S. Patent No. 5,987,343 ("the '343 Patent")
1002	U.S. Patent No. 4,942,877 ("the Sakai Patent")
1003	Declaration of Jonas Pologe
1004	Curriculum Vitae of Jonas Pologe
1005	Listing of Materials Considered In Preparation of Expert Report of Jonas Pologe
1006	Declaration of Eric Kinast
1007	File Wrapper for U.S. Patent No. 5,987,343
1008	U.S. Pat. No. 5,758,644 ("the Diab Patent")
1009	U.S. Pat. No. 4,770,179 ("the New Patent")
1010	U.S. Pat No. 5,400,267
1011	U.S. Pat. No. 5,425,375
1012	U.S. Pat. No. 5,266,792
1013	U.S. Pat. No. 5,579,482

Under 35 U.S.C. §§ 311–319 and 37 C.F.R. § 42.100 *et seq.*, Petitioner Masimo Corporation ("Masimo") requests *inter partes* review of U.S. Patent No. 5,987,343 ("the '343 Patent"), issued on November 16, 1999, to Kinast and is purportedly owned by Mindray DS USA, Inc. ("Mindray").

I. MANDATORY NOTICES PURSUNT TO 37 C.F.R. § 42.8(A)(1)

Pursuant to 37 C.F.R. § 42.8(a)(1), the mandatory notices identified in 37 C.F.R. § 42.8(b) are provided below as part of this Petition.

A. 37 C.F.R. § 42.8(b)(1): Real Party-In-Interest

Petitioner Masimo Corporation is the real party-in-interest. Masimo Corporation is a publicly traded company on the NASDAQ stock exchange under the symbol MASI.

B. 37 C.F.R. § 42.8(b)(2): Related Matters

Mindray has asserted that Masimo infringes the '343 Patent in a counterclaim in the United States District Court for the District of New Jersey. This Federal Court case is captioned *Masimo Corporation v. Mindray DS USA Inc., Shenzhen Mindray Bio-Medical Electronics Co., LTD and Mindray Medical International LTD.*, No. 2:15-cv-00457-SDW-SCM.

C. 37 C.F.R. § 42.8(b)(3): Lead and Back-up Counsel

Masimo provides the following designation of counsel:

Lead Counsel	Back-up Counsel
Irfan A. Lateef (Reg. No. 51,922) 2ial@knobbe.com Postal and Hand-Delivery Address: Knobbe, Martens, Olson, & Bear, LLP 2040 Main St., 14th Fl. Irvine, CA 92614 Telephone: (949) 760-0404 Facsimile: (949) 760-9502	Brenton R. Babcock (Reg. No. 39,592) 2brb@knobbe.com Jarom D. Kesler (Reg. No. 57,046) 2jzk@knobbe.com Postal and Hand-Delivery Address: Knobbe, Martens, Olson, & Bear, LLP 2040 Main St., 14th Floor Irvine, CA 92614 Telephone: (949) 760-0404 Facsimile: (949) 760-9502

Pursuant to 37 C.F.R. § 42.10(b), a Power of Attorney accompanies this Petition, the above identified Lead and Back-up Counsel are registered practitioners associated with Customer No. 64,735 identified in Masimo's Power of Attorney.

D. Service Information Under 37 C.F.R. § 42.8(b)(4)

Please address all correspondence to Lead and Back-up Counsel at the address shown above. Masimo also consents to electronic service by email to: BoxMasimo@knobbe.com.

II. PAYMENT OF FEES PURSUANT TO 37 C.F.R. § 42.103

The fee set forth in 37 C.F.R. § 41.15(a) for this Petition has been paid. Review of four (4) claims is requested, and thus no excess claim fees are required. The undersigned authorize payment for any additional fees that may be due in connection with this Petition to be changed to Deposit Account No. 11-1410.

III. GROUNDS FOR STANDING PURSUANT TO 37 C.F.R. § 42.104(A)

Masimo certifies that the ’343 Patent is available for *inter partes* review and that Masimo is not barred or estopped from requesting an *inter partes* review challenging the patent claims on the grounds identified in this petition. The present petition is being filed within one year of service of the original complaint against Petitioner.

IV. IDENTIFICATION OF CHALLENGE PURSUANT TO 37 C.F.R. § 42.104(B)

Masimo requests that the Board find Claims 1-4 of the ’343 Patent unpatentable.

A. 37 C.F.R. § 42.104(b)(1): Claim for Which IPR Is Requested

Masimo requests *inter-partes* review of Claims 1-4 of the ’343 Patent.

B. 37 C.F.R. § 42.104(b)(2): The Specific Art and Statutory Ground(s) on Which the Challenge is Based

Masimo requests *inter-partes* review of Claims 1-4 of the ’343 Patent in view of U.S. Patent No. 4,942,877 issued to Sakai (“the Sakai Patent”). The Sakai Patent was filed on September 4, 1987, and issued on July 24, 1990. The ’343 Patent was filed on November 7, 1997. The Sakai Patent is therefore prior art to the ’343 Patent under 35 U.S.C. § 102(b) and is attached hereto as Ex. 1002. Masimo asserts that Claims 1-4 of the ’343 Patent would have been obvious to a person of

ordinary skill in the art at the time of the claimed inventions in view of the Sakai Patent under 35 U.S.C. § 103(a).

C. 37 C.F.R. § 42.104(b)(3): Claim Construction of the Challenged Claims

A detailed explanation of how Claims 1-4 of the ’343 Patent should be construed, including an identification of the specific portions of the specification that describes the structure, material, or acts corresponding to each claimed means-plus-function limitation is provided herein below.

D. 37 C.F.R. § 42.104(b)(4): How the Construed Claim is Unpatentable

A detailed explanation of why Claims 1-4 of the ’343 Patent are unpatentable, including the identification of where each element is found in the prior art, is provided herein below by means of claim charts comparing Claims 1-4 of the ’343 Patent to the prior art.

E. 37 C.F.R. § 42.104(b)(5): Exhibit Numbers and Evidence Supporting Challenge

A Table of Exhibits identifying all exhibits supporting this Petition, and assigning them exhibit numbers, is included herewith. Support for each ground of rejection is included in the Declaration of Jonas Pologe (Ex. 1003). Also included herein is a declaration from the inventor, Eric Kinast (Ex. 1006), stating that because he has now learned of the Sakai Patent, he no longer believes that the ’343 Patent is patentable. The specific relevance of the evidence to the challenge raised,

including identifying specific portions of the evidence that support the challenge, are included herein below.

V. SUMMARY OF ISSUE PRESENTED

The ’343 Patent is directed to pulse oximeters, which measure blood oxygen saturation in a living person. The four challenged claims of the ’343 Patent relate to providing the capability for a pulse oximeter to modify data in an attached probe’s memory. For example, Fig. 2 of the ’343 Patent illustrates the claimed oximeter structure with a microprocessor 28 configured to modify data in the probes’s memory (EEPROM 36):

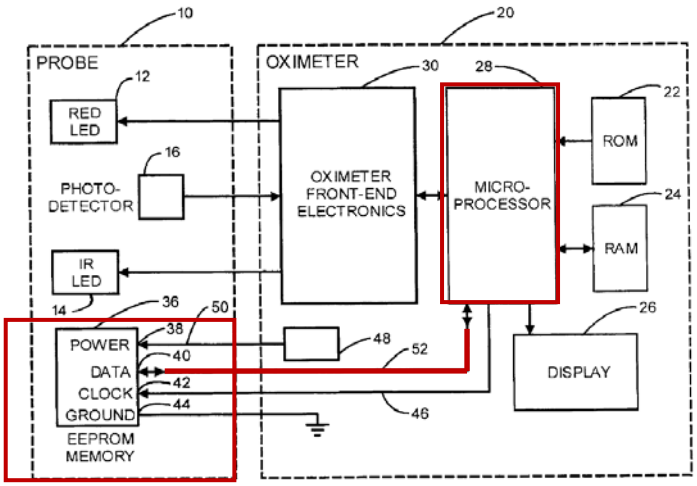

FIG. 2 of ’343 Patent (Ex. 1001)

The prior art relied on herein, the Sakai Patent, discloses a virtually identical pulse oximeter configured to modify data in a probe memory. Ex. 1003 at ¶¶ 52-64. Fig. 1 of the Sakai Patent illustrates a CPU 10 configured to modify a probe memory 56 which is disclosed as being an EEPROM:

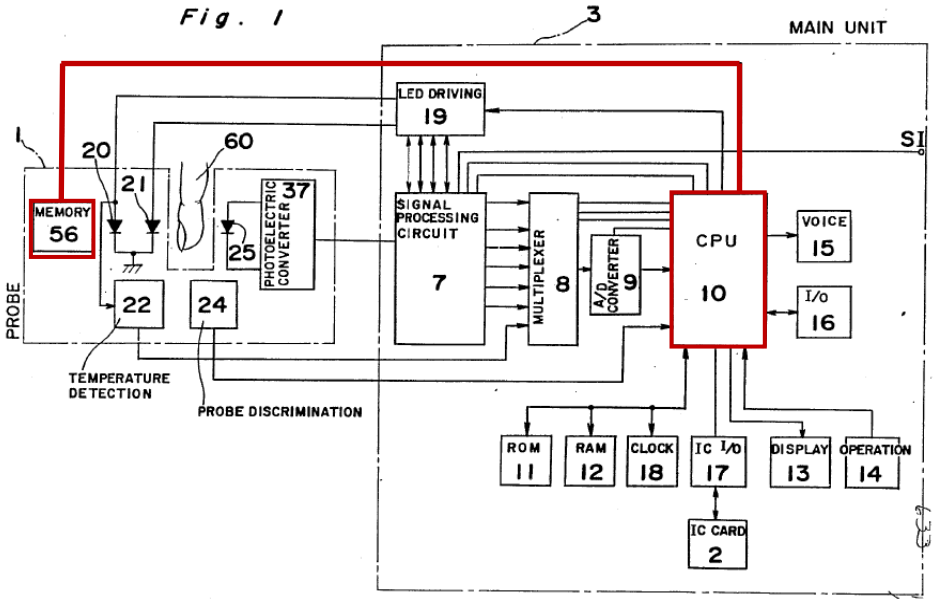

FIG. 1 of the Sakai Patent (Ex. 1002)

The Sakai Patent predates the ’343 Patent’s earliest priority date by about a decade.

Faced with the Sakai Patent’s virtually identical disclosure to that of the ’343 Patent, even the inventor of the ’343 Patent, Eric Kinast, no longer believes the ’343 Patent is patentable. *See* Ex. 1006 (Declaration of Eric Kinast) at ¶¶ 2 & 13.

VI. INTRODUCTION AND BACKGROUND

A. Pulse Oximetry Technology

Pulse oximeters measure blood oxygen saturation in a living person, typically a medical patient. Ex. 1003 at ¶ 28 (Declaration of Jonas Pologe); *see also* Ex. 1001 (the ’343 Patent) at 1:18-21. Blood oxygen saturation is a measurement of the percentage of hemoglobin in the blood stream carrying oxygen

molecules. Ex. 1003 at ¶ 28. Blood oxygen saturation is an industry standard measure used to determine if a patient is sufficiently oxygenated. *Id*.

The science of pulse oximetry is based on the principle that oxygenated blood has a different color and therefore absorbs light differently than non-oxygenated blood. Ex. 1003 at ¶ 29. Pulse oximeters use light sources and a light detector, usually positioned in a probe or sensor attached to the patient's finger, ear, toe or other tissues. *Id*.; *see also* Ex. 1001 at 1:12-17. The light from the light sources shine through the patient's tissue. Ex. 1003 at ¶ 29. A certain amount of the light is attenuated by the patient's tissues and blood (*i.e.*, the intensity of the light is reduced due to absorption, scattering and reflection), and a portion of the light passes through the patient and is detected by the detector. *Id*. The detector generates an electrical signal proportional to the intensity of the light detected. *Id*. By processing this electrical signal from the detector a highly specialized monitor, called a pulse oximeter (or sometimes shortened to oximeter), can then determine the patient's blood oxygen saturation and display that information to the patient care provider. *Id*.; *see also* Ex. 1001 at 1:17-21.

Pulse oximetry systems generally include two main components – an oximeter and a probe. Ex. 1003 at ¶ 30; *see also* Ex. 1001 at 3:33-35. These two components are shown, for example, in Fig. 1 of the '343 Patent which represents

the prior art (the oximeter annotated in a blue box; the probe annotated in a red box):

FIG-1

PRIOR ART

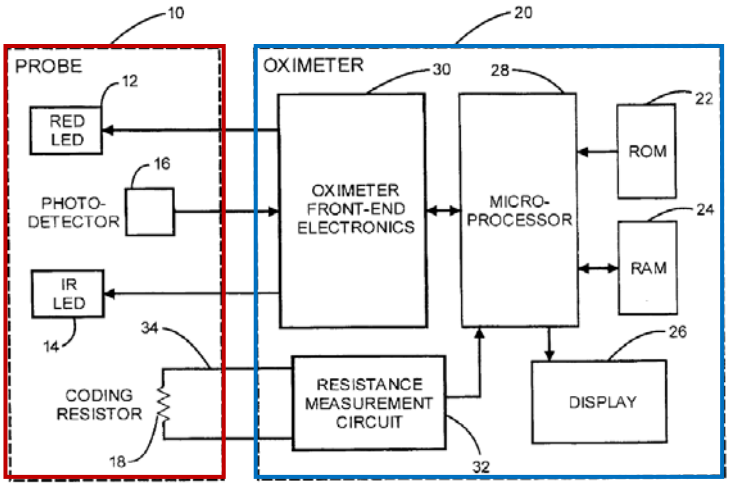

Ex. 1003 at ¶ 30; Ex. 1001 at 3:35-37. The oximeter connects to and communicates with the probe. Ex. 1003 at ¶ 30; Ex. 1001 at 3:41-44. A typical probe, including those available in the 1997 time period, generally included a photodetector, at least two light sources – usually a red LED and an infrared ("IR") LED, and some type of information element. Ex. 1003 at ¶ 30; Ex. 1001 at 3:37-38. The information element can be as simple as a coding resistor as shown in Fig. 1 of the '343 Patent. Ex. 1003 at ¶ 30 (citing Ex. 1001, Fig. 1). A number of other types of information elements on the sensor were known in the art including "transistor networks," "memory chips," "digital value," "binary array" or other

"active," "passive," or "disposable memory." *Id.* (citing Ex. 1008 (U.S. Pat. No. 5,758,644 ("the Diab Patent")) at 18:24-29; Ex. 1009 (U.S. Pat. No. 4,770,179 ("the New Patent")) at 2:26-30). The sensor is placed on the patient and the oximeter drives the light sources in the sensor. Ex. 1003 at ¶ 30; Ex. 1001 at 3:44-45. The detector detects the light transmitted through the finger and transmits a signal indicative of the received light to the oximeter. Ex. 1003 at ¶ 30; Ex. 1001 at 3:41-42. The oximeter receives and processes those signals to determine an oxygen saturation measurement. *Id*.

Pulse oximeters are sensitive instruments and slight variations in the manufacturing tolerances of the light sources and other aspects of the sensor can introduce errors into the ultimate oxygen saturation measurement. Ex. 1003 at ¶ 31; Ex. 1001 at 1:20-39. In order to combat this problem, pulse oximeter sensors have long included an information element. *Id*. (citing Ex. 1008 (the Diab Patent) at 18:16-29 & Ex. 1009 (the New Patent) at 2:16-30). The information element can be used to code the exact specifications of the sensor during manufacture. *Id.* In use, prior art oximeters generally read the information element on the sensor and then adjusted their measurement based on the specific sensor information obtained from the information element. *Id*.

The simplest type of information element used in the pulse oximetry industry is a coding resistor. Ex. 1003 at ¶ 32; *see also* Ex. 1001 at 1:41-65. A

specific resistor value is chosen based on the characteristics of the sensor. Ex. 1003 at ¶ 32. The resistor value is measured by the oximeter using a simple voltage drop measurement. *Id*. The oximeter then uses the information to adjust its measurements with that sensor accordingly. *Id*. Although the ’343 Patent starts its explanation of the prior art with that of the most simple form of information element, as discussed above and as illustrated by the prior art cited by the Patentee and the Examiner, many other types of information elements, including memory chips. *Id*.

B. A Person of Ordinary Skill in the Art of Pulse Oximetry

A person having ordinary skill in the art at the time of the claimed invention is someone who had obtained a Bachelor’s degree in electrical engineering (or the equivalent) and approximately one to two years of professional experience in product development in the field physiological monitoring in the 1997 time frame. Ex. 1003 at ¶ 25.

C. The ’343 Patent Disclosure

The ’343 Patent is very brief, including only four columns of textual disclosure, most of which describe the prior art. Ex. 1003 at ¶ 33; *see* Ex. 1001 at 1:1–4:60. The ’343 Patent limits its discussion of the prior art to the use of coding resistors while failing to discuss other types of known information elements. Ex.

1003 at ¶ 33. For example, Fig. 1 of the ’343 Patent (Ex. 1001) illustrates only coding resistor 18 (the coding resistor annotated in red):

FIG-1

PRIOR ART

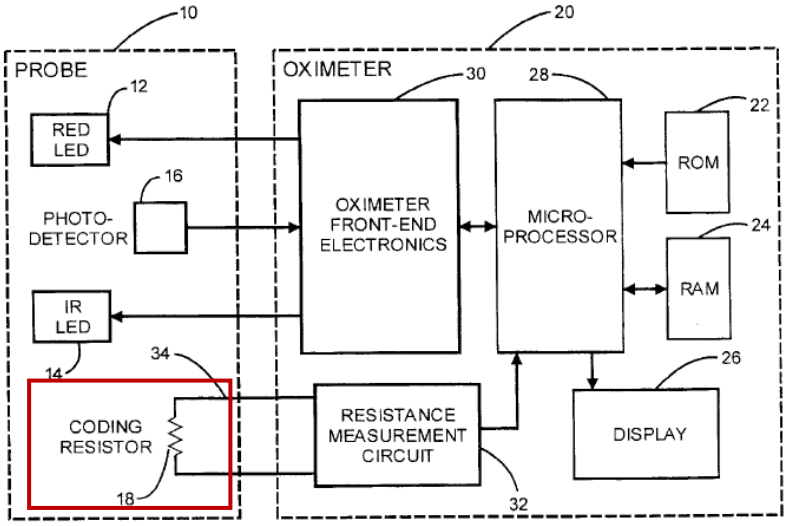

Ex. 1003 at ¶ 33; Ex. 1001 at 3:31-54.

The ’343 Patent states that “[t]he invention is a memory unit capable of storing calibration data attached to a probe portion of a pulse oximeter.” Ex. 1001 at 3:4-5; Ex. 1003 at ¶ 34. The ’343 Patent explains that in its proposed improvement “the coding resistor of the prior art is replaced with an EEPROM memory unit 36.” Ex. 1001 at 3:59-61; Ex. 1003 at ¶ 34. This is shown in Fig. 2 of Ex. 1001, where coding resistor 18 is replaced with EEPROM memory unit 36 (the EEPROM memory unit annotated in red):

FIG-2

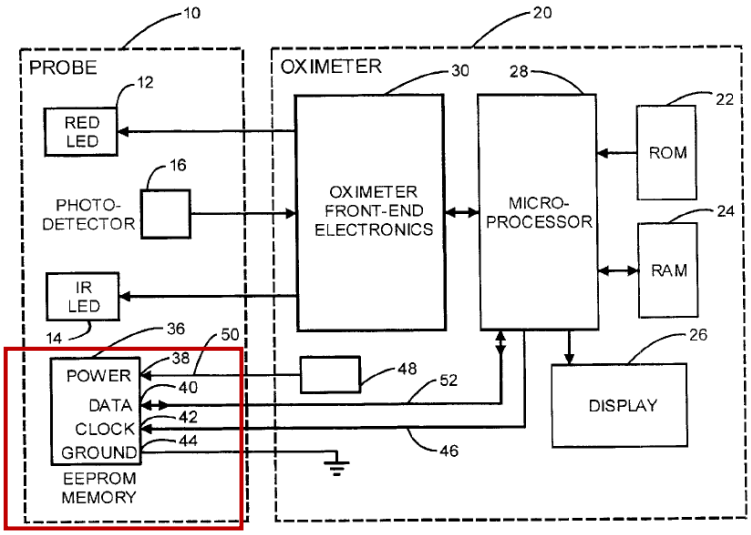

Ex. 1003 at ¶ 34.

The ’343 Patent explains that other than the addition of an EEPROM, the proposed new sensor is identical to the prior art. *Id*. at ¶ 35. “Similar to the prior art, the improved pulse oximeter has two main components: a probe 10 and an oximeter 20. … The probe 10 comprises a red LED 12, an IR LED 14, a photo detector 16, and an EEPROM memory unit 36.” Ex. 1001 at 3:62-4:1; Ex. 1003 at ¶ 35. “The oximeter front-end electronics 30 accepts input signals from the photodetector 16, and the microprocessor 28, and also outputs signals to the microprocessor 28, the red LED 12, and the IR LED 14.” Ex. 1001 at 4:3-7; Ex. 1003 at ¶ 35.

The ’343 Patent then describes the EEPROM memory unit 36. Ex. 1003 at ¶ 36. “The EEPROM memory unit 36 and the microprocessor 28 communicate via an input/output wire 52 which is connected between the data port 40 of the EEPROM memory unit 36 and the microprocessor 28.” Ex. 1001 at 4:14-17; Ex. 1003 at ¶ 36. “During operation, the EEPROM memory unit 36 communicates the wavelength error to the microprocessor 28 which uses it to choose between the correlation tables[1] stored within its memory. The microprocessor could also be programmed to write to the EEPROM memory unit 36 and thereby record cumulative hours of operation, number of patient uses, or other data which is of value in administering the use of sensors with limited life.” Ex. 1001 at 4:23-31.

D. Representative Claim

Independent Claim 1 is representative of the independent claims at issue, and is produced below for convenience:

[1] Correlation tables are typically used by pulse oximeters to account for differences in sensor characteristics. Ex. 1003 at ¶ 36 & n.1.

1. A pulse oximeter comprising:

a probe portion including two or more electromagnetic radiation emitters, each emitting a different wavelength, and a photodetector arranged to detect radiation emitted from the emitters after it has interacted with a subject, and further including a memory unit for storing data related to said emitters or said photodetector or properties of the probe portion[2], and

an oximeter portion including a control unit in communication with said emitters, said photo detector, and said memory unit, said control unit controlling the emitters and calculating the oxygen saturation from signals obtained from the photodetector, and including means for modifying the data in the memory unit.

Ex. 1001 at 4:62 – 5:8.

E. Prosecution History Summary

The ’343 Patent was filed on November 7, 1997. Ex. 1001 at 1. The Examiner rejected the claims as anticipated by U.S. Pat. No. 5,758,644 issued to Diab (“the Diab Patent”), which is assigned to Masimo. Ex. 1007 at 43 (November 6, 1998 OA at 3). The Diab Patent describes a pulse oximeter sensor including “an active circuit such as a transistor network, memory chip, or other identification

[2] The language of “or properties of the probe portion” was added by an Examiner’s amendment in a supplemental notice of allowance during prosecution but was not included in the publication of the ’343 Patent. Ex. 1003 at ¶ 42.

device, for instance Dallas Semiconductor DS 1990 or DS 2401 or other automatic identification chip." Ex. 1003 at ¶ 37 (citing Ex. 1008 (the Diab Patent) at 18:24-29). Although the Examiner noted that the Diab Patent did not explicitly teach an EEPROM device, the Examiner took official notice that an EEPROM device was a well-known type of memory device at the time of the '343 Patent filing. Ex. 1007 at 43-44 (November 6, 1998 OA at 3-4). Masimo's Expert, Mr. Pologe, agrees with this determination. Ex. 1003 at ¶ 37. The Office's official notice regarding an EEPROM device was not contested. Ex. 1007 at 48-54 (January 6, 1999 Response at 1-7); Ex. 1003 at ¶ 37.

In response, the Applicant amended the claims to include the limitation of "bi-directional communication" into all of the independent claims. Ex. 1007 at 49-54 (January 6, 1999 Response at 2-7). The Applicant then argued that the Diab Patent did not teach bi-directional communication. *Id*.; Ex. 1003 at ¶ 38.

In a second Office Action, the Examiner maintained the rejection despite the amendments. Ex. 1007 at 59 (February 9, 1999 Final OA at 2); Ex. 1003 at ¶ 39.The Office Action stated that the bi-directional amendment was set forth as a statement of intended use limitation. In addition, the Examiner indicated that the limitation failed to provide any structural difference with the Diab Patent. *Id*. Thus, the Examiner maintained that the Diab Patent teaches bi-directional communication because it both "stores and communicates information." *Id*.

In response, the Applicant further amended Claims 1 and 3 to include the limitation of a "means for modifying the data in the memory unit." Ex. 1007 at 63 (March 1, 1999 Response at 1). Applicants appears to have added this limitation to more closely align the claims with the Patentee's earlier stated distinction that the oximeter itself writes to the memory as opposed to writing to the memory during a manufacturing step. Ex. 1003 at ¶ 40 (citing Ex. 1007 at 51-53 (January 6, 1999 Response at 4-6)).

In an interview held on June 28, 1999, the "Examiner proposed changes to claims 1 and 9 to more completely set forth the claimed invention." Ex. 1007 at 70 (Examiner interview summary of June 28, 1999); Ex. 1003 at ¶ 41. The Applicant agreed to these changes. *Id*. The Interview Summary was mailed along with a Notice of Allowability which included an Examiner's Amendment making numerous claim amendments on June 30, 1999. Ex. 1007 at 71-74 (Notice of Allowability of June 30, 1999); Ex. 1003 at ¶ 41.

On July 13, 1999, Applicant initiated a second interview. Ex. 1007 at 76 (Examiner Interview Summary of July 13, 1999). In this interview, the Applicant expressed to the Examiner that the Examiner's previous amendment included with the initial Notice of Allowability was incomplete. *Id*. Specifically, the Applicant stated that the phrase "or properties of the probe portion" should have been included in Claim 1 and 3 as agreed to in the previous interview. *Id*. The Examiner

agreed to correct the mistake. *Id*. On July 20, 1999 a Supplemental Notice of Allowability was issued which included the additional limitation of "or properties of the probe portion." *Id*. at 77-79 (Supplemental Notice of Allowability of July 20, 1999).

The '343 Patent issued on November 16, 1999. Issued Claims 1 and 3 did not include the language of "or properties of the probe portion." Ex. 1001 at 1; Ex. 1003 at ¶ 43.

After issuance, on November 17, 2007, the '343 Patent expired for failure to pay maintenance fees. Ex. 1007 at 87 (Notice of Patent Expiration printed December 17, 2007). Applicant did not file a petition to accept the delayed payment of the maintenance fees until April 30, 2008. *Id.* at 88-93 ("Petition to Accept Unintentionally Delayed Payment of Maintenance Fee" received May 7, 2008). The PTO reinstated the '343 Patent on May 28, 2008. *Id*. at 94 (Decision on Petition mailed May 28, 2008).

VII. CLAIM CONSTRUCTION

The claim terms in the '343 Patent are presumed to take on their ordinary and customary meaning based on the broadest reasonable interpretation of the claim language. *See* 37 C.F.R. § 42.100(b); *see also In re Trans Texas Holdings Corp.*, 498 F.3d 1290, 1298 (Fed. Cir. 2007) (stating that "[c]laims are given 'their broadest reasonable interpretation, consistent with the specification, in

reexamination proceedings'") (citing *In re Yamamoto*, 740 F.2d 1569, 1571 (Fed. Cir. 1984)). Masimo does not believe that any special meanings apply to the claim terms, except as explained below. Ex. 1003 at ¶ 49. Accordingly, the claim terms should be given their broadest reasonable interpretation in light of the specification as commonly understood by a person having ordinary skill in the art. *Id*. Masimo's position regarding the scope of the claims should not be taken as an assertion regarding the appropriate claim scope in other adjudicative forums where a different standard of claim construction and/or claim interpretation may apply.

A. Means plus Function Limitations

The independent claims, Claims 1 and 3, include terms presumed to invoke 35 U.S.C. § 112, ¶ 6, because the claim terms use the language "means for" and recite a corresponding function without reciting sufficient structure, material, or acts to perform the recited function. Ex. 1003 at ¶ 50; *see, e.g., Cole v. Kimberly-Clark Corp.,* 102 F.3d 524, 531 (Fed. Cir. 1996). The presumption cannot be rebutted because the limitations in Claims 1 and 3 do not recite sufficient structure or acts to perform the recited functions. *See TriMed, Inc. v. Stryker Corp.,* 514 F.3d 1256, 1259-1260 (Fed. Cir. 2008) (reversed and remanded on other grounds) ("sufficient structure exists when the claim language specifies the exact structure that performs the functions in the question without need to resort to other portions of the specification or extrinsic evidence for an adequate understanding of the

structure."); *see also Altiris, Inc. v. Symantec Corp.*, 318 F.3d 1363, 1376 (Fed. Cir. 2003).

The means-plus-function limitations recited in Claims 1 and 3 are identical and are identified in the table below, along with their corresponding function and structure as described in the specification of the '343 Patent. Ex. 1003 at ¶ 51.

Claims 1 and 3
***means for modifying* the data in the memory unit** **Function:** modifying the data in the memory unit **Structure:** a microprocessor "programmed to write" to the memory unit and its equivalents. Ex. 1001 at 4:26-27; Ex. 1003 at ¶ 51.

For at least the reasons discussed below, a person having ordinary skill in the art would understand that the corresponding structure for the "means for modifying the data in the memory unit" in Claims 1 and 3 is a microprocessor "programmed to write" to the memory unit. Ex. 1003 at ¶ 51 (citing Ex. 1001 at 4:26-27). This is the only disclosure in the '343 Patent which describes modifying the memory unit. *Id.* This is also the only structure identified in the '343 Patent corresponding to the "means for modifying the data in the memory unit" language of the claims. *Id.* In other words, the "means for modifying the data in the memory unit" should be interpreted as programming that is executed in a processor which

instructs the processor to write data to the memory unit. *Id.* Although no algorithm is disclosed, a person of skill in this field would be able to provide an operative software program for "writ[ing] to the memory unit" in the 1997 time frame based on the description of the function included in the '343 Patent. *Id.*

VIII. THERE IS A REASONABLE LIKELIHOOD THAT CLAIMS 1-4 ARE UNPATENTABLE

The Sakai Patent renders obvious the '343 Patent claims, predating the '343 Patent by about a decade. Ex. 1003 at ¶ 52; Ex. 1006 at ¶¶ 7, 11, 13.

A. The Sakai Patent Teaches the Same Hardware Configuration

The Sakai Patent's hardware disclosure as illustrated in Fig. 1 has no meaningful distinction to that of the '343 Patent's hardware disclosure and claims. Ex. 1003 at 53; *see also* Ex. 1006 at ¶ 7 ("I understood that other hardware and software changes would need to be made to the oximeter and sensor. These are explained in the '343 Patent. I believe these changes would have naturally been understood by and were well within the knowledge of a typical engineer working in pulse oximetry.").

The following table provides a comparison of the Sakai Patent's hardware configuration, as shown in its Fig. 1 and as claimed, to that of the '343 Patent's hardware configuration as shown in its Fig. 2. Ex. 1003 at ¶ 61; Ex. 1002 at Fig. 1 & Ex. 1001 at Fig. 2 (the corresponding components annotated in the same color):

The Sakai Patent (Ex. 1002) at Fig. 1	The ’343 Patent (Ex. 1001) at Fig. 2
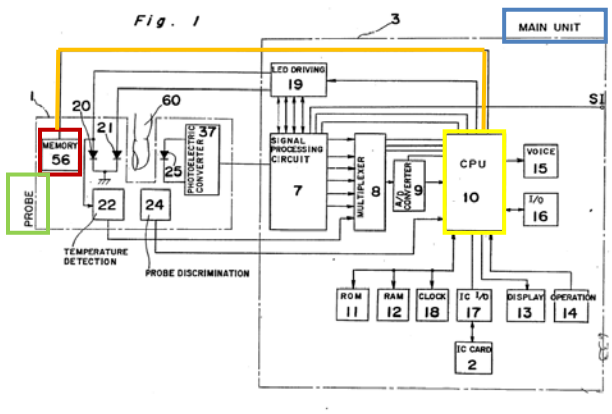	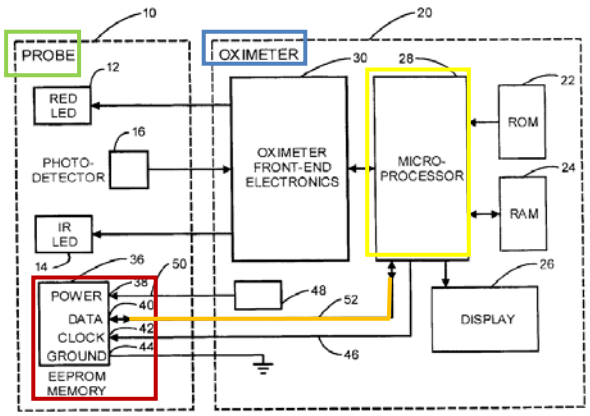

The Sakai Patent discloses a probe 1 and oximeter (main unit 3). Ex. 1002 at Fig. 1 & 3:13-14; Ex. 1003 at ¶ 54. The probe 1 includes a memory circuit 56 which is “an EEPROM or EPROM in which the data can be electrically written and erased.” Ex. 1002 at 3:47-55; Ex. 1003 at ¶ 54. The “memory circuit 56 is connected to CPU 10 via the data bus, both of the devices 10 and 56 may be connected via a single line so as to transfer data serially.” Ex. 1002 at 3:48-51; Ex. 1003 at ¶ 54. The probe also includes red and infrared LED emitters 20, 21 and detector (light receiving element 25). Ex. 1002 at Fig. 1 & 3:15-16, Ex. 1003 at ¶ 54.

Probe 1 of the Sakai Patent corresponds to probe 10 of the ’343 Patent. Ex. 1003 at ¶ 63. Main unit 3 of the Sakai Patent corresponds to oximeter 20 of the ’343 Patent. *Id.* Red LED 20 and Infrared LED 21 of the Sakai Patent correspond

to Red LED 12 and Infrared LED 14 of the ’343 Patent. *Id.* Photodiode 25 and photoelectric converter 37 of the Sakai Patent jointly correspond to photodetector 16 of the ’343 Patent. *Id.* LED driving 19, signal processing circuit 7, multiplexer 8 and A/D converter 9 of the Sakai Patent jointly correspond to oximeter front-end electronics 30 of the ’343 Patent. *Id.* CPU 10 of the Sakai Patent corresponds to microprocessor 28 of the ’343 Patent. *Id.* Memory 56 of the Sakai Patent, which is explicitly described as being an EEPROM, corresponds to EEPROM memory 36 of the ’343 Patent. *Id.* Display 13 of the Sakai Patent corresponds to display 26 of the ’343 Patent. *Id.* ROM 11 and RAM 12 of the Sakai Patent correspond to ROM 22 and RAM 24 of the ’343 Patent and would include the programming necessary to instruct the respective CPU 10 of the Sakai Patent and the microprocessor 28 of the ’343 Patent to write to the respective memory 56 of the Sakai Patent and EEPROM memory 36 of the ’343 Patent. *Id.*

B. The Sakai Patent Teaches A Pulse Oximeter Configured to Modify A Probe’s Memory

Sakai discloses that the CPU 10 of the pulse oximeter monitor 3 ***modifies*** the data in the memory unit. Ex. 1003 at ¶ 55.

> In case the memory circuit 56 in the probe 1 is a rewritable memory such as an EEPROM, the time of turning on RLED 20 and IRLED 21 in the probe 1 may be stored as follows. That is, the data of the time of turning on RLED 20 and IRLED 21 stored in the memory

> circuit 5[6] in the probe 1 may be re-written by CPU 10 in a predetermined period corresponding to the time when RLED 20 and IRLED 21 are turned on.

Ex. 1002 at 12:59-66. This occurs during use. Ex. 1003 at ¶ 55.

The Sakai Patent does not explicitly recite the processor's programming. Ex. 1003 at ¶ 56. It was well understood, however, by a person of skill in the art in the 1997 time frame, that a processor, such as a CPU or microprocessor, must be programmed to operate. *Id*. The Sakai Patent does explicitly recite the functions that are to be performed by the processor, similar to the disclosure of the '343 Patent. *Id*. The Sakai Patent explains that the CPU functions to write data to the memory element 56. Ex. 1002 at 12:59-67; *see* 9:4-12:67 (describing the CPU's operation in detail); Ex. 1003 at ¶ 56. Providing programming for a processor, including programming for writing to memory, was a well-known and well understood technique. Ex. 1003 at ¶ 56. A person of skill in the art would readily know and understand how to write software to perform the operation of modifying a memory device on a probe by a pulse oximeter without undue experimentation. *Id*. at ¶¶ 56-57; *see also Fonar Corp. v. General Elec. Co.*, 107 F.3d 1543, 1549, 41 U.S.P.Q.2d 1801, 1805 (Fed. Cir. 1997) (writing computer programming code for software to perform specific functions is normally within the skill of the art once those functions have been adequately disclosed).

In other words, as explained by the inventor of the ’343 Patent, the “hardware and software changes [that] would need to be made to the oximeter and sensor … would have naturally been understood by and were well within the knowledge of a typical engineer working in pulse oximetry.” Ex. 1006 at ¶ 7.

C. The Sakai Patent Discloses Storing the Same Types of Data On The Rewritable Probe Memory

The Sakai Patent even discloses that the same data content is stored to the probe’s memory as claimed in the ’343 Patent. Ex. 1003 at ¶¶ 58-61. For example, Sakai teaches storing time of use data. Ex. 1003 at ¶ 61 (citing Ex. 1002 (the Sakai Patent) at 12:59-66). This time of use data is data related to the emitters, photodetectors, and properties of the probe portion because it indicates how much time the probe and its components, including the emitters and photodetector, have been in use. Ex. 1003 at ¶ 61.

In addition, the Sakai Patent provides a table in its Fig. 4 (reproduced below) listing eleven different information items. Ex. 1002 at Fig. 4; Ex. 1003 at ¶ 58.

Fig. 4

intensity of main wavelength light of RLED
intensity of light of IRLED
wavelength of main wavelength light of RLED
half power width of main wavelength light of RLED
wavelength of sub-wavelength light of RLED
ratio of luminance of sub to main of RLED
wavelength of IRLED
half power width of IRLED
crosstalk amount from R-ch. to IR-ch.
crosstalk amount from IR-ch. to R-ch.
sum check data

Ex. 1002 at Fig. 4.

The information the Sakai Patent stores includes the intensities of the light produced by each of the emitters (RLED and IRLED), crosstalk amounts which is data related to the photodetector, and a number of other variables, all of which are data related to properties of the probe portion because the emitters and photodetector are on the probe portion. Ex. 1003 at ¶ 58.

With respect to the intensity data stored in the Sakai Patent, this is a direct measure of the performance characteristics of the emitters. *Id.* at ¶ 59. Thus, the intensity measures stored in the probe memory of the Sakai Patent are data related to the emitters. *Id.*

With respect to crosstalk amounts, the Sakai Patent explains that crosstalk results from slow response speeds of the photodetector (light receiving element 25)

and other associated hardware. Ex. 1002 at 7:58-67; Ex. 1003 at ¶ 60. Thus, the stored crosstalk amount is data related to the photodetector. Ex. 1003 at ¶ 60.

D. The Sakai Patent Claims Essentially The Same Subject Matter As The ’343 Patent

The Sakai Patent even claims very similar subject matter as the ’343 Patent claims, as illustrated in Claim 8 of the Sakai Patent. *Id.* at ¶ 64.

> 8. An oximeter device for measuring the saturation degree of oxygen in arterial blood, comprising:
>
> ***a probe*** having light emitting means for emitting light to an organism to be measured, light receiving means for receiving light from the organism, memory means for storing data necessary for a calculation of a saturation degree of oxygen in arterial blood of an examined organism caused by said light emitting means and said light receiving means, ***said memory means including either an EEPROM or EPROM in which data [c]an be rewritten***, and means for counting the emitting time of said light emitting means and estimating the light emitting intensity corresponding to the time of turning on said light emitting means and adjusting a driving current for said light emitting means;
>
> ***a main unit*** having a calculation means which reads out the data stored in said memory means and calculates the saturation degree of oxygen on the basis of the read out data and the output of said light receiving means; and
>
> means for connecting said probe to said main unit.

Ex. 1002 (the Sakai Patent) at Claim 8 (emphasis added).

E. Detailed Claim Charts Illustrate Every Limitation of the ’343 Patent Claims Disclosed or Taught by The Sakai Patent

The Sakai Patent discloses, teaches, or renders obvious every limitation of claims 1-4 of the ’343 Patent. Ex. 1003 at ¶ 65 (¶¶ 52-66); Ex. 1006 at ¶ 12. The following claim chart provides citations to the teachings of the Sakai Patent where every limitation of the ’343 Patent claims are either expressly disclosed, taught, or as would be readily understood by a person of ordinary skill in the art in the 1997 time frame. Ex. 1003 at ¶ 65.

Claim Language of the ’343 Patent (Ex. 1001)	Disclosure in Sakai (Ex. 1002)
1. A pulse oximeter comprising:	• Fig. 1 illustrates a pulse oximeter, Ex. 1003 at p. 34; • Abstract (“an improved oximeter device”); • 2:53-54 (“FIG. 1 is a block diagram showing an embodiment of an oximeter device according to the present invention.”); • 4:25-39 (“CPU 10 calculates the oxygen saturation”).

Claim 1 of the ’343 Patent (Ex. 1001)	Disclosure in Sakai (Ex. 1002)
a probe portion including two or more electromagnetic radiation emitters, each emitting a different wavelength, and	• Fig. 1, item 1 is a probe portion and includes two electromagnetic radiation emitters[3] items 20 and 21 each emitting a different wavelength, Ex. 1003 at p. 34; • 3:13-19 (“In the probe 1, there is provided a pair of a red light emitting diode 20 and an infrared ray emitting diode 21.”).

[3] The ’343 patent’s only support for the limitation of “two or more electromagnetic radiation emitters” are “a red LED 12” and “an IR LED 14.” Ex. 1001 at 3:66-67; Ex. 1003 at p. 34 n.4.

Claim 1 of the ’343 Patent (Ex. 1001)	Disclosure in Sakai (Ex. 1002)
a photodetector arranged to detect radiation emitted from the emitters after it has interacted with a subject, and	• Fig. 1 item 25 is a photodetector that is arranged to detect radiation emitted from the emitters after it has interacted with a subject, Ex. 1003 at p. 35; • 3:34-47 (“A light receiving element 25 made of a photodiode is disposed at a position opposing to said RLED 20 and IRLED 21 so as to receive the light which is radiated from RLED 20 and IRLED 21 and passed through the organism 60”).

Claim 1 of the ’343 Patent (Ex. 1001)	Disclosure in Sakai (Ex. 1002)
further including a memory unit for storing data related to said emitters or said photodetector or properties of the probe portion, and	• Fig. 1, item 56 is a memory unit configured to store data related to said emitters or said photodetector or properties of the probe portion, Ex. 1003 at p. 36; • 3:53-55 (“the memory circuit 56 may be made of an EEPROM or EPROM in which the data can be electrically written and erased”); • 2:61-63 (“Fig. 4 is a diagram showing the data stored in a memory circuit in a probe of the oximeter device in Fig. 1”); • 3:56-4:24 (describing 11 pieces of data stored in the memory circuit including intensity, wavelength, power of emitters which is data related to the emitters, crosstalk amounts which is data related

Claim 1 of the ’343 Patent (Ex. 1001)	Disclosure in Sakai (Ex. 1002)
	to the photodetector and all 11 pieces of information relate to properties of the probe portion), Ex. 1003 at p. 36; • 12:59-67 (“the data of the time of turning on RLED 20 and IRLED 21 stored in the memory circuit 5[6] in the probe 1 may be re-written by CPU 10”).

Claim 1 of the ’343 Patent (Ex. 1001)	Disclosure in Sakai (Ex. 1002)
an oximeter portion	• Fig. 1 item 3 (Main Unit) is an oximeter portion, Ex. 1003 at p. 36; • 3:13-14 (“In Fig. 1, the oximeter device comprises a probe 1 and a main unit 3.”).
including a control unit	• Fig. 1, item 10 (CPU) is a control unit included in the oximeter portion (Main Unit 3), Ex. 1003 at p. 37; • 3:43-44 (“a central processing unit (referred to as CPU) 10 in the main unit 3”); • 4:32-35 (“CPU 10 calculates the oxygen saturation degree SaO2 in arterial blood and the pulse rate of the organism 60 and controls a display unit 13 and an operating unit 14 …”).

Claim 1 of the ’343 Patent (Ex. 1001)	Disclosure in Sakai (Ex. 1002)
in communication with said emitters, said photodetector, and said memory unit,	• Fig. 1 shows the control unit (CPU 10) is in communication with the emitters (20, 21), photodetector (25), and memory unit (56), Ex. 1003 at p. 37; • 3:40-45 (“there are provided a photoelectric converter 37 for converting the output of the light receiving element 25 into a signal of a predetermined level and a non-volatile memory circuit 56 which is connected to a central processing unit (referred to as CPU) 10”); • 5:57-60 (“Each of RLED 20 and IRLED 21 is respectively driven by the LED driving unit 19 which is controlled by the timing pulse generated by an oscillator included in CPU 10”).

Claim 1 of the ’343 Patent (Ex. 1001)	Disclosure in Sakai (Ex. 1002)
said control unit controlling the emitters and calculating the oxygen saturation from signals obtained from the photodetector, and	• Fig. 1, item 10 is a control unit (CPU) which controls the emitters (20, 21) and calculates the oxygen saturation from signals obtained from the photodetector (25), Ex. 1003 at p. 38; • 5:57-60 (“Each of RLED 20 and IRLED 21 is respectively driven by the LED driving unit 19 which is controlled by the timing pulse generated by an oscillator included in CPU 10”); • 4:25-33 (“a signal processing circuit 7 for processing the output of the light receiving element 25 … A multiplexer 8 selects the output of the signal processing circuit 7, an analogue to digital converter 9 … for converting the analogue output signal of the multiplexer 8 into a digital signal. CPU

Claim 1 of the ’343 Patent (Ex. 1001)	Disclosure in Sakai (Ex. 1002)
	10 calculates the oxygen saturation degree”).

Claim 1 of the ’343 Patent (Ex. 1001)	Disclosure in Sakai (Ex. 1002)
including means for modifying the data in the memory unit.	• The structure associated with the “means for modifying the data in the memory unit” in the specification is a microprocessor (also called a CPU) “programed to write to the EEPROM memory unit,” Ex. 1003 at p. 39; • Fig. 1, item 10 (CPU) modifies the data in the memory unit (memory circuit 56), Ex. 1003 at p. 39; • 12:59-66 (“In case the memory circuit 56 in the probe 1 is a rewritable memory such as an EEPROM, the time of turning on RLED 20 and IRLED 21 in the probe 1 may be stored as follows. That is, the data of the time of turning on RLED 20 and IRLED 21 stored in the memory circuit 5[6] in the probe 1

Claim 1 of the ’343 Patent (Ex. 1001)	Disclosure in Sakai (Ex. 1002)
	may be re-written by CPU 10 in a predetermined period corresponding to the time when RLED 20 and IRLED 21 are turned on.”); • Fig. 9 Step #21 (“Increase the counting time of turning on LED” in the probe memory); • 13:15-17(“In the next step 21, the data of the counting time of turning on LED stored in the memory circuit 56 in the probe 1 are increased.”); • 9:4-12:67 (describing the CPU’s process in detail including the CPU writes to the memory); • “A person of ordinary skill would understand that a CPU, such as the one used by the Sakai Patent, must operate

Claim 1 of the ’343 Patent (Ex. 1001)	Disclosure in Sakai (Ex. 1002)
	based on programming. Thus, it would be obvious to a person of skill to generate a program that would cause the CPU to write to the memory device 56 based on the operational characteristics described with respect to the CPU’s operation in the Sakai Patent,” Ex. 1003 at pp. 39-40.

Claim 2 of the ’343 Patent (Ex. 1001)	Disclosure in Sakai (Ex. 1002)
2. The pulse oximeter as claimed in claim 1 wherein the memory unit is an EEPROM.	• Fig. 1, item 56 is a memory unit that can be made of an EEPROM or EPROM. Sakai at 3:53-55, Ex. 1003 at p. 41.

Claim 3 of the ’343 Patent (Ex. 1001)	Disclosure in Sakai (Ex. 1002)
3. A method for modifying data contained in a pulse oximeter,	• Fig. 1, illustrates a pulse oximeter which modifies data stored on the sensor probe, Ex. 1003 at p. 42; • Abstract (“an improved oximeter device”); • 2:53-54 (“FIG. 1 is a block diagram showing an embodiment of an oximeter device according to the present invention.”); • 4:25-39 (“CPU 10 calculates the oxygen saturation”); • 12:59-66 (“In case the memory circuit 56 in the probe 1 is a rewritable memory such as an EEPROM, the time of turning on RLED 20 and IRLED 21 in the probe 1 may be stored as follows. That is, the data of the time of turning

Claim 3 of the ’343 Patent (Ex. 1001)	Disclosure in Sakai (Ex. 1002)
	on RLED 20 and IRLED 21 stored in the memory circuit 5[6] in the probe 1 may be re-written by CPU 10 in a predetermined period corresponding to the time when RLED 20 and IRLED 21 are turned on.”).

Claim 3 of the ’343 Patent (Ex. 1001)	Disclosure in Sakai (Ex. 1002)
said pulse oximeter comprising a probe portion including two or more electromagnetic radiation emitters, each emitting a different wavelength, and	• Fig. 1 item 1 is a probe portion of a pulse oximeter and includes two electromagnetic radiation emitters[4] items 20 and 21 each emitting a different wavelength, Ex. 1003 at p. 43; • 3:13-19 (“In the probe 1, there is provided a pair of a red light emitting diode 20 and an infrared ray emitting diode 21.”).

[4] The ’343 Patent’s only support for the limitation of “two or more electromagnetic radiation emitters” are “a red LED 12” and “an IR LED 14.” Ex. 1001 at 3:66-67; Ex. 1003 at p. 43.

Claim 3 of the ’343 Patent (Ex. 1001)	Disclosure in Sakai (Ex. 1002)
a photodetector arranged to detect radiation emitted from the emitters after it has interacted with a subject, and	• Fig. 1 item 25 is a photodetector that is arranged to detect radiation emitted from the emitters after it has interacted with a subject, Ex. 1003 at p. 43; • 3:34-47 (“A light receiving element 25 made of a photodiode is disposed at a position opposing to said RLED 20 and IRLED 21 so as to receive the light which is radiated from RLED 20 and IRLED 21 and passed through the organism 60”).

Claim 3 of the ’343 Patent (Ex. 1001)	Disclosure in Sakai (Ex. 1002)
further including a memory unit for storing data related to said emitters or said photodetector or properties of the probe portion, and	• Fig. 1, item 56 is a memory unit configured to store data related to said emitters or said photodetector or properties of the probe portion, Ex. 1003 at p. 44; • 3:53-55 (“the memory circuit 56 may be made of an EEPROM or EPROM in which the data can be electrically written and erased”); • Fig. 4, 2:61-63 (“Fig. 4 is a diagram showing the data stored in a memory circuit in a probe of the oximeter device in Fig. 1”); • 3:56-4:24 (describing 11 pieces of data stored in the memory circuit including intensity, wavelength, power of emitters which is data related to the emitters,

Claim 3 of the ’343 Patent (Ex. 1001)	Disclosure in Sakai (Ex. 1002)
	crosstalk amounts which is data related to the photodetector and all 11 pieces of information relate to properties of the probe portion), Ex. 1003 at p. 44; • 12:59-67 (“the data of the time of turning on RLED 20 and IRLED 21 stored in the memory circuit 5[6] in the probe 1 may be re-written by CPU 10”).

Claim 3 of the ’343 Patent (Ex. 1001)	Disclosure in Sakai (Ex. 1002)
an oximeter portion	• Fig. 1 item 3 (Main Unit) is an oximeter portion, Ex. 1003 at p. 44; • 3:13-14 (“In Fig. 1, the oximeter device comprises a probe 1 and a main unit 3.”) Ex. 1003 at p. 44.
including a control unit	• Fig. 1 item 10 (CPU) is a control unit included in the oximeter portion (Main Unit 3), Ex. 1003 at p. 45; • 3:43-45 (“a central processing unit (referred to as CPU) 10 in the main unit 3”); • 4:32-35 (“CPU 10 calculates the oxygen saturation degree SaO2 in arterial blood and the pulse rate of the organism 60 and controls a display unit 13 and an operating unit 14 …”).

Claim 3 of the ’343 Patent (Ex. 1001)	Disclosure in Sakai (Ex. 1002)
in communication with said emitters, said photodetector, and said memory unit,	• Fig. 1 shows the control unit (CPU 10) is in communication with the emitters (20, 21), photodetector (25), and memory unit (56), Ex. 1003 at p. 45; • 3:40-45 (“there are provided a photoelectric converter 37 for converting the output of the light receiving element 25 into a signal of a predetermined level and a non-volatile memory circuit 56 which is connected to a central processing unit (referred to as CPU) 10”); • 5:57-60 (“Each of RLED 20 and IRLED 21 is respectively driven by the LED driving unit 19 which is controlled by the timing pulse generated by an oscillator included in CPU 10”).

Claim 3 of the ’343 Patent (Ex. 1001)	Disclosure in Sakai (Ex. 1002)
said control unit controlling the emitters and calculating the oxygen saturation from signals obtained from the photodetector, and	• Fig. 1, item 10 (CPU) is a control unit that controls the emitters (20, 21) and calculates the oxygen saturation from signals obtained from the photodetector (25), Ex. 1003 at p. 46; • 5:57-60 (“Each of RLED 20 and IRLED 21 is respectively driven by the LED driving unit 19 which is controlled by the timing pulse generated by an oscillator included in CPU 10”); • 4:25-33 (“a signal processing circuit 7 for processing the output of the light receiving element 25 … A multiplexer 8 selects the output of the signal processing circuit 7, an analogue to digital converter 9 … for converting the analogue output signal of the

Claim 3 of the ’343 Patent (Ex. 1001)	Disclosure in Sakai (Ex. 1002)
	multiplexer 8 into a digital signal. CPU 10 calculates the oxygen saturation degree”).

Claim 3 of the ’343 Patent (Ex. 1001)	Disclosure in Sakai (Ex. 1002)
including means for modifying the data in the memory unit,	• The structure associated with the “means for modifying the data in the memory unit” in the specification is a microprocessor (also called a CPU) “programed to write to the EEPROM memory unit,” Ex. 1003 at p. 47; • Fig. 1, item 10 (CPU) modifies the data in the memory unit (memory circuit 56), Ex. 1003 at p. 47; • 12:59-66 (“In case the memory circuit 56 in the probe 1 is a rewritable memory such as an EEPROM, the time of turning on RLED 20 and IRLED 21 in the probe 1 may be stored as follows. That is, the data of the time of turning on RLED 20 and IRLED 21 stored in the memory circuit 5[6] in the probe 1

Claim 3 of the ’343 Patent (Ex. 1001)	Disclosure in Sakai (Ex. 1002)
	may be re-written by CPU 10 in a predetermined period corresponding to the time when RLED 20 and IRLED 21 are turned on.”); • Fig. 9 Step #21 (“Increase the counting time of turning on LED” on the probe memory); • 13:15-17 (“In the next step 21, the data of the counting time of turning on LED stored in the memory circuit 56 in the probe 1 are increased.”); • 9:4-12:67 (describing the CPU’s process in detail including the CPU writes to the memory), Ex. 1003 at p. 47; • “A person of ordinary skill would understand that a CPU, such as the one used by the Sakai Patent, must operate

Claim 3 of the ’343 Patent (Ex. 1001)	Disclosure in Sakai (Ex. 1002)
	based on programming. Thus, it would be obvious to a person of skill to generate a program that would cause the CPU to write to the memory device 56 based on the operational characteristics described with respect to the CPU’s operation in the Sakai Patent.” Ex. 1003 at pp. 47-48.

Claim 3 of the ’343 Patent (Ex. 1001)	Disclosure in Sakai (Ex. 1002)
comprising the steps of:	
outputting one or more signals via the control unit to the memory unit to write data in the memory unit, and	• Fig. 1, item 10 (CPU) outputs one or more signals to the memory unit (memory circuit 56) to write data in the memory unit, Ex. 1003 at p. 49; • 12:59-66 (“In case the memory circuit 56 in the probe 1 is a rewritable memory such as an EEPROM, the time of turning on RLED 20 and IRLED 21 in the probe 1 may be stored as follows. That is, the data of the time of turning on RLED 20 and IRLED 21 stored in the memory circuit 5[6] in the probe 1 may be re-written by CPU 10 in a predetermined period corresponding to the time when RLED 20 and IRLED 21 are turned on.”).

Claim 3 of the ’343 Patent (Ex. 1001)	Disclosure in Sakai (Ex. 1002)
writing the data in the memory unit in response to said one or more signals.	• Fig. 1, item 10 (CPU) outputs one or more signals to the memory unit (memory circuit 56) and data is written in the memory unit in response to the signals, Ex. 1003 at p. 50; • 12:59-66 (“In case the memory circuit 56 in the probe 1 is a rewritable memory such as an EEPROM, the time of turning on RLED 20 and IRLED 21 in the probe 1 may be stored as follows. That is, the data of the time of turning on RLED 20 and IRLED 21 stored in the memory circuit 5[6] in the probe 1 may be re-written by CPU 10 in a predetermined period corresponding to the time when RLED 20 and IRLED 21 are turned on.”);

Claim 3 of the ’343 Patent (Ex. 1001)	Disclosure in Sakai (Ex. 1002)
	• Fig. 9 Step #21 (“Increase the counting time of turning on LED”); • 13:15-17 (“In the next step 21, the data of the counting time of turning on LED stored in the memory circuit 56 in the probe 1 are increased.”).

Claim 4 of the ’343 Patent (Ex. 1001)	Disclosure in Sakai (Ex. 1002)
4. The method for modifying data contained in a pulse oximeter as claimed in claim 3, wherein the memory unit is an EEPROM.	• Fig. 1, item 56 is a memory unit that can be made of an EEPROM or EPROM. Sakai at 3:53-55, Ex. 1003 at p. 51.

IX. SECONDARY CONSIDERATIONS DO NOT OVERCOME THE EVIDENCE OF OBVIOUSNESS

Masimo is unaware of any secondary considerations that would tend to suggest that Claims 1-4 of the ’343 Patent are not obvious under 35 U.S.C. § 103 in view of the prior art. Ex. 1003 at ¶ 66. The presence, if any, of any such secondary considerations does not overcome the compelling prior art that convincingly demonstrates that the subject matter claimed in the ’343 Patent would have been obvious to a person having ordinary skill in the art at the time of the claimed inventions. *Id*.

X. CONCLUSION

For the reasons set forth above, Masimo has established a reasonable likelihood of prevailing in showing that Claims 1-4 of the ’343 Patent are unpatentable, and therefore requests that the Board institute an *Inter Partes Review* trial and cancel those claims. Masimo authorizes the Patent and Trademark Office to charge any required fees to Deposit Account No. 11-1410, including the fee as set forth in 37 C.F.R. § 42.15(a) and any excess claim fees.

Respectfully submitted,

KNOBBE, MARTENS, OLSON & BEAR, LLP

Dated: May 20, 2015

By: /Jarom Kesler/

Irfan A. Lateef (Reg. No. 51,922)
Brenton R. Babcock (Reg. No. 39,592)
Jarom D. Kesler (Reg. No. 57,046)
Attorneys for Petitioner
MASIMO CORPORATION
Customer No. 64,735
(949) 760-0404

CERTIFICATE OF SERVICE

I hereby certify that true and correct copies of the foregoing **PETITION FOR INTER PARTES REVIEW OF U.S. PATENT 5,987,343** and **Masimo's Exhibits 1001-1013** are being served on May 20, 2015, via FedEx Priority Overnight on counsel of record for U.S. Pat. 5,987,343 at the address below:

Correspondence Address of Record for U.S. Pat. 5,987,343 at the U.S. Patent and Trademark Office:

Stoel Rives LLP
ATTN: Kory D. Christensen
201 S. Main Street
Suite 1100
Salt Lake City UT, 84111
Ph: 801-328-3131

Dated: May 20, 2015 By: /Jarom Kesler/

Irfan A. Lateef (Reg. No. 51,922)
Brenton R. Babcock (Reg. No. 39,592)
Jarom D. Kesler (Reg. No. 57,046)
Attorneys for Petitioner
MASIMO CORPORATION

20122374