UNITED STATES PATENT AND TRADEMARK OFFICE

BEFORE THE PATENT TRIAL AND APPEAL BOARD

VARIAN MEDICAL SYSTEMS, INC.
Petitioner

v.

WILLIAM BEAUMONT HOSPITAL
Patent Owner

U.S. Patent No. 6,842,502
Filing Date: February 16, 2001
Issue Date: January 11, 2005

Title: CONE BEAM COMPUTED TOMOGRAPHY WITH A FLAT PANEL IMAGER

PETITION FOR *INTER PARTES* REVIEW OF U.S. PATENT NO. 6,842,502

Inter Partes Review No. 2015-___

Table of Contents

Page

Table of Contents
(continued)

Page

Page

List of Exhibits

Ex. No.	Description of Document
1301	U.S. Patent No. 6,842,502 issued to David A. Jaffray, *et al.* ("'502 patent")
1302	Declaration of Dr. James Balter ("Balter Decl.")
1303	U.S. Patent No. 5,207,223 issued to Adler *et al.* ("Adler")
1304	U.S. Patent No. 5,427,097 issued to Depp ("Depp")
1305	P.S. Cho *et al.*, *Cone-beam CT for radiotherapy applications*, Phys. Med. Biol., 40:1863-83 (1995) ("Cho")
1306	L.E. Antonuk *et al.*, *Thin-Film, Flat-Panel, Composite Imagers for Projection and Tomographic Imaging*, IEEE Transactions on Medical Imaging, 13:482-90 (1994) ("Antonuk")
1307	D.A. Jaffray *et al.*, *Exploring "Target Of The Day" Strategies for A Medical Linear Accelerator With Conebeam-CT Scanning Capability*, Proceedings of the 12th International Conference on the Use of Computers in Radiation Therapy, Medical Physics Publishing, pp. 172-75 (1997) ("Jaffray 1997")
1308	D. Yan *et al.*, *The Use of Adaptive Radiation Therapy to Reduce Setup Error: A Prospective Clinical Study*, Int'l J. Radiation Oncology Biol. Phys., 41:715-20 (1998) ("Yan")
1309	Apr. 20, 2004 Office Action
1310	Jan. 23, 2004 Applicant's Remarks
1311	Provisional Application No. 60/183,590 filed by David A. Jaffray *et al.* ("'590 Provisional")
1312	Exhibit Not Used
1313	P. Munro, *Portal Imaging Technology: Past, Present, and Future*, Seminars in Radiation Oncology, 5:115-33 (Apr. 1995) ("Munro 1995")

List of Exhibits

Ex. No.	Description of Document
1314	Feb. 16, 2001 Application
1315	P.J. Biggs *et al.*, *A Diagnostic X Ray Field Verification Device For A 10 MV Linear Accelerator*, Int'l J. Radiation Oncology Biol.-Phys., 11:635-43 (1985) ("Biggs 1985")
1316	A. Ezz *et al.*, *Daily Monitoring and Correction of Radiation Field Placement Using a Video-Based Portal Imaging System: A Pilot Study*, Int'l J. Radiation Oncology Biol. Phys., 22:159-65 (1991) ("Ezz 1991")
1317	W. De Neve *et al.*, *Routine clinical on-line portal imaging followed by immediate field adjustment using a tele-controlled patient couch*, Radiotherapy & Oncology, 24:45-54 (1992) ("De Neve 1992")
1318	T.R. Mackie *et al.*, *Tomotherapy: A New Concept for the Delivery of Dynamic Conformal Radiotherapy*, Med. Phys., 20:1709-19 (Nov./Dec. 1993) ("Mackie")
1319	R. Sephton *et al.*, *A diagnostic-quality electronic portal imaging system*, Radiotherapy & Oncology, 35:204-47 (1995) ("Sephton 1995")
1320	M.C. Kirby *et al.*, *Clinical Applications of Composite and Realtime Megavoltage Imaging*, Clinical Oncology, 7:308-16 (1995) ("Kirby 1995")
1321	J.M. Michalski *et al.*, *Prospective Clinical Evaluation of an Electronic Portal Imaging Device*, Int'l J. Radiation Oncology Biol. Phys., 34:943-51 (1996) ("Michalski 1996")
1322	D. Yan *et al.*, *Adaptive radiation therapy*, Phys. Med. Biol., 42:123-32 (1997) ("Yan 1997")
1323	M.A. Mosleh-Shirazi *et al.*, *A cone-beam megavoltage CT scanner for treatment verification in conformal radiotherapy*, Radiotherapy & Oncology, 48:319-28 (1998) ("Mosleh-Shirazi 1998")

List of Exhibits

Ex. No.	Description of Document
1324	S. Webb *et al.*, *Tomographic Reconstruction from Experimentally Obtained Cone-Beam Projections*, IEEE Transactions on Medical Imaging, MI-6:67-73 (Mar. 1987) ("Webb 1987")
1325	D.A. Jaffray *et al.*, *Dual-Beam Imaging for Online Verification of Radiotherapy Field Placement*, Int'l J. Radiation Oncology Biol. Phys., 33:1273-80 (1995) ("Jaffray 1995")
1326	S.M. Midgley *et al.*, *A Feasibility Study For The Use Of Megavoltage Photons And A Commercial Electronic Portal Imaging Area Detector For Beam Geometry CT Scanning To Obtain 3D Tomographic Data Sets Of Radiotherapy Patients In The Treatment Position*, Proceedings of the 4th Int'l Workshop of Electronic Portal Imaging, Amsterdam, 1996, Abstract No. 60 (2 pages) (1996) ("Midgley 1996")
1327	J. Wong *et al.*, *Initial clinical experience with a gantry mounted dual beam imaging system for setup error localization*, Int'l J. Radiation Oncology Biol. Phys., 42(Suppl. 1):138 (Abstract 28) (1998) ("Wong 1998")
1328	L.E. Antonuk *et al.*, *Demonstration of megavoltage and diagnostic x-ray imaging with hydrogenated amorphous silicon arrays*, Med. Phys., 19:1455-66 (Nov./Dec. 1992) ("Antonuk 1992")
1329	L.E. Antonuk *et al.*, *A Real-Time, Flat-Panel, Amorphous Silicon, Digital X-ray Imager*, RadioGraphics, 15:993-1000 (1995) ("Antonuk 1995")
1330	J. Chabbal *et al.*, *Amorphous Silicon X-ray Image Sensor*, Proceedings of SPIE (Society of Photographic Instrumentation Engineers), 2708:499-510 (1996) ("Chabbal 1996")
1331	R. Ning *et al.*, *Selenium Flat Panel Detector-Based Volume Tomographic Angiography Imaging: Phantom Studies*, Proceedings of SPIE (Society of Photographic Instrumentation Engineers), 3336:316-24 (Feb. 1998) ("Ning 1998")

List of Exhibits

Ex. No.	**Description of Document**
1332	R. Ning *et al.*, *Flat panel detector-based cone beam volume CT imaging: detector evaluation*, Proceedings of SPIE (Society of Photographic Instrumentation Engineers), 3659:192-203 (Feb. 1999) ("Ning 1999")
1333	U.S. Patent No. 6,041,097 issued to Roos *et al.* ("Roos 1998")
1334	J.H. Siewerdsen *et al.*, *Signal, noise power spectrum, and detective quantum efficiency of indirect-detection flat-panel imagers for diagnostic radiology*, Med. Phys., 25:614-28 (May 1998) ("Siewerdsen 1998")
1335	A.T. Redpath *et al.*, *Chapter 6: Simulator Computed Tomography*, pp. 169-89, in *The Modern Technology of Radiation Oncology*, J. Van Dyk (ed.) (1999) ("Redpath 1999")

Petitioner Varian Medical Systems, Inc. ("Petitioner") respectfully submits this Petition for *Inter Partes* Review of claims 43-46, 48-55, 57, 59, 60-66, and 68 of U.S. Patent No. 6,842,502 **[Ex. 1301]** ("the '502 patent").

I. MANDATORY NOTICES UNDER 37 C.F.R. § 42.8(a)(1)

A. Real Party-ln-lnterest Under 37 C.F.R. § 42.8(b)(1)

In addition to petitioner Varian Medical Systems, Inc., VMS International AG and its two Dutch parent companies, VMS Nederland Holdings BV and VMS Nederland BV, are real parties-in-interest.

B. Related Matters Under 37 C.F.R. § 42.8(b)(2)

The '502 patent is the subject of one pending litigation involving the Petitioner: *Elekta Ltd. v. Varian Medical Systems, Inc.*, Case No. 2:15-cv-12169-AC-MKM (E.D. Mich. June 15, 2015), in which the patent owner contends that the Petitioner infringes the '502 patent. The Petitioner was served with a complaint in that action on September 3, 2015.

Petitioner is concurrently filing an additional petition for *inter partes* review of claims 43-46, 48-55, 57, 59, 60-66, and 68, based on unique legal grounds and prior art. Petitioner is also seeking *inter partes* review of apparatus claims 1-14, 16-29, 33, and 35-38 of the '502 patent through two additional concurrently filed petitions.

C. Lead and Back-Up Counsel Under 37 C.F.R. § 42.8(b)(3)

LEAD COUNSEL	**BACK-UP COUNSEL**
Heidi L. Keefe (Reg. No. 40,673) hkeefe@cooley.com zpatdcdocketing@cooley.com COOLEY LLP ATTN: Patent Group 1299 Pennsylvania Ave., NW, Suite 700 Washington, DC 20004 Tel: (650) 843-5001 Fax: (650) 849-7400	Daniel J. Knauss (Reg. No. 56,393) dknauss@cooley.com zpatdcdocketing@cooley.com COOLEY LLP ATTN: Patent Group 1299 Pennsylvania Ave., NW, Suite 700 Washington, DC 20004 Tel: (650) 843-5287 Fax: (650) 849-7400

D. Service Information

The Petitioner may be served at the address provided above in Part I.C for lead and back-up counsel, and consents to electronic service at those addresses.

E. Power of Attorney

Filed concurrently in accordance with 37 C.F.R. § 42.10(b).

II. PAYMENT OF FEES - 37 C.F.R. § 42.103

This Petition requests review of 22 claims of the ’502 patent, therefore excess claim fees are required. A payment of $26,200 is submitted herewith, which comprises a $9,400 request fee and a post-institution fee of $16,800. *See* 37 C.F.R. § 42.15(a). This Petition meets the requirements of 35 U.S.C. § 312(a)(1).

III. REQUIREMENTS FOR *INTER PARTES* REVIEW UNDER 37 C.F.R. §§ 42.104 AND 42.108

A. Grounds for Standing under 37 C.F.R. § 42.104(a)

The Petitioner certifies that the ’502 patent is available for *inter partes* review, and that the Petitioner is not barred or otherwise estopped from requesting *inter partes* review on the grounds identified in the present Petition. The Petitioner is unaware of any previous petition for *inter partes* review with respect to the ’502 patent.

B. Identification of Challenge Under 37 C.F.R. § 42.104(b) and Statement of Precise Relief Requested

The Petitioner respectfully requests that the Board initiate *inter partes* review of claims 43-46, 48-55, 57, 59, 60-66, and 68. This Petition cites the following prior art references, submitted as Exhibits **1303** through **1308**:

Ex. No.	Description of Document
1303	U.S. Patent No. 5,207,223 issued to Adler *et al.* (“Adler”)
1304	U.S. Patent No. 5,427,097 issued to Depp (“Depp”)
1305	P.S. Cho *et al.*, *Cone-beam CT for radiotherapy applications*, Phys. Med. Biol., 40:1863-83 (1995) (“Cho”)
1306	L.E. Antonuk *et al.*, *Thin-Film, Flat-Panel, Composite Imagers for* Projection *and Tomographic Imaging*, IEEE Transactions on Medical Imaging, 13:482-90 (1994) (“Antonuk”)
1307	D.A. Jaffray *et al.*, *Exploring “Target Of The Day” Strategies for A Medical Linear Accelerator With Conebeam-CT Scanning Capability*, Proceedings of the 12th International Conference on the Use of Computers in Radiation Therapy, Medical Physics Publishing, pp. 172-75 (1997) (“Jaffray 1997”)
1308	D. Yan *et al.*, *The Use of Adaptive Radiation Therapy to Reduce Setup Error: A* Prospective *Clinical Study*, Int’l J. Radiation Oncology Biol. Phys., 41:715-20 (1998) (“Yan”)

The grounds on which this Petition is based are listed in the table below.

Ground	Claims	Basis for Challenge
1	43-46, 48-55, 57 & 59	Obvious over Cho, Antonuk, Jaffray 1997, and Adler/Depp (§ 103(a))
2	60-66 & 68	Obvious over Cho, Antonuk, Jaffray 1997, Adler/Depp, and Yan (§ 103(a))

Sections VII-D and VIII-C below provide a detailed explanation as to why the challenged claims are unpatentable based on these grounds.

This Petition also submits the accompanying Declaration of Dr. James Balter, an expert with over 20 years of experience in the fields of radiation oncology and medical physics. (*See* Balter Decl., **[Ex. 1302]**, ¶¶ 2-5.) Dr. Balter's declaration includes additional exhibits (Exs. 1313 - 1335), relied on by Dr. Balter as providing further information regarding the relevant technology and the state of the art at the relevant time.

C. Requirements for *Inter Partes* Review 37 C.F.R. § 42.108(c)

The Board should institute *inter partes* review of claims 43-46, 48-55, 57, 59, 60-66, and 68 because this Petition establishes a reasonable likelihood of prevailing with respect to each challenged claim. *See* 35 U.S.C. § 314(a). Each limitation of each challenged claim is disclosed and/or suggested by the prior art, as explained in detail below.

IV. BRIEF BACKGROUND OF THE UNDERLYING TECHNOLOGY

A. Radiotherapy and Image Guidance

Radiation therapy or "radiotherapy" is the use of beams of radiation for the treatment of disease. Radiation therapy of internal patient lesions, such as cancerous tumors, is very old – dating back over 100 years. For decades, practitioners have known that the effectiveness of radiation therapy is increased when imaging is used to ensure that the radiation therapy beam is applied as narrowly as possible to a tumor while minimizing exposure to surrounding healthy tissues. (*See* Ex. 1302, ¶ 14.) Indeed, the first known instance of using x-ray imaging to improve the accuracy of radiation therapy dates back to the 1940s. (*Id.*, ¶¶ 15-16.) The corollary concept that imaging should be done close in time to when the radiation is delivered is likewise very old. As explained by Dr. Balter, the field of radiation therapy has consistently maintained its focus on combining imaging with radiation therapy, and the '502 patent did nothing to shift the direction of the field. (*Id.*, ¶¶ 14-17.)

B. 3-D Computed Tomography with Flat Panel Imagers

The field of 3-D computed tomography ("CT") imaging using x-rays was fully developed well in advance of the earliest possible priority date listed on the face of the '502 patent. By this time it was already well known that high quality 3-D images of patient internal structures could be obtained using x-ray technology and computer imaging systems. (Ex. 1302, ¶¶ 18-20.) In brief, these prior art systems used an x-ray source and imager to collect a multitude of x-ray projection images at different angles around the patient. Initially, these CT systems worked through a "stack-of-slices" approach in which several 2-D images were stacked on top of each other to form a 3-D image. The underlying 2-D CT images were obtained one at a time by rotating an x-ray source emitting a "fan" shaped beam around a patient and then progressively translating the patient through the scanner. By the mid-1990s, however, systems were available that obtained 3-D images in a single rotation using a technology called "cone-beam" CT ("CBCT"). As the name suggests, CBCT works by using a large x-ray field shaped in a cone rather than a thin "fan-beam." The figure below contrasts the fan-beam and cone-beam approaches to CT that were well established by 1999:

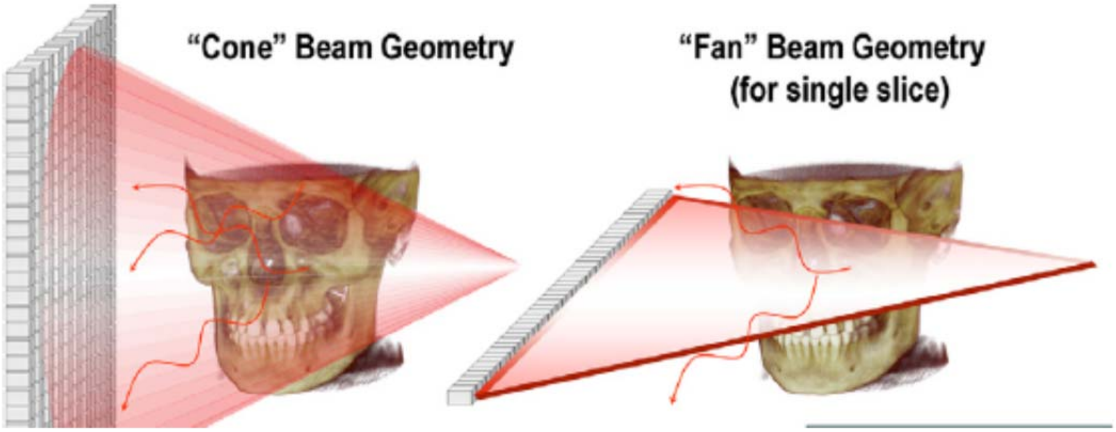

Central to the utility of this cone-beam approach were detectors that could receive x-ray cone-beam projection data. By the mid 1990s, the field of large flat-panel detector arrays had developed to meet this need. The art was unequivocal that such flat panel imagers were an obvious choice for large field x-ray imaging, stating in 1994 that "[t]he recent development of large-area, flat-panel a-Si:H imaging arrays is generally expected to lead to realtime diagnostic and megavoltage x-ray projection imagers …." (*See* Ex. 1302, ¶ 42.) Thus before the '502 applicants began their work, it was already known that CBCT imaging could be improved by the use of a large flat panel image detector to facilitate rapid acquisition of 3-D CT image data obtained from a single rotation of the imaging system around the patient.

C. The '502 Patent Did Not Advance the Art

The '502 patent generally relates to a cone-beam computed tomography ("CBCT") imaging system that employs x-rays detected by a flat-panel imager ("FPI") on a radiotherapy system. In the systems described by the '502 patent, the patient is imaged while in position for treatment with a beam of radiation. ('502, 1:12-18.) As described by the applicants, CBCT (as opposed to other forms of medical imaging such as traditional x-ray or magnetic resonance) is used to obtain three-dimensional patient information which can be used to better guide therapeutic radiation to a target lesion such as a tumor. (*Id.*, 1:20-22; 3:40-4:2.)

The systems claimed in the '502 patent were nothing more than the combination of known elements, with each element performing its well-known function. The applicants' assembly of old elements provided results just as would be expected by one of skill in the art. As described fully herein, it was known in the field of radiotherapy to use diagnostic (kV) x-rays on a radiotherapy gantry to obtain images for real-time control of a radiation source. It was also known to use kV x-rays for cone beam imaging on a linear accelerator gantry because of its superior image quality. A combined CBCT/FPI system was also known, and indeed it was known to use the exact type of flat panel imager used in this prior art CBCT system on a radiotherapy system. Because of the known benefits of CBCT, the known benefits of image-guided radiotherapy, and the express teaching in the prior art to use the same flat panel imager of the prior art CBCT system on a radiotherapy gantry, it was obvious to apply the prior art CBCT/FPI system to control the prior art radiotherapy system because of the known benefits of improved imaging. (*See also* Ex. 1302, ¶¶ 21-22.)

In fact, the '502 patent does not claim any inventive elements in assembling these old components. The claims merely recite systems employing a CBCT-FPI in combination with a radiotherapy device, but the '502 applicants did not invent the use of CBCT with an FPI to obtain 3-D images of a patient. Nor did they invent the use of x-ray images as a means for guiding a radiation source. Instead, the applicants claimed the concept of performing image guided radiotherapy "based on one rotation" of the x-ray source around the object, and seek to exclude others from using it. This concept has also long been known in the field of computed tomography and radiation oncology. The ’502 patent does nothing more than assemble known components to achieve an expected result. Thus the assembly (and the claimed methods of using it) were obvious, and the claims of the ’502 patent should not have been issued.

V. SUMMARY OF THE ’502 PATENT

A. The Specification and File History of the ’502 Patent

The ’502 patent is entitled “Cone Beam Computed Tomography with a Flat Panel Imager.” It describes a radiotherapy system with a cone-beam x-ray source coupled to an FPI for providing 3-D images of a patient, all under computer control, and methods of using the same for patient radiotherapy. The specification describes embodiments of this basic system employing aspects such as a motorized table for movement of the patient, the use of kV x-rays, and the use of amorphous silicon imagers as an FPI. The specification also describes a benefit of CBCT in the ability to obtain 3-D images from a single rotation of the x-ray gantry around the patient. Finally, the specification describes an embodiment in which the radiotherapy source is controlled based on the CBCT scan of the patient.

During prosecution, applicants originally sought broad claims to radiotherapy systems with a radiation source, cone-beam x-ray source and FPI, and computerized control of the radiation source based on the CBCT image. But as

Examiner Ho noted, every one of these limitations were already known in the prior art "Swerdloff," "Hu," and "Roos" references:

> [T]he prior art discloses a radiation therapy system comprising a radiation source, a con-beam [sic] computed tomography system comprising an x-ray source and a flat-panel imager receiving x-rays after they pass through the object, the imager providing an image of the object, and a computer controls the path of the radiation source based on the image . . . .

(Ex. 1309, Apr. 20, 2004 Office Action, at 6.)

In response to rejections based on these prior art image-guided radiotherapy systems combined with CBCT-FPI systems, the applicants amended their claims to specify that the image "contains at least three dimensional information of said object based on one rotation of said x-ray source around said object." This amendment was the sole basis for Examiner Ho's allowance of the claims:

> [T]he prior art fails to teach or fairly suggest that the image contains at least three-dimensional information of the object based on one rotation of the x-ray source around the object as claimed.

(*Id.*) As explained below, the prior art Cho reference, which was not before the Examiner, did in fact disclose the element the Examiner believed was missing from the prior art.

B. The Challenged Claims of the ’502 Patent

This Petition addresses claims 43-46, 48-55, 57, 59, 60-66, and 68. The challenged claims include two independent claims presenting methods of the use of a system sharing the same basic elements. The sole difference between the two method claims is that claim 43 recites controlling the path of the radiation source beam, while claim 60 recites controlling “a radiation therapy treatment plan” (and “RTTP”). To aid in claim analysis, a table for comparison of these claims is set forth below (underlining the distinct element in Claim 60):

Claim 43	Claim 60
A method of treating an object with radiation, comprising:	A method of treating an object with radiation, comprising:
move a radiation source about a path; direct a beam of radiation from said radiation source towards an object;	move a radiation source about a path; direct a beam of radiation from said radiation source towards an object;
emitting an x-ray beam in a cone beam form towards an object;	emitting an x-ray beam in a cone beam form towards an object;
detecting x-rays that pass through said object due to said emitting an x-ray beam with a flat-panel imager; generating an image of said object from said detected x-rays, wherein said generating comprises forming a computed tomography image of said object based on said detected x-rays,	detecting x-rays that pass through said object due to said emitting an x-ray beam with a flat-panel imager; generating an image of said object from said detected x-rays, wherein said generating comprises forming a computed tomography image of said object based on said detected x-rays,
wherein said image contains at least three dimensional information of said object based on one rotation of said x-	wherein said image contains at least three dimensional information of said object based on one rotation of said x-

ray source around said object;	ray source around said object;
and controlling said path of said radiation source based on said image.	and controlling <u>a radiation therapy treatment plan involving said radiation source</u> based on said image.

The remaining challenged claims are all dependent claims that incorporate the above limitations by reference, but add nothing of patentable significance. The specific arguments of invalidity of all challenged claims are set forth in detail in the specific grounds below.

VI. CLAIM CONSTRUCTION UNDER 37 C.F.R. § 42.104(b)(3)

A claim subject to *inter partes* review must be given its "broadest reasonable construction in light of the specification of the patent in which it appears." 37 C.F.R. § 42.100(b). As the Federal Circuit has recognized, the "broadest reasonable" construction standard is fundamentally different from the manner in which the scope of a claim is determined in litigation. *See In re Swanson*, 540 F.3d 1368, 1377-78 (Fed. Cir. 2008). Accordingly, the constructions proposed in this Petition represent the broadest reasonable interpretation that one of ordinary skill in the art would assign to the terms below, and not necessarily the construction that would be appropriate in litigation.[1] For claim terms not addressed below, Petitioner has applied the plain and ordinary meaning of those terms.

A. "based on one rotation"

This term appears in independent claims 43 and 60. The proper construction of this term is "based on a single complete, 360° degree rotation." The term was added during prosecution to differentiate the prior art references. Specifically, the '502 applicants argued that the prior art cited by the Examiner did not render the claims obvious because they could not form a usable 3-D image based on a single complete rotation of the CBCT-FPI system around the object. Instead, applicants argued, these prior art systems required multiple rotations around the object in a helical or spiral scan approach in order to generate a 3-D image. For example, the applicants stated that the prior art x-ray device "could not form a usable image based on just one rotation of the x-ray source …." (*See* Ex. 1310, Jan. 23, 2004 Applicant Remarks, at 37 (emphasis added).)

The claims of the patent reciting this element, therefore, should be construed such that a single full rotation (through 360°) around the object being imaged is required. This construction comports with the express teachings of the

---

[1] Petitioner reserves the right to seek different constructions for terms of the '502 patent claims, as appropriate, in district court litigation.

specification. For example, in the "Preferred Embodiments," the specification refers to the CBCT system of Figure 3 and states:

> The flat plane [sic] imager **326** is positioned such that the piercing point (i.e., the intersection of the central ray and the image plane) is centered on the imaging array (i.e., between columns #**256** and #**257**, ±0.01 mm), with a quarter-pixel offset applied to give improved view sampling for <u>cone beam computerized tomography acquisitions in which the object **316** is rotated through 360°</u>.

('502, 7:64-8:4 (emphasis added).) Thus, one of skill in the art would understand that the "based on one rotation" element of the claims means that the CBCT system necessarily requires a single complete, 360° rotation around the object to obtain its 3-D image (*See* Ex. 1302, ¶¶ 35-36.)

B. "three dimensional information"

This term appears in independent claims 43 and 60. The term should be construed as "information concerning three dimensions of an object (such as length, width, and depth)." This construction is confirmed by the specification, which states that three-dimensional information is obtained from a plurality of 2-D images obtained from different angles. ('502, 3:40-43 ("a cone beam computerized tomography system reconstructs three-dimensional (3-D) images from a plurality of two-dimensional (2-D) projection images acquired at various angles about the subject.").) One of ordinary skill in the art would understand "three-dimensional information" as "information concerning three dimensions of an object (such as length, width, and depth)." (*See* Ex. 1302, ¶ 37.)

VII. GROUND 1 – CLAIMS 43-46, 48-55, 57 & 59 ARE OBVIOUS OVER CHO, ANTONUK, JAFFRAY 1997, AND ADLER/DEPP UNDER 35 U.S.C. § 103(A)

A. Introductory Comments

As noted, above, Petitioner has concurrently submitted another petition challenging claims 43-46, 48-55, 57 & 59 based on different prior art, asserting that the claims are not entitled to the '590 provisional that is claimed on the cover of the '502 patent. However, there is a theoretical possibility that Patent Owner is able to establish that it is entitled to priority based on the '590 provisional – which Petitioner denies as explained in its concurrent petition. In light of this theoretical possibility, however, Petitioner submits the grounds in this petition, relying only on references that qualify as § 102(b) art regardless of which priority date is accorded to the challenged claims. Petitioner respectfully requests institution of *inter partes* review of the challenged claims based on all the grounds in both petitions because each ground presents unique, non-redundant issues central to the patentability of the challenged claims.

B. Prior Art and Date Qualification for Ground 1

Each limitation of claims 43-46, 48-55, 57 & 59 is disclosed or suggested by P.S. Cho *et al.*, *Cone-beam CT for radiotherapy applications*, Physics in Medicine and Biology, 40:1863-83 (1995) **[Ex. 1305] ("Cho")**, L.E. Antonuk *et al.*, *Thin-Film, Flat-Panel, Composite Imagers for Projection and Tomographic Imaging*, IEEE Transactions on Medical Imaging, 13:482-90 (1994) **[Ex. 1306] ("Antonuk")**, D.A. Jaffray *et al.*, *Exploring "Target Of The Day" Strategies for A Medical Linear Accelerator With Conebeam-CT Scanning Capability,* Proceedings of the 12th International Conference on the Use of Computers in Radiation Therapy, Medical Physics Publishing, pp. 172-75 (1997) **[Ex. 1307] ("Jaffray 1997")**, U.S. Patent No. 5,207,223 issued to Adler *et al.*, published on May 4, 1993 **[Ex. 1303] ("Adler")**, and U.S. Patent No. 5,427,097 issued to Depp, published on June 27, 1995 **[Ex. 1304] ("Depp")**.[2] All these references qualify as prior art under at least § 102(b) (pre-AIA) because they were published more than one year before February 18, 2000, the filing date of the earliest application appearing on the face of the '502 patent. Cho, Antonuk, and Adler/Depp were not before the Office during examination or considered by the Examiner prior to issuance of the patent.

---

[2] As discussed below, Adler and Depp are treated as a single reference for this petition because Depp expressly incorporates Adler by reference and describes itself as an improvement of Adler's disclosure. The disclosures are collectively referred to herein as "Adler/Depp."

C. Brief Description of Cho, Antonuk, Jaffray 1997, and Adler/Depp

Cho [Ex. 1305], entitled "Cone-beam CT for radiotherapy applications," discloses the use of cone beam CT for patient imaging in the treatment position on a radiotherapy simulator. Cho notes that detector size was an existing limitation in 1995 for the clinical implementation of CBCT. (*See* Cho, at 5.) Cho discloses the use of the same Feldkamp algorithm referenced in the '502 patent for 3-D image reconstruction from a plurality of 2-D cone-beam projection images. (*See id.*, at 6; *see also* '502, 11:9-21.) Also like the '502 applicants, Cho obtained 3-D image data by rotating the gantry 360°, using diagnostic x-rays of approximately 100 kV. (*See* Cho, at 15-16.) Cho also reported the benefits of using kV CBCT for differentiation of soft tissue. (*See id.*, at 22.) Cho also expressly suggested the use of amorphous silicon flat panel imagers to solve the problem of detector size for rapid acquisition of 3-D images using CBCT, citing to the 1994 Antonuk reference discussed below. (*See id.*, at 24.)

Antonuk [Ex. 1306], entitled "Thin-Film, Flat-Panel, Composite Imagers for Projection and Tomographic Imaging," describes the development of amorphous silicon flat panel imagers for use in diagnostic imaging in the radiotherapy setting. Specifically, Antonuk teaches the dual use of kV and MV "real-time flat panel composite imagers" "helping to resolve the patient localization and verification problem in megavoltage radiography." (Antonuk, at

3.) Antonuk taught that radiotherapy could be improved by reduction of uncertainty about the location of the tumor within the patient's healthy surrounding anatomy, and that "[I]t is widely perceived that part of the solution is to obtain imaging information with the portal beam immediately prior to and/or during the treatment." (*Id.*, at 5.) As Antonuk recognized, the state of the art in 1994 included use of megavoltage imaging devices to obtain patient location verification. (*Id.*) Antonuk explained, however, that "[a] major limitation in the general approach of using only the megavoltage images is the limited spatial and contrast resolution of the resulting images…. In comparison, diagnostic x-ray images offer excellent spatial and contrast resolution due to the dominance of photoelectric interactions." (*Id.*) As explained elsewhere in Antonuk, "diagnostic x-ray images" refers to images obtained using x-ray beams of kV rather than MV energy. (*See id.*, at 3 (defining diagnostic quality x-rays as having energies of 20 to 150 kVp); *see also* Ex. 1302, ¶ 42.)

Antonuk proposed several configurations for use of his dual kV and MV flat panel approach, including mounting a kV imager on an MV radiotherapy device and using a single dual-energy detector to capture both kV and MV images:

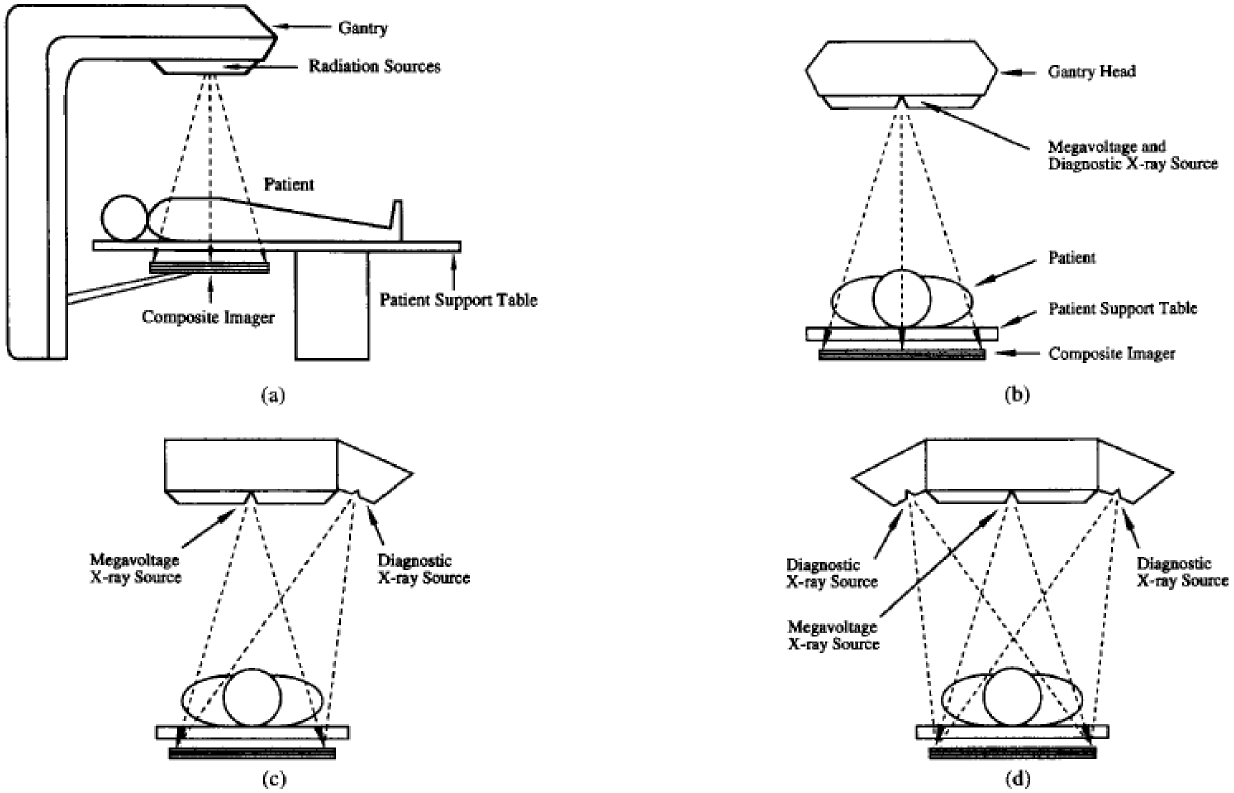

(Ex. 1306, Antonuk, at 7 (Fig. 5).) The flat panel imager of Antonuk "would be attached to the gantry of the therapy machine thereby rotating with it in the same fashion as present real-time megavoltage imagers." (*Id.*, at 6.) Antonuk disclosed the use of FPI detectors for realtime patient imaging: "The recent development of large-area, flat-panel a-Si:H imaging arrays is generally expected to lead to real-time diagnostic and megavoltage x-ray projection imagers …." (*Id.*, at 3.) Antonuk also taught the use of kV x-rays in cone-beam form with image detection by a flat panel. (*See id.*, at 8.)

Jaffray 1997 [Ex. 1307], entitled "Exploring 'Target Of The Day' Strategies for A Medical Linear Accelerator With Conebeam-CT Scanning

Capability," discloses the use of CBCT on a medical linear accelerator. (Jaffray 1997, at 4.) Jaffray 1997 suggests that radiotherapy could be improved by imaging systems coordinated with radiotherapy: "A solution to the dose limits imposed by margins is to locate the clinical target and surrounding normal structures on a fraction-by-fraction basis." (*Id.*) Indeed, Jaffray 1997 recognized that this suggestion was not new: "Other investigators have recognized the potential advantages of integrating a volumetric imaging system with the radiation delivery system." (*Id.*) Jaffray 1997 described the addition of a cone-beam system to a radiotherapy device: "To this end, we are developing a [CBCT] scanner for installation on our medical linear accelerator." (*Id.*) The authors expected the integration of CBCT onto a medical linear accelerator to be successful: "Current imaging technology should allow the construction of a conebeam computed tomography imaging system which is capable of providing image quality comparable to conventional CT at a modestly higher dose." (*Id.*) The authors disclosed the integration of a CBCT imaging system into a medical linear accelerator system, all mounted on a gantry that would obtain three-dimensional image data by rotating around the patient:

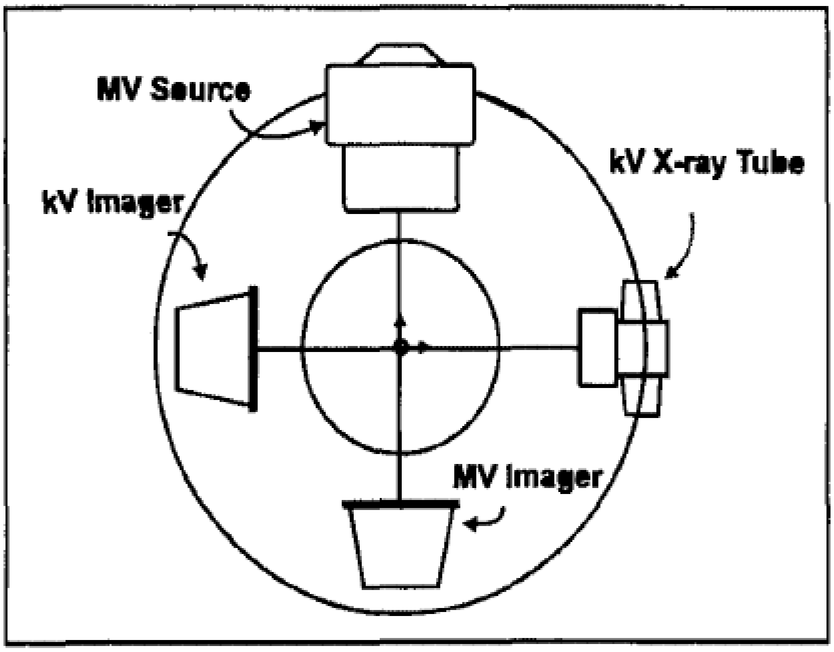

Figure 1: Schematic of dual-beam system to be used for conebeam computed tomography (CBCT). The kV x-ray beam is orthogonal to the treatment beam.

(*Id.*, at 5 (Fig. 1).) The authors employed a CCD-camera for the purpose of obtaining an image from the x-ray source. (*Id.*, at 4.)

Adler [Ex. 1303], entitled "Apparatus for and Method of Performing Stereotaxic Surgery," discloses systems for selectively irradiating a target within a patient. Adler discloses use of diagnostic x-ray imaging, 3-D image mapping of target lesions, and adjustment of the radiotherapy source if needed to ensure targeted delivery of the radiation dose. Like the '502 applicants, Adler recognized the benefit of accurately targeting high doses of radiation to a tumor while avoiding unnecessary irradiation of surrounding healthy tissues. (Adler, 3:34-52.) To solve the problem of prior localization of tumor targets within a patient, Adler provides a system in which a 3-D "map" of the patient is compared against diagnostic x-ray scans, to obtain "the real time location of the target region" within the patient. (*Id.*, 5:10-39.) Based on this real-time information, the relative position of the radiosurgical apparatus and the patient can be adjusted to ensure proper aim at the target region. (*Id.*)

As shown in Figure 4 of Adler, the process is under computer control, in which x-ray image information is processed and control signals are sent to the "linac manipulator" which controls the therapeutic beam:

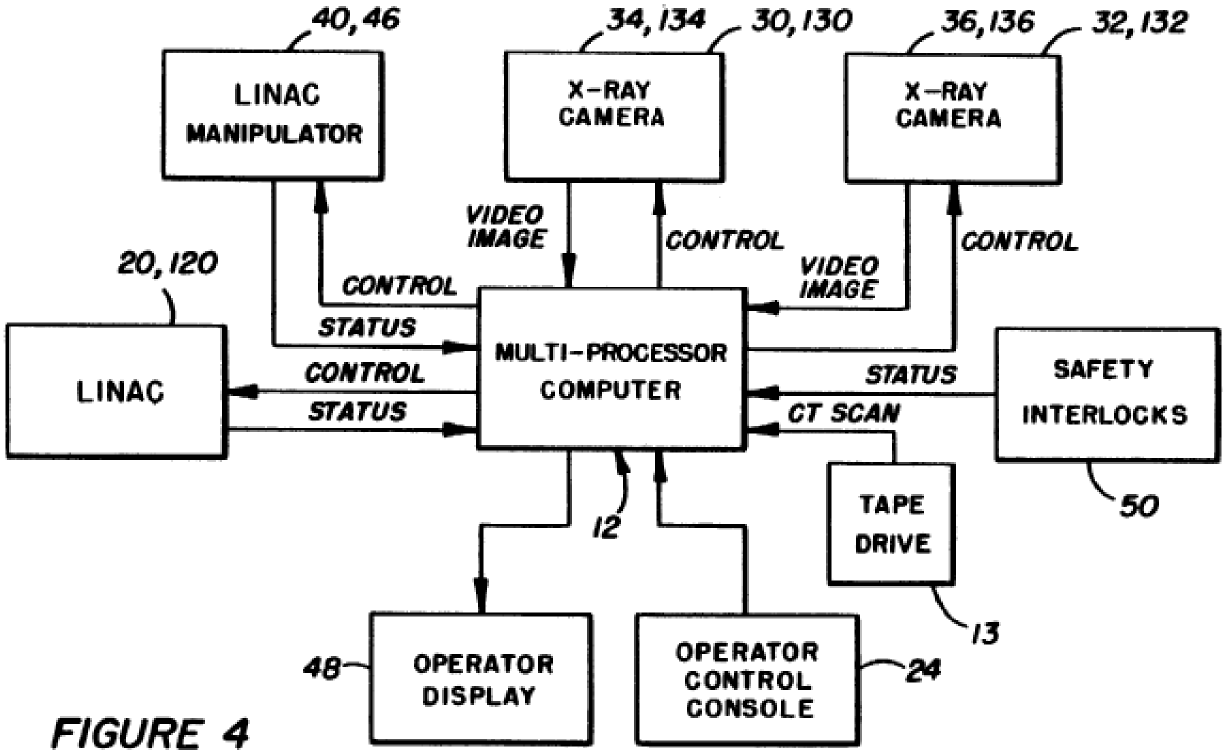

FIGURE 4

SYSTEM BLOCK DIAGRAM

(*Id.*, Fig. 4.)

Depp [Ex. 1304] shares a similar title and the same assignee as Adler and describes itself as describing improvements to the method and apparatus disclosed in Adler, which Depp incorporates by reference. (Depp, 1:12-17.) Among other improvements, Depp describes "a unique temporal procedure for operating the radiosurgical beam and the diagnostic target locating beams in order to continuously locate the target region in substantially real time." (*Id.*, 7:42-45.) Thus, Depp expressly teaches a device in which diagnostic images are used to ensure proper targeting of the treatment beam in real time.

D. Cho, Antonuk, Jaffray 1997, and Adler/Depp Disclose Each Limitation of Claims 43-46, 48-55, 57 & 59

1. Challenged Independent Claim 43

The preamble of claim 43 recites: "A method of treating an object with radiation, comprising." Although the preamble may not be limiting under its broadest reasonable construction, Adler/Depp, Antonuk, and Jaffray 1997 disclose it. As explained in more detail in connection with the claim limitations that follow, Adler/Depp discloses methods of treating an object with radiation by virtue of teaching radiotherapy using a medical linear accelerator device. (*See* Adler, Abstract, 3:62-68; Depp, Abstract, 1:6-12, 1:18-26; *see also* Ex. 1302, ¶¶ 47-48.) As shown in Figure 1 of Adler, for example, Adler/Depp disclose a system for delivering radiotherapy to a patient:

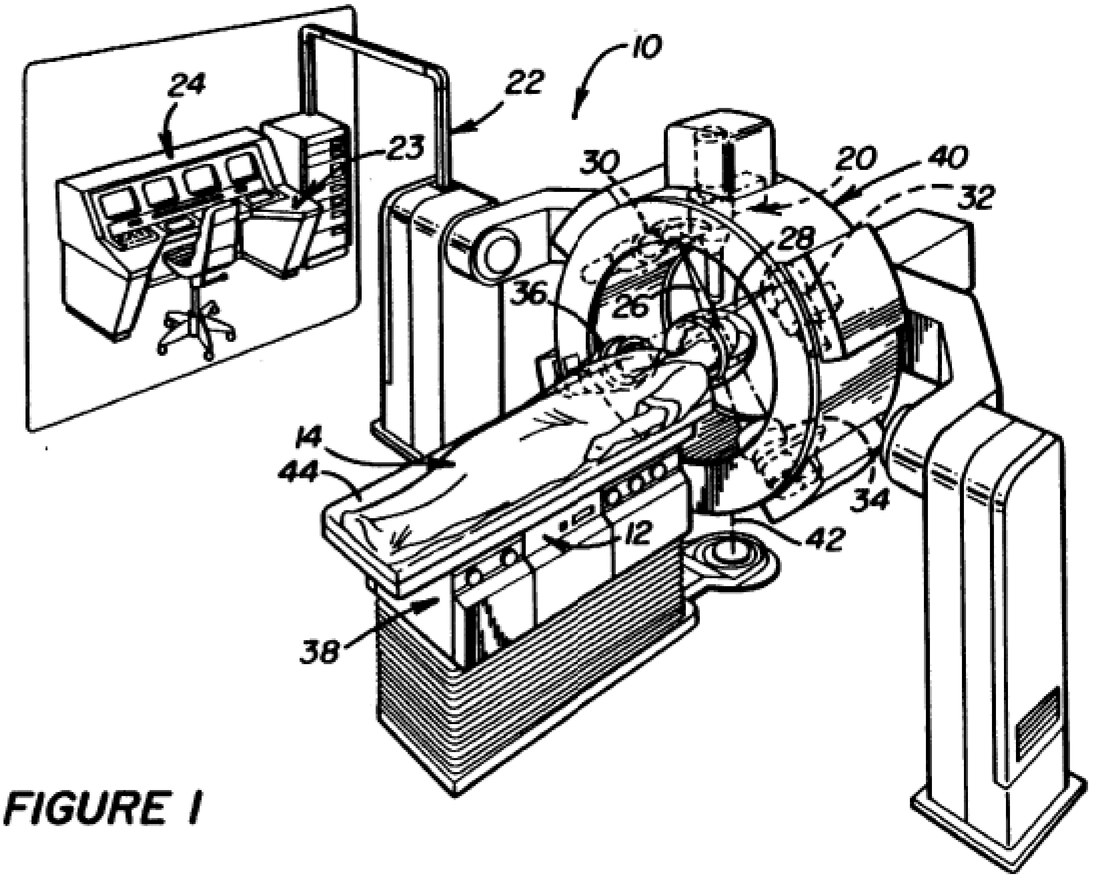

FIGURE I

(Adler, Fig. 1; *see also* Depp, Fig. 1.)

Adler/Depp also teaches an alternative embodiment in which the radiation source is contained in a mechanism having six degrees of movement freedom (as opposed to being within the gantry **40** shown in Adler's Figure 1). (*See* Adler, Fig. 3; *see also* Depp, Fig. 3.) Antonuk and Jaffray 1997 also expressly disclose methods of treating an object with radiation by virtue of teaching radiotherapy using a medical linear accelerator device. (*See* Section VII-C.)

a. **"move a radiation source about a path; direct a beam of radiation from said radiation source towards an object"**

As discussed with respect to the claim preamble, Adler/Depp teaches systems with a radiation source that moves with respect to the patient (the "object") and directs a beam of radiation toward that object: "A beaming apparatus **20** is provided which, when activated, emits a collimated surgical ionizing beam of a strength sufficient to cause the target region **18** to become necrotic." (Adler, 6:44-47; *see also* Depp, 4:19-22.) As explained by Adler/Depp, their radiation source moves:

> The broad range of adjustment of the relative positions of the gantry **40** and the patient **14** allows the collimated beam to be continuously focused on the target region while the healthy tissue through which the collimated beam passes is changed, as by rotating the beaming apparatus **20** through as much as 360° about the patient.

(Adler, 7:52-58; *see also* Depp, 5:25-31.) As explained by Dr. Balter, the reference to a medical linear accelerator would have been understood by one of ordinary skill in the art as a teaching of a system comprising a radiation source that moves about a path and directs a beam of radiation toward an object (usually a radiotherapy patient). (*See* Ex. 1302, ¶¶ 50-51.) For the same reason, this claim element is also taught by Antonuk and Jaffray 1997, both of which disclose medical linear accelerators that possess this claim element. (*See id.*)

b. “emitting an x-ray beam in a cone beam form towards an object”

Cho and Jaffray 1997 both expressly disclose a CBCT x-ray system that moves around the object, emitting multiple x-ray beams in cone-beam form. Cho describes “development of a cone-beam CT system for radiotherapy applications.” (Cho, at 5.) The publication details the construction of a CBCT system for generating a 3-D image by rotating an x-ray source around an object. “The projection data were obtained by rotating the gantry over 360° at approximately 1° increments.” (*Id.*, at 15.) “The scans were performed using 100 kV x-rays except for the chest scan in which case 120 kV was used.” (*Id.*, at 16.) Cho notes that their system used an “SLS simulator,” which was an Elekta product. As explained by Dr. Balter, this disclosure is an express disclosure of passing multiple x-ray beams in cone beam (“CB”) form through said object from different angles. (*See* Ex. 1302, ¶ 52.)

Jaffray 1997 also discloses 3-D imaging using a cone beam CT apparatus mounted to a linear accelerator: “[w]e are developing a conebeam-computed tomography (CB-CT) scanner for installation on our medical linear accelerator.” (Jaffray 1997, at 4.) Jaffray 1997 discussed the mounting of this system on an Elekta SL-20 linear accelerator, and provided an image of the arrangement (reproduced above in Section VII-C). (*See id.*, at 5 (Fig. 1).) Jaffray 1997 also teaches obtaining 3-D information from a plurality of 2-D projection images obtained by rotating the gantry around the patient. (*Id*.) Thus, like Cho, this reference expressly teaches passing multiple cone-beam x-rays through an object from multiple angles. As confirmed by Dr. Balter, one of skill in the art would recognize in these teachings an express disclosure of this claim element. (*See* Ex. 1302, ¶ 53.)

As explained by Dr. Balter, the Antonuk reference also teaches the use of cone-beam x-ray CT imaging, because the x-ray source of Antonuk emits x-rays in a cone beam form for detection on a large 2-D array in the form of an FPI. Indeed, as explained by Dr. Balter, any x-ray source emits beams in cone-beam geometry, unless that x-ray source further comprises a collimator to shape the beam into a fan shape or other geometry. Thus, as Dr. Balter explains, the x-ray beam paths shown in Figure 5 of Antonuk expressly show x-rays being emitted in a cone-beam shape. (*See* Ex. 1302, ¶ 54.)

c. "detecting x-rays that pass through said object due to said emitting an x-ray beam with a flat-panel imager; generating an image of said object from said detected x-rays, wherein said generating comprises forming a computed tomography image of said object based on said detected x-rays"

Cho expressly teaches the use of an amorphous silicon flat panel imager to detect the cone-beam x-rays passing through the object. According to Cho, flat panel imagers would be advantageous for solving the problem of detector size in large-area 3-D CT imaging:

> Further increase in volume of reconstruction can be accomplished by … using a larger detector. The flat panel detector based on amorphous silicon (a-Si:H) technology is being developed as a potential real-time diagnostic x-ray imager (Antonuk *et al* 1994).

(Cho, at 24.) As noted above, Cho specially refers to Antonuk for its FPI.

Antonuk provides detailed disclosures of flat panel imagers for use as diagnostic x-ray detectors mounted on a linear accelerator for imaging during radiotherapy. Antonuk states that "The recent development of large-area, flat-panel a-Si:H imaging arrays is generally expected to lead to real-time diagnostic and megavoltage x-ray projection imagers …." (Antonuk, at 3.) As explained by Dr. Balter, FPI devices function as x-ray detectors by detecting multiple x-ray beams that pass through the object being imaged, for example as shown in Figure 5 of Antonuk. (*See* Ex. 1302, ¶¶ 55-56.)

Antonuk also provides an overview of the structure and operation of flat panel imager technology.

> The rapidly emerging technologies of thin-film transistors and photodiodes, under intense development for active matrix liquid crystal displays, solar cells, scanners, and copiers, have, over the last few years, been adapted to create the first two-dimensional, self-scanning amorphous silicon (a-Si:H) imaging arrays. Recently, the

> first high-quality, diagnostic and megavoltage x-ray images of low-contrast anatomical detail have been demonstrated using this new technology….

(Antonuk, at 3 (citations omitted).) Antonuk also separately discloses a flat panel imager receiving a plurality of 2-D x-rays in the geometry of a positron emission tomography machine: "Several a-Si:H x-ray detectors rotate with an x-ray tube collecting conebeam projection data inside the bore of a PET machine …." (*Id.*, at 8.) As confirmed by Dr. Balter, one of ordinary skill in the art would understand these teachings as disclosures of the use of an FPI to receive x-rays passing through an object for providing an image of the object.

d. "wherein said image contains at least three dimensional information of said object based on one rotation of said x-ray source around said object"

This limitation was expressly taught by Cho: "The projection data were obtained by rotating the gantry over 360° at approximately 1° increments." (Cho, at 15; *see also id.*, at 22 ("For our method, data were available through a full 360° rotation ….").) Cho thus taught obtaining 3-D information about an object based on a single full rotation of the x-ray source gantry relative to the object. Cho further discloses this element by teaching a computer-assisted system to create 3-D image based on a plurality of 2-D projection images from the cone-beam x-ray. Cho is directed to generating 3-D images based on 2-D CBCT scans using a modified Feldkamp algorithm. (*See* Cho, at 15-16 (discussing the scanning of CT phantom models using this approach); *id.*, at 17 (discussing image processing and use of reconstruction algorithms on a computer).) As explained by Dr. Balter, one of skill in the art would recognize Cho as teaching creation of a 3-D image based on one rotation of the CBCT system. (*See* Ex. 1302, ¶ 57.) Furthermore, the image reconstruction methodology employed by Cho, such as the Feldkamp algorithm, was well-known and in standard use for this purpose before 1999. (*See id.*)

Adler/Depp teaches the use of three-dimensional information about the object based on a plurality of 2-D projection images, because Adler/Depp teaches obtaining two x-ray images ("diagnostic beams **26** and **28**") at a "known non-zero angle relative to one another." (Adler, 7:6-12.) These beams are received by "[i]mage receivers **34** and **36**" and the resulting signals are passed to the "microprocessor **12**." (*Id.*, 7:17-23.) As confirmed by Dr. Balter, these images provide three-dimensional information. (*See* Ex. 1302, ¶ 58.)

e. "and controlling said path of said radiation source based on said image"

Adler teaches a computer ("the processor **12**") that is coupled to the x-ray imaging system, receives image information, and based on the image information, sends a signal to the radiation source to control its path. Adler teaches obtaining two x-rays ("diagnosic beams **26** and **28**") at a "known non-zero angle relative to one another." (Adler, 7:6-12.) These beams are received by "[i]mage receivers **34** and **36**" and the resulting signals are passed to the "microprocessor **12**." (*Id.*, 7:17-23.) Adler/Depp then teaches control of positioning based on this image: "[m]eans are provided for adjusting the relative position of the beaming apparatus **20** and the patient **14** as needed in response to data which is representative of the real time location of the target region **18** …." (*Id.*, 7:37-40.) Adler/Depp teaches that this adjusting may be done by moving the radiation source in the gantry or by moving the patient table:

> In the particular embodiment illustrated in FIG. 1 the means for adjusting the relative positions of the beaming apparatus and the patient comprises a gantry **40** to which the beaming apparatus **20**, the diagnostic x-ray generators **30** and **32** and the image receivers **34** and **36** are mounted along with conventional apparatus for lowering and raising the operating table **38** and for rotating it about an axis **42** and for tilting the top **44** of the operating table **38** about a longitudinally extending axis, all as illustrated by arrows in FIG. 2. The broad range of adjustment of the relative positions of the gantry **40** and the patient **14** allows the collimated beam to be continuously focused on the target region while the healthy tissue through which the collimated beam passes is changed, as by rotating the beaming apparatus **20** through as much as 360° about the patient.

(Adler, 7:42-58.) Finally, Adler/Depp notes that "FIG. 4 illustrates, in system block diagram form, operation of the logic by which the apparatus of FIG. 1 … can be controlled." (Adler, 8:32-34.) As Adler/Depp explains, "[s]ignals from the image receivers **34**,**134** and **36**,**136** are passed to the processor **12**." (Adler, 8:36-38.) Then, "[s]ignals from the processor **12** are passed to … the gimbal **40** thus controlling its positioning …." (*Id.*, 8:43-47.) As confirmed by Dr. Balter, these teachings would have been recognized by one of ordinary skill in the art as an express disclosure of a system comprising a computer connected to a moveable radiation source and a diagnostic x-ray imaging system, controlling the position of the radiation source based on multiple x-rays images. (*See* Ex. 1302, ¶¶ 59-60.)

Depp also teaches this element. Depp contains similar disclosures as Adler. (Depp, 6:13-40.) Depp further teaches that:

> The apparatus also utilizes a pair of [] diagnostic beams of radiation or target locating beams…. These beams are passed through the surrounding area containing the target region and reference points and, after passing through the surrounding area, contain data indicating the positions of the reference points within the surrounding area. This position data is collected by cooperating detectors, as described previously, and delivered to the multiprocessor computer where the latter compares it with previously obtained reference data for determining the position of the target region with respect to each of the reference points during each such comparison. The

> radiosurgical beam is accurately directed into the target region in substantially real time based on this information.

(Depp, 11:46-61.) Accordingly, this element was taught by the prior art. (*See* Ex. 1302, ¶ 61.)

2. Motivation to Combine Cho, Antonuk, Jaffray 1997, and Adler/Depp

Claim 43 is obvious because all elements of the claim were taught by the prior art, as explained above, and because one of ordinary skill in the art would have been motivated to combine them. As discussed above, during prosecution the Examiner was readily able to combine a prior art radiation therapy system (Swerdloff) with a prior art CBCT-FPI system (Hu and Roos), but believed the only element of the claims missing from the prior art was obtaining a 3-D image based on one rotation of the x-ray source around the object. However, as shown above, this element was shown expressly in the Cho reference, which was not before the Examiner.

It was known in radiotherapy to use diagnostic (kV) x-rays on a radiotherapy gantry to obtain diagnostic quality images to effect real-time control of a radiation source (Adler/Depp). It was also known to use cone beam imaging because of its superiority for 3-D imaging based on single rotation scanning (Cho and Jaffray 1997), and indeed it was known to use the exact type of flat panel imager used in the preferred embodiment of the ’502 patent (Cho and Antonuk). Because of the known benefits of CBCT, the known benefits of image-guided radiotherapy, and the express teaching in the prior art to use the same flat panel imager of the prior art CBCT system on a radiotherapy gantry, it was obvious to use the prior art CBCT/FPI system to control the prior art radiotherapy system because of the known benefits of improved imaging. Adler/Depp does not disclose the use of a CBCT-FPI system for performing this x-ray imaging, but it would have been obvious to obtain these elements from the Cho and Antonuk references to improve the accuracy of Adler/Depp's imaging during radiotherapy. As explained by Dr. Balter, CBCT-FPI was one of only a finite number of choices the artisan had in order to provide an obvious improvement on the radiation therapy control systems of Adler/Depp, and indeed the art specifically suggested this assembly. (*See* Ex. 1302, ¶¶ 62-64.)

One of skill in the art would have been motivated to combine the CBCT and FPI teachings of Cho with Jaffray 1997. Both articles teach a system to address problems in administering radiotherapy. While Jaffray 1997 discloses a need to confirm the precise location of the area targeted for radiation with CBCT, (*see* Jaffray 1997, at 4), Cho specifically states that its CBCT method can be used "for the purpose of treatment planning" in radiotherapy. (*See* Cho, at 22.) Cho further expressly suggests the use of an FPI as an x-ray detector, and cites the Antonuk reference, which provides detailed disclosures of flat panel imagers for use as diagnostic x-ray detectors mounted on a linear accelerator for imaging during radiotherapy.

It was also obvious to combine these teachings of Cho, Antonuk, and Jaffray 1997 with the radiotherapy system teachings of Adler/Depp. For example, Jaffray 1997 expressly suggests the usefulness of its disclosure in obtaining image-guided radiotherapy, and suggests the use of a cone beam x-ray for this purpose:

> A solution to the dose limits imposed by margins is to locate the clinical target and surrounding normal structures on a fraction-by-fraction basis. Allowing complete elimination of margins for beam placement discrepancies and target motion. Other investigators have recognized the potential advantages of integrating a volumetric imaging system with the radiation delivery system. In this article, a discussion of a 'Target of the Day' approach is presented with respect to the development of a medical linear accelerator with conebeam CT scanning capability…. Current imaging technology should allow the construction of a conebeam computed tomography imaging system which is capable of providing image quality comparable to conventional CT at a modestly higher dose…. For these reasons, we have begun to pursue the construction of a conebeam CT (CBCT) scanner for integration with a medical linear accelerator.

(Jaffray 1997, at 4 (citation omitted).) Antonuk provides a similar express suggestion: "It is widely perceived that part of the solution is to obtain imaging information with the portal beam immediately prior to and/or during the treatment." (Antonuk, at 5.) Finally, Adler/Depp teaches that improved x-ray image based targeting, in real-time, of internal lesions such as tumors is desirable to avoid irradiation of healthy surrounding tissues, and Cho provides an improved method for acquiring volumetric (3-D) CT image data using CBCT and an FPI. (*See* Adler, 2:49-53, 3:34-42, 5:40-54; Depp, Abstract, 1:55-65, 2:48-53, 11:54-61; Cho, at 24.)

Adler and Depp should be treated as a single reference because Depp states that it is an improvement of Adler, and incorporates it by reference. (*See* Depp, 5:35-55, 7:31-47.) One of skill in the art would be motivated to combine the Cho, Antonuk, and Jaffray 1997 references with Adler/Depp because all the references are in the same field of medical imaging in conjunction with radiation therapy and all are concerned with the problem of obtaining accurate 3-D information about the internal structure of objects like patients. (*See* Adler, 1:6-18; Depp, 1:6-18; Cho, at 5; Antonuk, at 3, 5; Jaffray 1997, at 4; *see also* Ex. 1302, ¶¶ 65-68.) As explained by Dr. Balter, the results obtained by the inventors (obtaining 3-D image information concerning target lesions in patients for the purpose of targeting the radiation source) were the predictable work of combining the CBCT-FPI system of the Cho and Antonuk references with the radiotherapy systems of Adler/Depp. (*See* Ex. 1302, ¶ 68.) Accordingly, the claimed combination was obvious. *See* MPEP § 2141 (III); *KSR Int'l Co. v. Teleflex Inc.*, 550 U.S. 98, 419-20 (2007); *see* *also Toshiba Samsung Storage Tech. Korea Corp. v. LG Elecs., Inc.*, IPR2014-00204, Paper No. 31 at 29 (P.T.A.B. Mar. 31, 2015).

3. Dependent Claim – 100 kV X-rays

a. Claim 44

Claim 44 depends from claim 43 and adds the limitation "wherein x-rays within said x-ray beam have an energy of approximately 100 kV." This limitation adds nothing of patentable significance. Cho expressly discloses the additional element of using beams of approximately 100 keV: "The scans were performed using 100 kV x-rays except for the chest scan in which case 120 kV was used." (Cho, at 16.) Jaffray 1997 also expressly discloses that its "kv image produced with a kV beam" is provided by a generator that can "produce up to 140 kVp x-ray exposures at 300 mA." (Jaffray 1997, at 4.) Antonuk also explained that "[a] major limitation in the general approach of using only the megavoltage images is the limited spatial and contrast resolution of the resulting images…. In comparison, diagnostic x-ray images offer excellent spatial and contrast resolution due to the dominance of photoelectric interactions." (Antonuk, at 5.) As stated elsewhere in Antonuk, the phrase "diagnostic x-ray images" refers to images obtained using x-ray beams of kV (rather than MV) energy. (*See id.*, at 3 (defining diagnostic quality x-rays as having energies of 20 to 150 kVp); *see also* Ex. 1302, ¶ 42.)

One of skill in the art would have been further motivated to combine

Adler/Depp with the CBCT kV diagnostic imaging teachings of Cho, Antonuk, and Jaffray 1997 because it was well-known by those of ordinary skill in the art that kV energy x-ray beams are superior to megavolt energy beams for imaging. As explained by Dr. Balter, the published work in the field clearly disclosed the superiority of kV beams over MV beams for imaging. (*See* Ex. 1302, ¶¶ 70-72.)

4. Dependent Claims – Rotation Claims

a. Claim 45

Claim 45 depends from claim 43 and adds the limitation “rotating about an axis of rotation said object relative to said x-ray source and said flat-panel imager.” Cho expressly discloses this element because it details the construction of a CBCT system for generating a 3-D image by rotating an x-ray source around an object. “The projection data were obtained by rotating the gantry over 360° at approximately 1° increments.” (Cho, at 15.) As explained by Dr. Balter, the claim recites rotation “relative” to the x-ray source, which under the broadest reasonable construction means that either the object or the x-ray source must rotate. Thus, from the point of view of the x-ray source, if the x-ray source is mounted on a rotating gantry as suggested by each of Cho, Antonuk, and Jaffray 1997, the object will “rotate” relative to the x-ray source as the gantry rotates around the object. (*See* Ex. 1302, ¶ 73.)

Adler/Depp also expressly discloses this element from the perspective of the stage performing the function of rotating:

> [T]he means for adjusting the relative positions of the beaming apparatus and the patient comprises a gantry **40** to which the beaming apparatus **20**, the diagnostic x-ray generators **30** and **32** and the image receivers **34** and **36** are mounted along with conventional apparatus for lowering and raising the operating table **38** and for rotating it about an axis **42** and for tilting the top **44** of the operating table **38** about a longitudinally extending axis ….

(Adler, 7:43-52 (emphasis added).) Thus, Adler/Depp expressly discloses a stage (operating table **38**) that rotates about an axis relative to the x-ray source.

As explained by Dr. Balter, one of ordinary skill in the art would have been motivated to combine the Cho and Adler/Depp references to obtain the method of claim 45 because these references teach the advantages of a patient stage or table that rotates relative to the axis of rotation of the x-ray source, and Cho teaches that one of the known benefits of cone-beam CT is the ability to obtain 3-D image information about an object based on a single rotation of the x-ray source relative to the object. (*See* Ex. 1302, ¶¶ 74-75.)

b. Claim 46

Claim 46 depends from claim 45, which depends from challenged claim 43, and adds the limitation "wherein said image is formed after one rotation of said body relative to said x-ray source and said flat-panel imager." Cho expressly discloses this element because it teaches the assembly of a CBCT-FPI system with an object stage that rotates through 360° as noted above for claim element 43(d). (*See* Section VII-D-1-d above.)

Furthermore, as explained by Dr. Balter, claim 46, like claim 45, recites rotation "relative" to the x-ray source, which means that rotation of the x-ray source around a stationary object accomplishes rotation of the object "relative" to the x-ray source. Thus, the rotation gantries of Cho, Antonuk, and Jaffray 1997 all encompass this limitation. (*See* Ex. 1302, ¶¶ 76-77.) One of ordinary skill in the art would have been motivated to obtain the method of claim 46 for the same reasons set forth above with respect to claim 45.

5. Dependent Claims – Flat Panel Imagers

a. Claim 48

Claim 48 depends from claim 43 and adds the limitation "wherein said flat-panel imager comprises an array of individual detector elements." This element is expressly disclosed by Antonuk (which is cited by Cho). Antonuk provides a schematic of the FPI of the system, expressly disclosing the operating configuration of multiple detector elements arranged in an array:

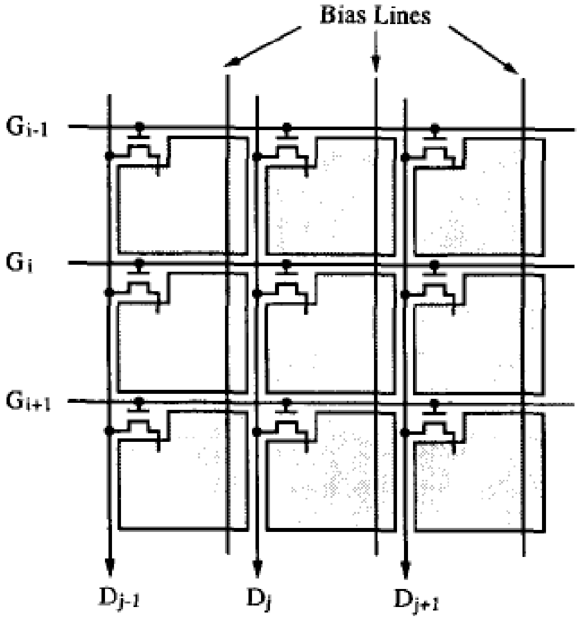

Fig. 2. Schematic diagram of the organization of a portion of a self-scanning, flat-panel a-Si:H imaging array. The sensing elements (shaded rectangular regions) are photodiodes which are coupled to field effect transistors (FETs). The FET control (GATE) lines and DATA lines are designated by symbols $G_{i\pm1}$ and $D_{j\pm1}$, respectively.

(Antonuk, at 4 (Fig. 2).) As Antonuk notes, "[t]he arrays consist of a regular two-dimensional matrix of imaging pixels, illustrated schematically in Fig. 2." (*Id.*, at 3.) As explained by Dr. Balter, this disclosure expressly teaches an array of detector elements (called "sensing elements" in the figure above). As this arrangement is a standard characteristic of an FPI, one of ordinary skill in the art would have been motivated to employ it. (*See* Ex. 1302, ¶¶ 78-79.)

b. Claim 49

Claim 49 depends from claim 48 and adds the limitation "wherein said array is a two-dimensional array." This element is also expressly taught by the same

Antonuk disclosure discussed for claim 48 above, which expressly identifies the FPI as a two-dimensional matrix. (*See* Antonuk, at 3.) Indeed, a key part of the motivation to use an FPI is its 2-D array status, which makes it appropriate for detection of the large 2-D projections obtained by using a cone-beam x-ray source. (*See* Ex. 1302, ¶ 80.)

c. Claim 50

Claim 50 depends from claim 48 and adds the limitation "wherein each of said individual detector elements comprises a-Si:H photodiode." This element is also expressly taught by the same Antonuk 1994 disclosure discussed for claim 48 above. As stated in the legend to Figure 2 reproduced above, the detector element comprises an a-Si:H photodiode. As explained by Dr. Balter, this limitation adds nothing of patentable significance, because the prior art expressly taught the use of FPIs comprising a-Si:H photodiodes. (*See* Ex. 1302, ¶ 81.)

d. Claim 59

Claim 59 depends from claim 43 and adds the limitation of "wherein said flat-panel imager is an amorphous silicon flat-panel imager." Cho expressly discloses this element: "Further increase in volume of reconstruction can be accomplished by … using a larger detector. The <u>flat panel detector based on amorphous silicon (a-Si:H) technology</u> is being developed as a potential real-time diagnostic x-ray imager (Antonuk *et al* 1994)." (Cho, at 24 (emphasis added).)

Antonuk, cited by Cho as shown above, provides detailed disclosures of flat panel imagers for use as diagnostic x-ray detectors mounted on a linear accelerator for imaging during radiotherapy. Antonuk states that "The recent development of large-area, flat-panel a-Si:H imaging arrays is generally expected to lead to real-time diagnostic and megavoltage x-ray projection imagers …." (Antonuk, at 3.) Antonuk explains that "[t]he arrays consist of a regular two-dimensional matrix of imaging pixels, illustrated schematically in Fig. 2. Each pixel consists of a thin-film transistor (TFT) coupled to an a-Si:H [amorphous silicon] n-i-p or p-i-n photodiode." (*Id.*) It would have been obvious to combine the radiotherapy systems of Adler/Depp with the CBCT apparatus of Jaffray 1997, using an amorphous flat panel imager, as expressly taught by Cho and Antonuk. One of ordinary skill in the art would have been motivated by this express suggestion and by the known benefits of FPI detectors that were disclosed in the prior art. (*See* Ex. 1302, ¶¶ 82-83.)

6. Dependent Claims – Object Imaging

a. Claim 51

Claim 51 depends from claim 43 and adds the limitation "further comprising correcting for offset and gain prior to said generating." This element is expressly taught by Antonuk. The '502 patent explains that "[p]rior to reconstruction, the projections are corrected for stationary pixel-to-pixel variations in offset and gain.

Defective pixels with significant variations in dark field signal or with aberrant signal response are median filtered." ('502, 10:63-66.) Antonuk discloses the same steps: "The two images have had a common dark and flood-field correction applied and the distracting influence of 6 line defects have been eliminated through the use of a median filter." (Antonuk, at 6 (citation omitted).)

The teachings of Antonuk quoted above are an express disclosure of offset and gain correction, prior to 3-D image generation. As explained by Dr. Balter, offset is the difference between "zero signal" and the dark field signal, and gain is a calibration based on the difference between the dark field and the flood field signals. Thus, Antonuk discloses the offset and gain correction of claim 51 because Antonuk teaches "dark … field correction" (offset) and "flood-field correction" (gain). (*See* Ex. 1302, ¶¶ 84-85.)

b. Claim 52

Claim 52 depends from claim 43 and adds the limitation "wherein said object comprises an animal." This element is expressly disclosed by Adler, which teaches the use of their system for therapy of human patients, particularly for brain cancer:

> Consequently, a new type of ionizing radiation therapy is provided for brain tumors, one that blends conventional radiation therapy techniques with surgical principles of accurate anatomic localization."

(Adler, 2:49-53.) As explained by Dr. Balter, it was obvious to use the method of claim 43 to image an animal, as the stated purpose of all of the prior art references cited herein was to improve image guided radiation therapy for use in humans. Humans are "animals" within the meaning of this claim, and furthermore it would have been obvious to apply these same methods to a non-human animal. (*See* Ex. 1302, ¶ 86.)

c. Claim 53

Claim 53 depends from claim 43 and adds the limitation "wherein said image delineates soft tissue within said animal." This element is expressly disclosed by Cho, which teaches that its CBCT methods provide good contrast delineation: "[s]oft tissue, air, and details of the bony structures are clearly delineated ...." (Cho, at 20.) As explained by Dr. Balter, it was obvious to arrive at the method of claim 43 because the ability to delineate soft tissue within the animal being imaged is important to discern the target tumor from surrounding healthy tissues. (*See* Ex. 1302, ¶ 87.)

d. Claim 54

Claim 54 depends from claim 43 and adds the limitation "wherein said soft tissue is selected from the group consisting of fat, a muscle, a kidney, a stomach, a bowel and a liver." This element is expressly disclosed by Cho, which teaches that its CBCT methods provide contrast sufficient to delineate muscle: "Phantom surface, lung and muscle substitutes, and bones have clear boundaries." (Cho, at 22.) As confirmed by Dr. Balter, claim 54 adds nothing of patentable significance because the tissue structures listed were well-known examples of soft-tissues that could be differentiated using diagnostic x-ray imaging techniques prior to 1999. (*See* Ex. 1302, ¶ 88.) It was well known in the field before 1999 to rely on phantoms to determine the soft-tissue delineation capabilities of an x-ray system, as Dr. Balter confirms. (*See id.*)

e. Claim 55

Claim 55 depends from claim 43 and adds the limitation "wherein said generated image is based solely on said detected x-rays, wherein said object is not moved by external devices during said detecting x-rays." This element is expressly disclosed by Adler: "[g]enerally, it is preferable to keep the patient **14** relatively stationary and to move the gantry **40**." (Adler, 7:59-61.) This element is also taught by Cho and Jaffray 1997, because both references do not require any movement of the object for their imaging systems. As explained by Dr. Balter, these references teach that images are obtained based solely on detected x-rays, and it was obvious to obtain imaging of the patient without moving the patient, if possible, to avoid causing any movement of internal structures within the patient during the imaging process. (*See* Ex. 1302, ¶ 89.)

f. Claim 57

Claim 57 depends from claim 43 and adds the limitation "wherein said object is located at a single position during said emitting and said detecting and remains at said position during said controlling." This limitation is taught by the same disclosures discussed above for claim 55—as Adler makes clear in the section quoted above, imaging and controlling of the path of the radiation source can be performed without movement of the patient. Claim 57 is thus obvious for the same reasons explained above for claim 55. (*See* Ex. 1302, ¶ 90.)

VIII. GROUND 2 – CLAIMS 60-66 & 68 ARE OBVIOUS OVER CHO, ANTONUK, JAFFRAY 1997, ADLER/DEPP, AND YAN UNDER 35 U.S.C. § 103(A)

A. Prior Art and Date Qualification for Ground 2

Yan qualifies as prior art under at least § 102(b) (pre-AIA) because it was published more than one year before February 18, 2000, the filing date of the earliest application appearing on the face of the '502 patent.

B. Brief Description of Yan

Cho, Antonuk, Jaffray 1997, and Adler/Depp are discussed in Section VII-C.

Yan [Ex. 1308], entitled "The Use of Adaptive Radiation Therapy to Reduce Setup Error: A Prospective Clinical Study," discloses systems and methods for image-guided radiotherapy. Yan's authors include David Jaffray and John Wong, two of the named inventors of the '502 patent and authors of the Jaffray 1997 reference. Yan expressly teaches that a radiation therapy treatment plan

("RTTP") can be modified based on 3-D imaging, including by making alterations to the shape of the radiation field by adjusting the MLC (multi-leaf collimator).

C. Cho, Antonuk, Jaffray 1997, Adler/Depp and Yan Disclose Each Limitation of Claims 60-66 & 68

1. Challenged Independent Claim 60

Independent Claim 60, like claim 43, is drafted in method form. Indeed, claim 60 is identical to claim 43 except that claim 60 recites "controlling a radiation therapy treatment plan" as opposed to the "controlling said path of said radiation source" of claim 43. For comparison purposes, the claims are reproduced in the side-by-side table above in Section V-B.

The element of controlling an RTTP based on three-dimensional image information concerning the object (patient) receiving radiotherapy was expressly disclosed in the art. Yan expressly teaches:

> [A] closed-loop treatment process will be used to apply the patient specific information measured during the treatment course <u>to reevaluate and to reoptimize the treatment plan</u>. An optimal way to implement this feedback process integrates new technologies such as a 3D treatment planning system, an on-line imaging device, and MLC [multi-leaf collimator] through an information and control network.

(Yan, at 11 (emphasis added).) Thus, as confirmed by Dr. Balter, Yan expressly teaches that the RTTP can be controlled based on 3-D imaging, including by making alterations to the shape of the radiation field by adjusting the MLC (multi-leaf collimator). This comports with the ’502 specification, which states that an RTTP can be controlled by “recalculation of the RTTP” (including to “modify the planning system to generate ‘corrected’ leaf positions.”). (’502, 25:56-57, 26:64-27:1; *see also* Ex. 1302, ¶ 93.)

2. Dependent Claims – Object Imaging

a. Claims 61-64, 66, and 68

Claims 61, 62, 63, and 64 recite the same additional limitations as claims 51, 52, 53, and 54, respectively. Thus these claims add nothing of patentable significance and are invalid for the same reasons set forth for those claims in Sections VII-D-6-a through d, respectively.

Claims 66 and 68 recites the same additional limitations as claims 55 and 57, respectively. Thus these claims add nothing of patentable significance and are invalid for the same reasons set forth for claims 55 and 57 in Sections VII-D-6-e and f, respectively.

3. Dependent Claim – Flat Panel Imagers

a. Claim 65

Claim 65 recites the same additional limitations as claim 59. Thus this claim adds nothing of patentable significance and is invalid for the same reasons set forth for claim 59 in Section VII-D-5-d.

D. Motivation to Combine Cho, Antonuk, Jaffray 1997, and Adler/Depp with Yan

The motivation to combine the Cho, Antonuk, and Jaffray 1997 references with Adler/Depp is discussed in detail in Section VII-D-2 above. One of ordinary skill in the art would further have been motivated to combine these teachings with Yan because Yan is directed specifically at the stated purpose of the ’502 patent – improving the accuracy and efficacy of radiotherapy through image-guided means. As noted above, Yan’s authors include two of the named inventors of the ’502 patent. Last, one of skill in the art would have been motivated to perform the methods of claims 60-66 and 68 based on the specific suggestions in Yan that state that use of 3-D imaging is an “optimal way” to implement the process of adjusting radiotherapy to account for patient variability, so as to more specifically target the tumor and avoid irradiation of healthy surrounding tissues. (*See* Ex. 1302, ¶ 97.)

IX. CONCLUSION

Petitioner respectfully requests institution of *inter partes* review of claims 43-46, 48-55, 57, 59, 60-66, and 68 of the ’502 patent, and a finding that those claims are unpatentable, based on the grounds presented in this Petition.

Dated: November 6, 2015

Respectfully submitted,

By: /Heidi L. Keefe/
Heidi L. Keefe
Reg. No. 40,673
Counsel for Petitioner
Varian Medical Systems, Inc.

COOLEY LLP
ATTN: Patent Group
1299 Pennsylvania Ave., NW, Suite 700
Washington, DC 20004
Tel: (650) 843-5001
Fax: (650) 849-7400

CERTIFICATE OF SERVICE

I hereby certify, pursuant to 37 C.F.R. Sections 42.6 and 42.105, that a complete copy of the attached **PETITION FOR *INTER PARTES* REVIEW OF U.S. PATENT NO. 6,842,502**, including all exhibits (**Nos. 1301-1335**) and related documents, are being served via Federal Express on the 6th day of November, 2015, the same day as the filing of the above-identified document in the United States Patent and Trademark Office/Patent Trial and Appeal Board, upon the Patent Owner by serving the correspondence address of record with the USPTO as follows:

Jonathan P. O'Brien, Ph.D.
Honigman Miller Schwartz & Cohn LLP
350 East Michigan Avenue, Suite 300
Kalamazoo, MI 49007

and upon counsel of record for the Patent Owner in the litigation pending before the U.S. District Court for the Eastern District of Michigan entitled *Elekta Ltd. and William Beaumont Hospital v. Varian Medical Systems, Inc.*, Case No. 2:15-cv-12169-AC-MKM, as follows:

J. Michael Huget
Deborah J. Swedlow
Sarah E. Waidelich
Honigman Miller Schwartz & Cohn LLP
315 East Eisenhower Parkway, Suite 100
Ann Arbor, MI 48108

Theresa M. Gillis
Brian A. Rosenthal
B. Clayton McCraw
Mayer Brown LLP
1221 Avenue of the Americas
New York, NY 10011

///

///

Andrew S. Rosenman
Amanda K. Streff
Mayer Brown LLP
71 South Wacker Drive
Chicago, IL 60606

DATED: November 6, 2015

/ Heidi L. Keefe /
Heidi L. Keefe
Reg. No. 40,673

COOLEY LLP
ATTN: Heidi L. Keefe
Patent Docketing
1299 Pennsylvania Ave. NW, Suite 700
Washington, D.C. 20004
Tel: (650) 843-5001
Fax: (650) 849-7400