UNITED STATES PATENT AND TRADEMARK OFFICE

BEFORE THE PATENT TRIAL AND APPEAL BOARD

NEVRO CORP.
Petitioner

v.

BOSTON SCIENTIFIC NEUROMODULATION CORP.
Patent Owner

PETITION FOR *INTER PARTES* REVIEW
OF U.S. PATENT NO. 8,650,747

Mail Stop "PATENT BOARD"
Patent Trial and Appeal Board
U.S. Patent & Trademark Office
P.O. Box 1450
Alexandria, VA 22313-1450

TABLE OF CONTENTS

EXHIBIT LIST

Exhibit No.	Description
1001	U.S. Patent No. 8,650,747 to Kuzma *et al.*
1002	U.S. Patent No. 8,650,747 File History
1003	Declaration of Michael Plishka
1004	*Curriculum Vitae* of Michael Plishka
1005	U.S. Patent Publication No. 2003/0199950 to Stolz *et al.*
1006	WO 00/35349 to Ormsby *et al*.
1007	U.S. Patent Publication No. 2004/0215300 to Verness
1008	U.S. Patent No. 6,216,045 to Black *et al.*
1009	*Intentionally Left Blank*
1010	Modern Plastics Encyclopedia, Volume 63, Number 10A (October 1986)
1011-1015	*Intentionally Left Blank*
1016	U.S. Patent No. 6,473,653 to Schallhorn *et al.*
1017	U.S. Patent Publication No. 2002/0013537 to Rock

Petitioner Nevro Corporation ("Nevro") requests *inter partes* review of claims 1-19 of U.S. Patent No. 8,650,747 ("the '747 patent") (Ex. 1001), which is assigned to Boston Scientific Neuromodulation Corporation ("BSNC").

I. Introduction

The independent claims of the '747 patent are directed to a "stimulation lead assembly for making a lead"—namely, an implantable lead that provides electrical stimulation therapy. In its most basic form, the stimulation lead described in the '747 patent has an electrode array at a distal end, and a plurality of corresponding conductive contacts at a proximal end. The distal-end electrodes stimulate the area where the lead is implanted, and the contacts at the proximal end are typically coupled to an implantable pulse generator. As applied herein, BSNC interprets these claims in the co-pending district court litigation to require a plurality of conductive wires that run the length of the lead body to couple the proximal end contacts to their corresponding distal end electrodes. The conductive wires run inside conductor lumens, which are hollow bores within the insulated lead body. Insulating spacers are disposed between individual adjacent distal-end electrodes and individual proximal-end contacts.

Part of this basic and well-known structure is laid out in the first three elements of independent claim 1 of the '747 patent:

> 1. A stimulation lead assembly for making a lead, the assembly comprising:
>
> [a] a lead body defining a central lumen extending along the lead body and a plurality of conductor lumens disposed circumferentially around the central lumen and extending along the lead body;
>
> [b] a plurality of electrically conductive contacts disposed along an end of the lead body, wherein a portion of each of the conductor lumens is disposed radially underneath the conductive contacts;
>
> [c] a plurality of conductor wires disposed in the conductor lumens, wherein at least one of the conductor wires is electrically connected to each conductive contact, wherein each conductor lumen comprises an occupied portion within which at least one of the conductor wires is disposed and an unoccupied portion in which none of the conductor wires is disposed, the unoccupied portion extending from an end of the conductor lumen;

Ex. 1001, 8:21-38.

The last two elements of claim 1 of the ’747 patent, focus very narrowly on unoccupied portions of the conductor lumen. The last two elements of claim 1 are reproduced below:

> [d] a solid, non-conductive material disposed, at least in part, radially underneath the conductive contacts and filling the unoccupied portion of at least one of the conductor lumens;…
>
> [e] wherein the non-conductive material is thermally fused with the lead body from heat applied to the lead assembly, which heat is at a

> temperature to cause the non-conductive material to thermally reflow or melt.

Ex. 1001, 8:39-46.

Independent claim 11 is broader than claim 1 because it does not recite the thermal reflowing of the non-conductive material. It merely defines the basic structure of an implantable lead known in the prior art, with "solid, non-conductive material disposed, at least in part, radially underneath the conductive contacts within portions of the conductor lumens not occupied by conductor wire." Claim 11 is reproduced for convenience below:

> 11. A stimulation lead assembly for making a lead, the assembly comprising:
>
> [a] a lead body defining a central lumen extending along the lead body and a plurality of conductor lumens disposed circumferentially around the central lumen and extending along the lead body;
>
> [b] a plurality of electrically conductive contacts disposed along an end of the lead body, wherein a portion of each of the conductor lumens is disposed radially underneath the conductive contacts;
>
> [c] a plurality of conductor wires disposed in the conductor lumens, wherein at least one of the conductor wires is electrically connected to each conductive contact; and
>
> [d] a solid, non-conductive material disposed, at least in part, radially underneath the conductive contacts within portions of the conductor lumens not occupied by conductor wire.

Ex. 1001, 9:4-21.

* * *

By January 11, 2005 (the earliest possible priority date for the ’747 patent), the field of implantable leads for providing electrical stimulation to a body was already mature. *See* Ex. 1003, ¶¶1–33. Many prior-art implantable leads at that time had the exact same basic structure recited in independent claims 1 and 11 of the ’747 patent, including the conductor lumen structure that the patentee relied upon to distinguish the Black reference. The claimed features, including the conductor lumen configuration, is readily seen in the Stolz reference. *See e.g.*, Ex. 1005, Stolz, FIGs. 4-5.

Moreover, the benefits of filling empty portions of a conductor lumen in an implantable lead were also well-known in the prior art. Indeed, Stolz itself heats and reflows thermoplastic material from its distal tip into an empty portions of its conductor lumens. Ex. 1005, [0035], [0036], [0046]. Stolz also discusses filling an isolation space below its contacts with epoxy. *Id.*, [0046]. Further, the Ormsby reference teaches why it is beneficial to fill empty conductor lumens, *see e.g.*, Ex. 1006, Ormsby, 7:3-10, while the Black reference teaches the specific technique of reflowing a spacer, for example, into the empty spaces of a conductor lumen beneath a contact, Ex. 1008, 7:12-24.

Nevro will thus prove in the petition below that the ’747 patent claims are nothing more than an incremental and obvious modification to well-known prior

art stimulation leads, and lead manufacturing techniques, available by January 2005.

II. Statement of Unpatentability Grounds for Claims 1-19 of the ’747 Patent

Nevro requests *inter partes* review of claims 1-19 of the ’747 patent and a determination that those claims are unpatentable based on the following ground:

Ground	Prior Art	Basis	Claims Challenged
1	Stolz, Ormsby, and Black	§ 103	1-19

The earliest possible priority date on the face of the ’747 patent is January 11, 2005. The prior art references cited for the ground above qualify as prior art to the ’747 patent under 35 U.S.C. § 102(b) for the following reasons:

- Stolz (Ex. 1005): U.S. Patent Publication No. 2003/0199950 to Stolz *et al.* qualifies as a prior art under 35 U.S.C. § 102(b) at least because its publication date is October 23, 2003, which is more than one year before January 11, 2005.
- Ormsby (Ex. 1006): WO 00/35349 to Ormsby *et al*. and qualifies as a prior art under 35 U.S.C. § 102(b) at least because its international publication date is June 22, 2000, which is more than one year before January 11, 2005.
- Black (Ex. 1008): U.S. Patent No. 6,216,045 to Black *et al*. qualifies as a prior art patent under 35 U.S.C. § 102(b) at least because it issued on April 10, 2001, which is more than one year before January 11, 2005.

Nevro also relies on the expert opinions of Michael Plishka (Ex. 1003) to prove that the challenged claims would have been obvious to a person of ordinary skill in the art by January 2005. Mr. Plishka's qualifications are listed in his CV (Ex. 1004).

III. Level of Ordinary Skill in the Art

Patent claims must be analyzed from the perspective of a person of ordinary skill in the art (a "POSA") at the time the claimed invention was allegedly invented by the patentee. If given the benefit of the earliest possible priority date on the face of the '747 patent, this appears to be the time period shortly before January 11, 2005.

Further, in ascertaining the appropriate level of ordinary skill in the art of a patent, several factors should be considered including (1) the types of problems encountered in the art; (2) the prior art solutions to those problems; (3) the rapidity with which innovations are made; (4) the sophistication of the technology; and (5) the educational level of active workers in the field of the patent. Moreover, a POSA is a person who is presumed to be aware of the pertinent art, thinks along the line of conventional wisdom in the art, and is a person of ordinary creativity.

In view of these factors, a POSA with respect to the '747 patent disclosure would have had general knowledge of implantable medical devices and various related technologies as of January 11, 2005. Further, a POSA would have had (1)

at least a bachelor's degree in a relevant life sciences field, mechanical engineering, electrical engineering, biomedical engineering, or equivalent coursework, and (2) at least one year of experience researching or developing implantable medical devices, and/or methods of their manufacture. *See*, Ex. 1003, ¶¶17-20.

IV. Claim Construction

In considering the scope and meaning of the claims of an unexpired patent (such as the '747 patent) in an *inter partes* review, the claim terms are to be given their broadest reasonable interpretation as understood by a POSA in light of the specification. *Cuozzo Speed Techs., LLC v. Lee*, 136 S. Ct. 2131, 2144-46 (2016); 37 C.F.R. § 42.100(b). Under this standard, absent any special definitions, claim terms or phrases are given their ordinary and customary meaning, as would be understood by a POSA in the context of the entire specification. *In re Translogic Tech., Inc.*, 504 F.3d 1249, 1257 (Fed. Cir. 2007).

In this petition, Nevro challenges the claims of the '747 patent under their broadest reasonable interpretations. The patentee did not use any unusual claim terms. Nor do any claim terms appear to be used outside their ordinary and customary meaning, as understood by a POSA and in view of the '747 patent specification, under the broadest reasonable interpretation. The patentee did not provide a glossary, and the patentee does not appear to have acted as its own

lexicographer for any term. The only term that the patentee appears to have expressly construed in the ’747 patent specification is the term “lead.” And there, the term is broadly construed as “an elongate device having any conductor or conductors, covered with an insulated sheath and having at least one electrode contact attached to the elongate device, usually at the distal portion of the elongate device.” Ex. 1001, 1:34-38. This construction is consistent with the broadest reasonable interpretation of the claims of the ’747 patent.

If the patent owner BSNC asserts that any other term specifically requires construction for this proceeding, Nevro reserves the right to challenge such construction, if necessary. And if the Board believes, after reviewing the petition or the patent owner’s preliminary response, that any claim term requires additional briefing, Nevro is willing to provide supplemental briefing. Petitioner Nevro also reserves the right to challenge in a different forum, such as in a U.S. District Court, that a claim of the ’747 patent is indefinite or has a claim scope that differs from its broadest reasonable interpretation.[1]

---

[1] Specifically, the ’747 patent is part of BSNC’s suit against Nevro. *See* Mandatory Notices, Section IX.B. *infra*. In that case the parties are currently engaged in claim construction. *See* Final Joint Claim Chart filed September 14, 2017, *Boston Scientific Corporation et al. v. Nevro Corp.*, Case No. 1:16-cv-01163

V. Summary of the Unpatentability Argument for Independent Claim 1.

The narrower independent claim 1 has every limitation of the broader independent claim 11. We thus summarize here Nevro's argument for why independent claim 1 is unpatentable under 35 U.S.C. § 103 over Stolz, Ormsby, and Black. The arguments apply equally for independent claim 11. This summary explains the motivation to combine the key references. It also serves as an overview of substantive positions that are explained in detail in the unpatentability ground set forth in more detail below.

Stolz (Ex. 1005) is the base reference. It discloses a stimulation lead having the same structure set forth in claim 1. Stolz teaches reflowing its distal tip into at least a portion of an unoccupied conductor lumen, and Stolz also discloses using epoxy, a non-conductive material, to fill an isolation space beneath a contact. To the extent that Stolz is missing an express teaching of "a solid, non-conductive material disposed, at least in part, *radially underneath the conductive contacts* and filling the unoccupied portion of at least one of the conductor lumens," any gap is met with the Ormsby and Black references. Specifically, Ormsby (Ex. 1006)

(D.E.D.); Revised Final Joint Claim Chart filed October 6, 2017, in the same case; *see also* Nevro Corp.'s Opening Claim Construction Brief, filed on October 13, 2017 in the same case.

provides the motivation to modify Stolz to fill the unoccupied portions of the conductor lumens and thermally fusing the same to the lead body. And Black (Ex. 1008), which was considered during prosecution of the application which led to the ’747 patent, teaches the specific technique of heating the spacers between the electrodes to reflow material into the spaces of a conductor lumen that are radially underneath a conductive contact, and thermally fusing the spacer material with the lead body—a teaching the Examiner did not appreciate at the time.

A. Overview of the ’747 patent

The ’747 patent is generally directed to the lead portion of an implantable system with a microstimulator 12 and a stimulation lead 18 having multiple electrodes 17 at a distal end of the lead. Figure 1 is illustrative and shows an array 18 of electrodes 17 at the distal end of lead 16:

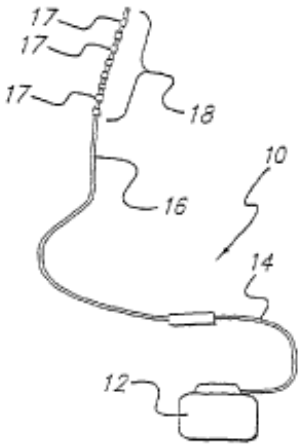

FIG. 1

Ex. 1001, FIG. 1; 3:46–57.

The microstimulator 12 and stimulation lead 16 are typically implanted in a body. *Id.*, 4:10–20. In one embodiment, it provides stimulation to a spine. *Id.*

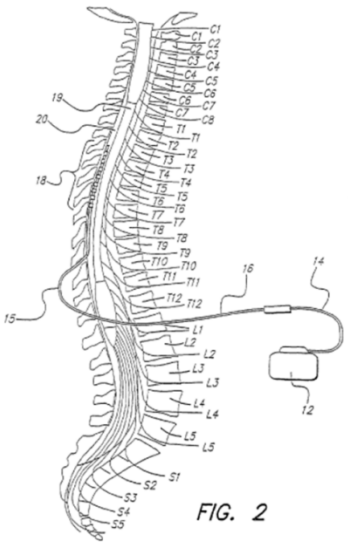

Ex. 1001, FIG. 2.

Figures 3A and 5A and 5B from the ’747 patent, annotated below in color, show the basic structure of an implantable lead made by the claimed method:

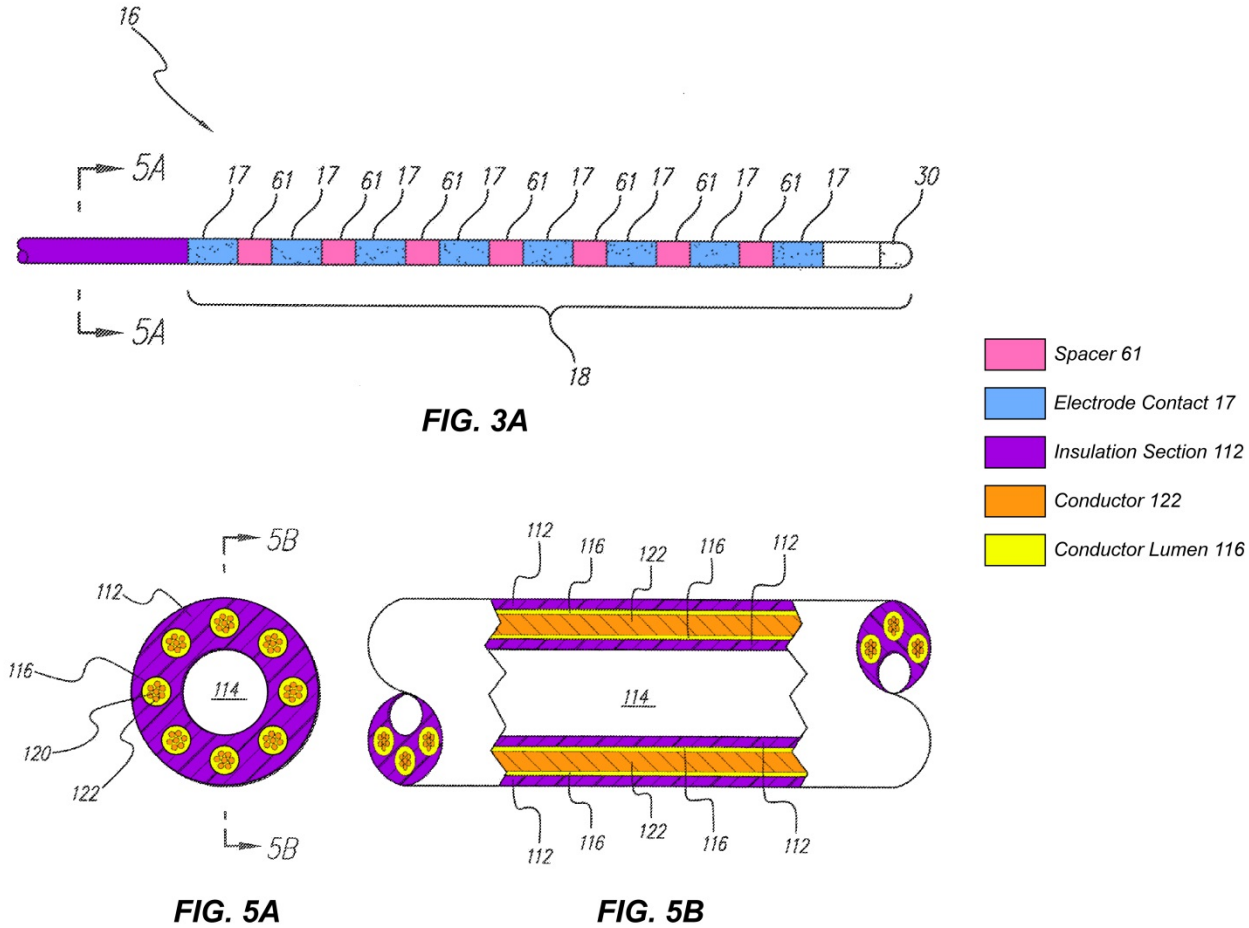

Ex. 1001 at FIGS. 3A, 5A, and 5B; *See also* Ex. 1003, ¶¶27–42.

Figures 5A and 5B of the ’747 patent show how the conductor lumens 116 (yellow) and conductors 122 (orange) are disposed in the stimulation lead body. Ex. 1001, 5:17-60. In the disclosed embodiment, the claimed stimulation lead 16 has an electrode array 18 (blue) at its distal end (i.e., the end furthest from the signal generator). Ex. 1001, 4:10-66. The basic structural components are the conductor wires 122 (orange), the conductive contacts (i.e., electrodes) 17 (blue), and the spacers 61 (pink) placed between the conductive contacts. *See id.* Each electrode contact 17 receives the stimulation signals from an attached conductor

122 that runs through a separate conductor lumen 116 (yellow) disposed along the length of the interior of the lead body. *See* Ex. 1003, ¶¶42–52.

The ’747 patent specification also discloses how to fill void space where the conductors are coupled to the electrode contacts, and how to fill any empty conductor lumen in the multi-lumen tube body.[2]

The described embodiment consists of placing a monofilament “inside the void space as shown in FIG. 6A, and inside any empty conductor lumens 116,” and then, with the assistance of shrink wrap, heating and reflowing either the monofilament, or the spacer, into the void space. *See* Ex. 1001, 7:35–45. *See also*, Ex. 1003, ¶¶53-56

The specific embodiment in Figures 6A and 6B of the ’747 patent illustrate both the structure and the steps of filling void space where the conductors are coupled to the electrode contacts, and how to fill any empty conductor lumen in the lead body.

---

[2] In the district court litigation, the parties have agreed that the term conductor lumen be construed as “a hollow bore within the lead body for one or more conductor wires” and the term lead body as “an insulated, multi-lumen tube.” *See* Revised Final Joint Claim Chart filed October 6, 2017, *Boston Scientific Corporation et al. v. Nevro Corp.*, Case No. 1:16-cv-01163 (D.E.D.).

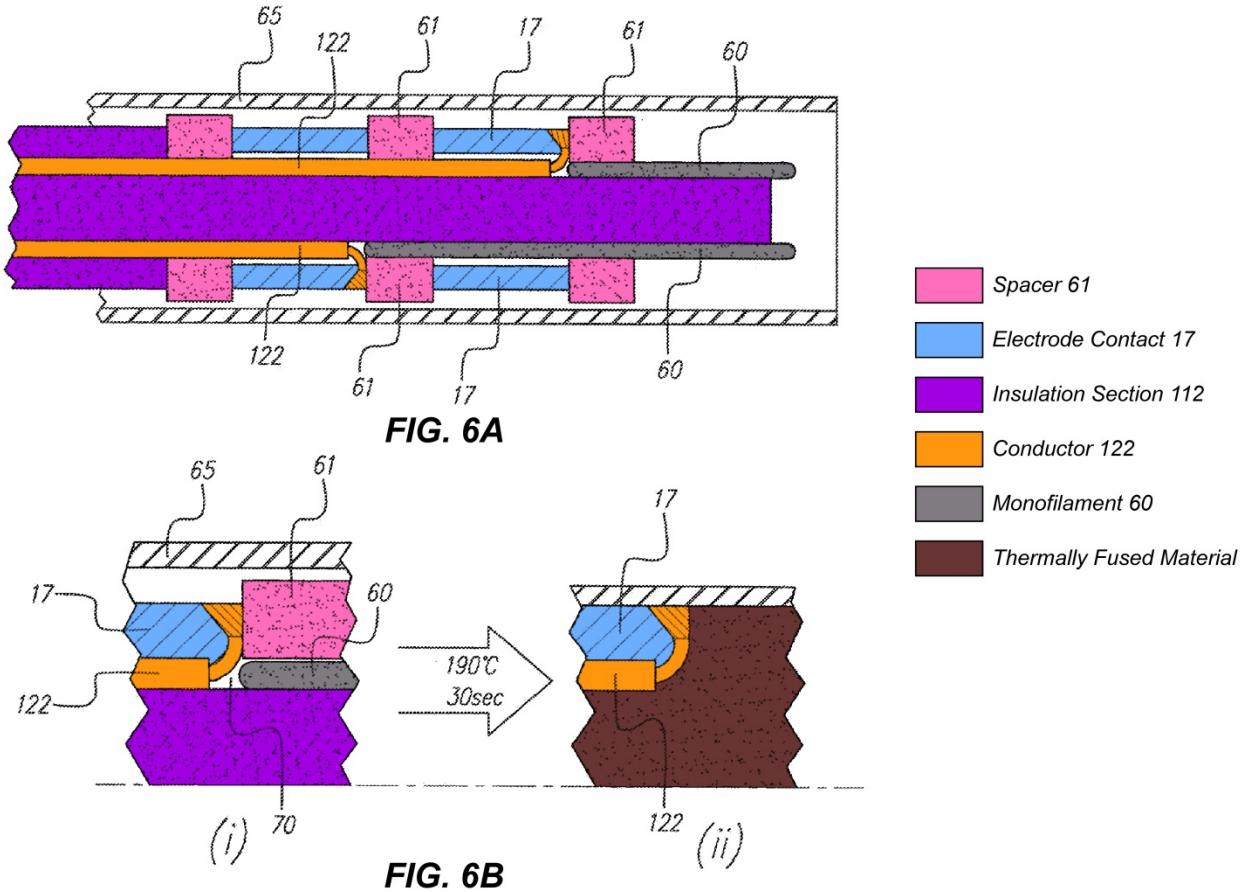

Ex. 1001 at FIGS. 6A and 6B; Ex. 1003, ¶¶53–70.

In the figures, monofilament 60 (which may be made from non-conductive material) is inserted into the void space up to the point where the conductor 122 attaches to the electrode 17 (i.e., the conductive contact). Element 70 denotes the void space near the electrode contact being at least partially filled by the monofilament 60. In the embodiment illustrated in Figure 6B, the structure of Figure 6A—including heat shrink tubing 65, spacer 61, and monofilament 60—is heated at 190 degrees Celsius for 30 seconds. This causes the spacer 61 and/or the

monofilament 60 to reflow, and then to fill a portion of the void space 70 near the electrode contact 17. Ex. 1001, 6:11-44, *see also* Ex. 1003, ¶¶52-58.

Claim 1 of the ’747 patent is broader than the embodiment set forth in Figures 6A and 6B. For example, it does not require insertion of monofilament. All it requires is that some sort of “solid, non-conductive material” is “disposed, at least in part, radially underneath the conductive contacts and filling the unoccupied portion of at least one of the conductor lumens.” Moreover, claim 1 is an “assembly”—i.e., a structure—and not a method claim. Consequently, claim 1 puts no restrictions on *how* the non-conductive material is “disposed, at least in part, radially underneath the conductive contacts and filling the unoccupied portion of at least one of the conductor lumens.” *See* Ex. 1003, ¶ 59.

As noted, independent claim 11 is even broader than claim 1—it has the same structural features, but does not include claim 1’s “wherein” clause that is directed to thermally reflowing the non-conductive material disposed in the conductor lumen into the lead body. So if independent claim 1 is found to be unpatentable, so is independent claim 11. *See id.* at ¶ 60.

The dependent claims cover additional obvious and incremental features. For example, dependent claims 2, 3, 13, and 14 further define inclusion of spacers and their relationship to the contacts and non-conductive material. Stolz and Black show this common feature. Dependent claims 4, 5, 8, 15, and 16 further define

material selection of the non-conductive material or material selection of the spacers. Material selection is obvious and the ’747 patent does not ascribe any importance or unexpected results to material selection. Dependent claims 6, 7, 17, and 18 further define the positioning of the contacts on either the proximal or distal end of the lead. Again, Stolz and Black show this common feature. Dependent claim 9 further defines that there is exactly eight conductor lumens. This is the same as Stolz’s disclosed embodiment. Dependent claim 10 further defines that the non-conductive material fills the unoccupied portion of each of the conductor lumens, instead of only at least one. And finally, dependent claim 19 merely restates the thermally fused feature of claim 1, except depending from broader independent claim 11. *See* Ex. 1003, ¶¶ 45-51.

B. The prosecution history

The prosecution history is instructive. The last amendment made prior to allowance included the “radially underneath” descriptor along with the specification that the conductor wires are “electrically” connected to the conductive contacts. Ex. 1002, Amendments to the Claims dated September 4, 2013. The amendment was apparently made to satisfy the Examiner’s objection to the claim as being indefinite under § 112. Ex. 1002 at 0047, 0058, 0059.

The primary prior art reference during prosecution of the application that led to the ’747 patent was U.S. Patent No. 6,216,045 to Black *et al.* (Ex. 1008). Ex.

1002 at 0059-0062, Office Action dated July 15,2014, pp. 3-6. The prosecution history reveals that the patentee focused primarily on the central lumen being surrounded by a plurality of conductor lumens disposed circumferentially around the central lumen. Ex. 1002 at 0047-0049, Reply dated September 4, 2013, pp. 7-9. The amended claim was then allowed. But as discussed below, Stolz discloses and renders obvious these features. The secondary argument advanced by the patentee in the prosecution history was that the applied art did not disclose "a solid, non-conductive material disposed, at least in part, radially underneath the conductive contacts and filling the unoccupied portion of at least one of the conductor lumens." But Black (Ex. 1008) discloses that feature, notwithstanding the Examiner's failure to appreciate it. As discussed below, Stolz too discloses and renders obvious these features in combination with at least Black and Ormsby. *See* Ex. 1003, ¶¶ 61-70.

Finally, the Examiner during prosecution applied no weight to the thermal fusing because he viewed it as a product-by-process element. *See* Ex. 1002 at 0058-0062, Office Action Dated July 15, 2013 at pp. 2-6. Indeed, "[t]he Patent Office bears a lesser burden of proof in making out a case of prima facie obviousness for product-by-process claims because of their peculiar nature" than when a product is claimed in the conventional fashion. *In re Fessmann*, 489 F.2d 742, 744 (CCPA 1974). Once the examiner provides a rationale tending to show

that the claimed product appears to be the same or similar to that of the prior art, although produced by a different process, the burden shifts to applicant to come forward with evidence establishing an unobvious difference between the claimed product and the prior art product. *In re Marosi*, 710 F.2d 799, 803 (Fed. Cir. 1983). The patentee did not provide any rebuttal to the lack of weight accorded by the Examiner.[3]

C. Independent claim 1 is unpatentable over Stolz, Ormsby, and Black.

Nevro first addresses the well-known parts of the claimed lead structure. It then addresses the incremental and obvious feature of non-conductive material disposed in the unoccupied portions of the conductor lumen that is "radially

[3] Even if the patentee had disputed the Examiner's characterization, it would have made no material difference to the rejection. *See In re Thorpe*, 777 F.2d 695, 697 (Fed. Cir. 1985) ("[E]ven though product-by-process claims are limited by and defined by the process, determination of patentability is based on the product itself. The patentability of a product does not depend on its method of production. If the product in the product-by-process claim is the same as or obvious from a product of the prior art, the claim is unpatentable even though the prior product was made by a different process.") (internal citations omitted).

underneath the conductive contacts," and where the non-conductive material is thermally fused with the lead body.

1. The basic parts of the stimulation lead assembly described by the '747 patent claims were well-known by January 2005.

Claim 1 of the '747 patent is a stimulation lead assembly for making a lead having the structure described above. The preamble and the elements [a]-[c], below, simply lay out a few of the most basic parts of a stimulation lead—namely, the lead body with conductor lumens, a plurality of contacts (e.g., electrodes), and conductor wires:

> 1. A stimulation lead assembly for making a lead, the assembly comprising:
> [a] a lead body defining a central lumen extending along the lead body and a plurality of conductor lumens disposed circumferentially around the central lumen and extending along the lead body;
> [b] a plurality of electrically conductive contacts disposed along an end of the lead body, wherein a portion of each of the conductor lumens is disposed radially underneath the conductive contacts;
> [c] a plurality of conductor wires disposed in the conductor lumens, wherein at least one of the conductor wires is electrically connected to each conductive contact, wherein each conductor lumen comprises an occupied portion within which at least one of the

> conductor wires is disposed and an unoccupied portion in which none of the conductor wires is disposed, the unoccupied portion extending from an end of the conductor lumen;

Ex. 1001, 8:21-38.

Stolz (Ex. 1005) discloses a stimulation lead with an identical arrangement of conductive contacts as claimed in the ’747 patent. Stolz’s Figure 3 is exemplary:

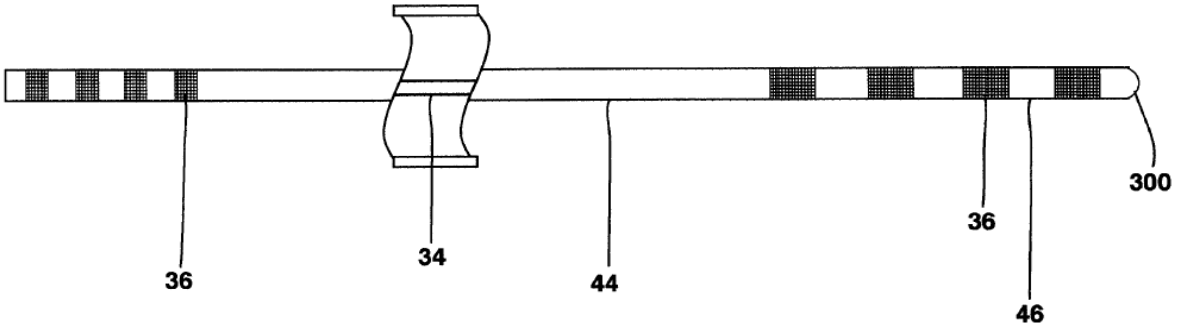

Stolz shows a stimulation lead having a plurality of conductive contacts (e.g., electrodes) 36 with spacers 46 disposed in between. Ex. 1005, [0025]-[0027]; Ex. 1003, ¶¶71-88.

The distal end of the lead described in the ’747 patent is shown in FIG. 3A below:

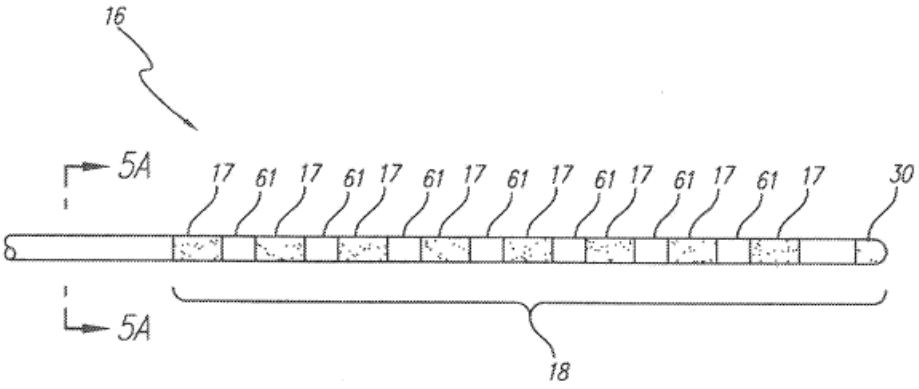

FIG. 3A

Ex. 1001, FIG. 3A. There is no material difference between the ’747 patent’s claimed lead and Stolz’s lead vis-à-vis the lead body and the conductive contacts.

Stolz also has a similar arrangement for running its conductor wires in conductor lumens that run along the length of the lead body for attachment to the plurality of conductive contacts. Stolz’s FIG. 5 is exemplary:

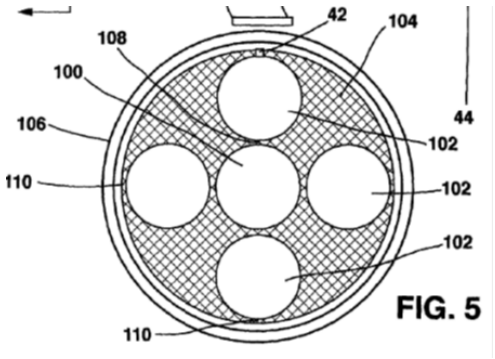

In Stolz’s arrangement, a plurality of conductor lumens 102 are arranged around a central stylet lumen 100, just like the ’747 patent. Ex. 1005, [0028]-[0030]. And like the ’747 patent, Stolz’s conductors run through the plurality of conductor lumens to a point where they attach to their corresponding conductive

contacts. *Id.* Stolz thus unambiguously fills the gap that the patentee alleged was missing from Black[4] during prosecution—i.e., a plurality of conductor lumens running through the lead body through which the conductors pass to reach their corresponding contacts or electrodes.

The structural arrangement of Stolz's conductors and conductor lumens are thus not materially different from the arrangement required by the '747 patent. This is readily seen by comparing the '747 patent's FIG. 5A with Stolz's FIG 5 above.

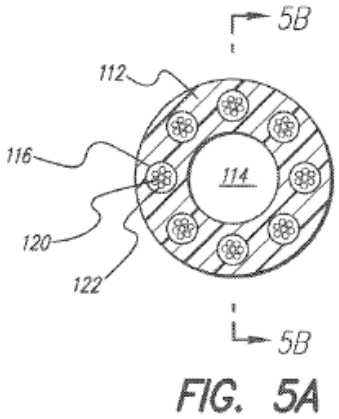

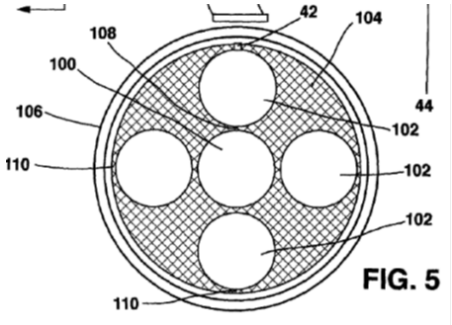

'747 patent **Stolz**

Ex. 1001, FIG. 5A. *See also* Ex. 1003, ¶¶76.

---

[4] Black has a similar configuration, but in Black's arrangement (see FIG. 3 above), there is a single, torus-shaped conductor lumen between the outer tubing 22,23 and the inner stylet tubing 24 within which the conductors 20 are disposed.

Stolz also discloses a plurality of conductor wires disposed in the conductor lumens, as set forth in independent claim 1. Ex. 1005, [0026], [0028]–[0031], [0034], [0045], [0049], [0058], FIGS. 1–15. Specifically, Stolz discloses conductors 34 in the form of conductor wires "contained in the conductor lumens 102 extending from the lead proximal end 38 to the distal end 40." *Id.*, [0031], FIGS. 4, 5, 13. The conductors 34 can be wires. *Id*., [0026], [0034]. Stolz teaches that the conductors 34 can be manufactured from a wide range of materials that are electrically conductive, such as MP35N, platinum, and the like, as in the '747 patent. *Id.*, [0026].

Thus Stolz discloses disposing a plurality of conductor wires in a plurality of conductor lumens formed in the lead body. *See* Ex. 1003, ¶¶82, 119-120.

* * *

With the structural overview set forth above as an introduction, Nevro will demonstrate in detail in Section VI.A., below, that there is no material difference between the basic structure of the stimulation lead required by the '747 patent and the stimulation leads described by at least Stolz. Nevro now turns to the specific features of disposing non-conductive material, radially underneath the contacts, to fill an unoccupied portion of at least one of the conductor lumens, and wherein the non-conductive material is thermally fused with the lead body – in part by heating

the lead assembly at a temperature to cause the non-conductive material to thermally reflow or melt.

2. Disposing solid, non-conductive material radially underneath the conductive contacts and filling unoccupied portions of the conductor lumens would have been obvious by January 2005.

Claim 1's final elements [d] and [e] are reproduced below:

> [d] a solid, non-conductive material disposed, at least in part, radially underneath the conductive contacts and filling the unoccupied portion of at least one of the conductor lumens; …
>
> [e] wherein the non-conductive material is thermally fused with the lead body from heat applied to the lead assembly, which heat is at a temperature to cause the non-conductive material to thermally reflow or melt.

Ex. 1001, 8:39-46.

Stolz discloses most of what is recited in these two features. Ex. 1003, ¶¶72-88, 133-165. Specifically, Stolz discloses heating a solid distal tip on the end of its lead, and reflowing non-conductive material (e.g., silicone rubber, polyurethane, fluoropolymers) from the distal tip into an unoccupied portion of the conductor lumen. Ex. 1005, [0035], [0036]; Ex. 1003, ¶¶ 80-81, 133-139. A similar method may be used to form a proximal flare on the proximal end of its lead. Ex. 1005, [0032], [0033]; Ex. 1003, ¶ 69, 80, 86-88, 159. Further, Stolz discloses that the isolation space 506, which is directly beneath each conductive contact, can include

a "fill material," such as epoxy. Ex. 1005, [0046], *see also* FIG. 13. In Stolz, the material from the distal tip may not flow very far into the conductor lumens. Ex. 1003, ¶¶81, 109, 138. Stolz thus results in a stimulation lead where a substantial portion of at least some of its conductor lumens may be empty—especially for the conductor lumens that service the electrodes furthest from the distal end. *Id.* But to the extent that claim 1 requires "filling" the unoccupied portion of a conductor lumen, Ormsby and Black fill that gap.

Ormsby (Ex. 1006) provides the motivation to fill the portion of Stolz's conductor lumens that are not occupied by its conductive wires. Ex. 1003, ¶¶89-93. Specifically, Ormsby teaches that it is desirable to fill lumen spaces to prevent kinking or crushing, if stressed. *See e.g.*, Ex. 1006, 7:3-10; Ex. 1007; *see also* Ex. 1003 ¶¶91-93, 140-150. Ormsby also teaches various methods for filling a lumen, including with powder, liquid adhesive, epoxy, or resin. Ex. 1003, ¶¶143-145. For these reasons, a POSA would have been motivated to modify Stolz to fill the unoccupied portions of its conductor lumens. Ex. 1003, ¶¶89-96, 133-150. A POSA would have also recognized that there are a finite and limited number of ways to fill a conductor lumen. Ex. 1003, ¶150. Accordingly, a POSA and would have at least been motivated to try filling the space with one of powder and subsequently reflowing the same, liquid adhesive, epoxy, or resin, as taught by Ormsby. *See* Ex. 1003, ¶ 150.

Moreover, Black discloses the technique of heating, then reflowing solid, non-conductive lead elements, like a spacer, to fill lumen spaces. Ex. 1003, ¶¶97-104, 151-156. For example, Black discloses that "electrode spacers 28 and terminal spacers 30 are placed in a state of flow, which, at least in part, results in a *filling* of regions between terminals 16/electrodes 18 and stylet guide 24"—i.e., unoccupied portions or spaces in the conductor lumen. Ex. 1008, 7:1-15 (emphasis added). Black further discloses "an isodiametric lead is obtained, which is further free of any gaps or spaces between the insulative material and conductive material that may otherwise exist in conventional devices,"—i.e., Black teaches complete filling of its conductor lumen space. Ex 1008, 7:29-33. The Examiner during prosecution did not appear to recognize the significance of Black's technique for filling spaces in the conductor lumen by heating and reflowing a spacer because the Examiner relied on another reference for this teaching. *See e.g.*, Ex. 1002 at 0062, Office Action dated July 15, 2013, p. 6. Nevro thus uses Black in a way that is different from the prosecution below.

Black's previously unappreciated technique of heating its solid, non-conductive spacers so that they reflow into the space in the conductor lumen is directly applicable to Stolz in view of Ormsby's motivation to fill empty lumen spaces. And a POSA would have been expected to succeed in executing these

steps. Ex. 1003, ¶105-114, 151-164. Indeed, Stolz, Ormsby and Black all indicate that the applicable techniques were well-known in the art.

Independent claim 11 is nearly identical, substantively, to independent claim 1. It is broader and includes slightly different phrasing, which are addressed, *infra* at Section VI.K.

* * *

This summary of Nevro's unpatentability position for independent claim 1 of the '747 patent provides context, background, and motivation for the detailed mapping of the prior art to all of the claims in the '747 patent.

VI. Ground 1: The combination of Stolz, Ormsby, and Black renders obvious claims 1-19 of the '747 patent.

A. Independent claim 1

1. "A stimulation lead assembly for making a lead, the assembly comprising:"

Stolz describes a stimulation lead 30. It characterizes that lead as "[a]n implantable lead [comprising] a lead body 32… [with] a proximal end 38 [and] a distal end 40." Ex. 1005, [0025], FIG. 3. Stolz discloses that its lead may be part of an "implantable neurological stimulation system that can be used to treat conditions such as pain, movement disorders, pelvic floor disorders, gastroparesis, and a wide variety of other medical conditions." *Id.*, [0003], FIG. 3. Stolz provides some examples of prior devices and teaches that "[t]he implantable lead 30 can be

configured as a neurological stimulation lead, a neurological sensing lead, and a combination of both as a neurological stimulation and sensing lead, a cardiac lead, and the like." *Id.*, [0024].

Thus, Stolz discloses a stimulation lead assembly for making a lead. *See* Ex. 1003, ¶¶115-118.

2. "a lead body defining a central lumen extending along the lead body and a plurality of conductor lumens disposed circumferentially around the central lumen and extending along the lead body;"

Stolz also shows a substantially cylindrical lead body with a central lumen and a plurality of conductor lumens. *See, e.g.*, Ex. 1005 at FIG. 12; *see also* Ex. 1003, ¶119. The conductor lumens 102 are shown within the substantially cylindrical body and disposed circumferentially around a central lumen (stylet lumen 100), and extend along the lead body as shown, e.g., in Stolz's Figure 4. Ex. 1003, ¶119. Specifically, Stolz states that "FIG. 4 shows an implantable lead embodiment, and FIG. 5 shows a cross section of the implantable lead in FIG. 4. An implantable lead with improved conductor lumens comprises a lead body 32, a stylet lumen 100, at least one conductor lumen 102, and at least one axial slit 42." Ex. 1005, [0028]. Figures 4 and 5 of Stolz are shown below for convenience:

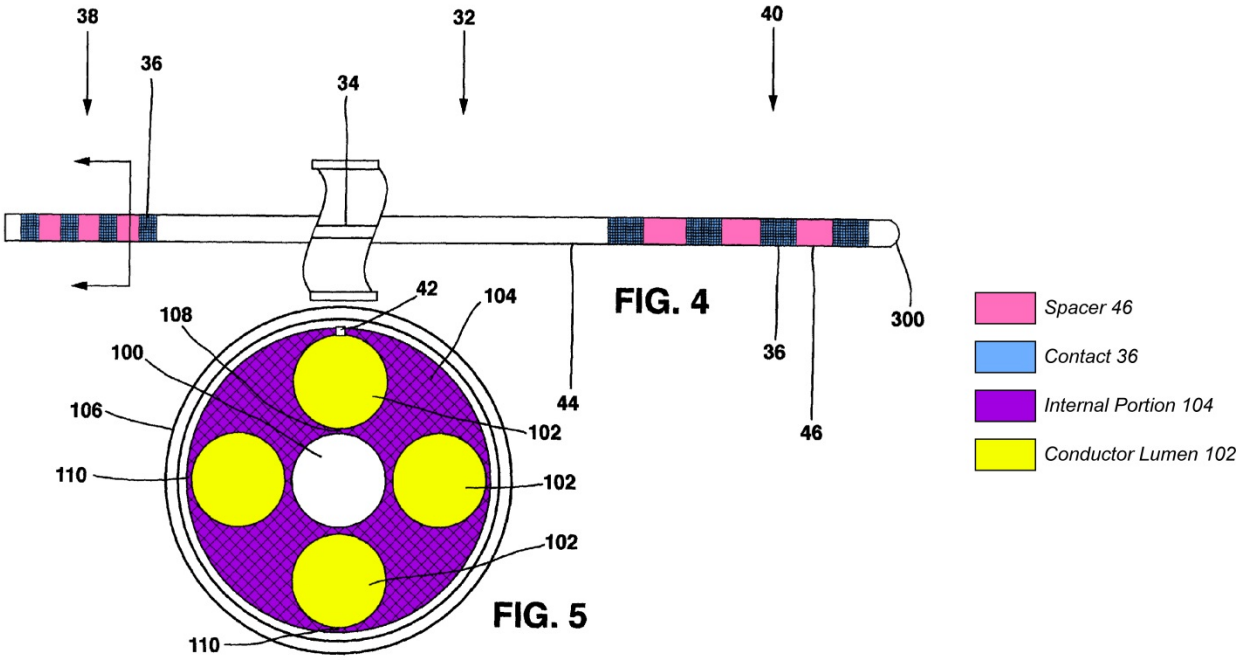

Thus, Stolz unambiguously discloses a lead body 32 defining a central lumen 100 extending along the lead body and a plurality of conductor lumens 102 disposed circumferentially around the central lumen and extending along the lead body. Ex. 1003, ¶¶¶120-121.

3. "a plurality of electrically conductive contacts disposed along an end of the lead body, wherein a portion of each of the conductor lumens is disposed radially underneath the conductive contacts,"

Stolz provides conductive contacts at an end of the lead body. Ex. 1005, [0039], [0041], *see also* FIGS. 3, 12, and 13. In one embodiment, Stolz provides "at least two contacts 36" where the contacts include "at least one contact 36 carried on the lead distal end 40…and at least one contact 36 carried on the proximal end 38." *Id.*, [0027], [0039], [0054]; *see also* FIGS. 3, 12, and 13. Stolz further discloses that "[i]mplantable leads have conductors that are connected to

contacts to form electrical paths." *Id.*, [0004]. Moreover, Stolz discloses that "[t]he connection between the conductors and the contacts should have a solid mechanical connection and a low impedance electrical connection for efficient operation and reliability." *Id*. Stolz's FIGs. 4 and 5 are reproduced below for convenience, showing four contacts 36 on each of the proximal 38 and distal 40 end of lead body 32. FIG. 5 shows a cross section of the implantable lead in FIG. 4.

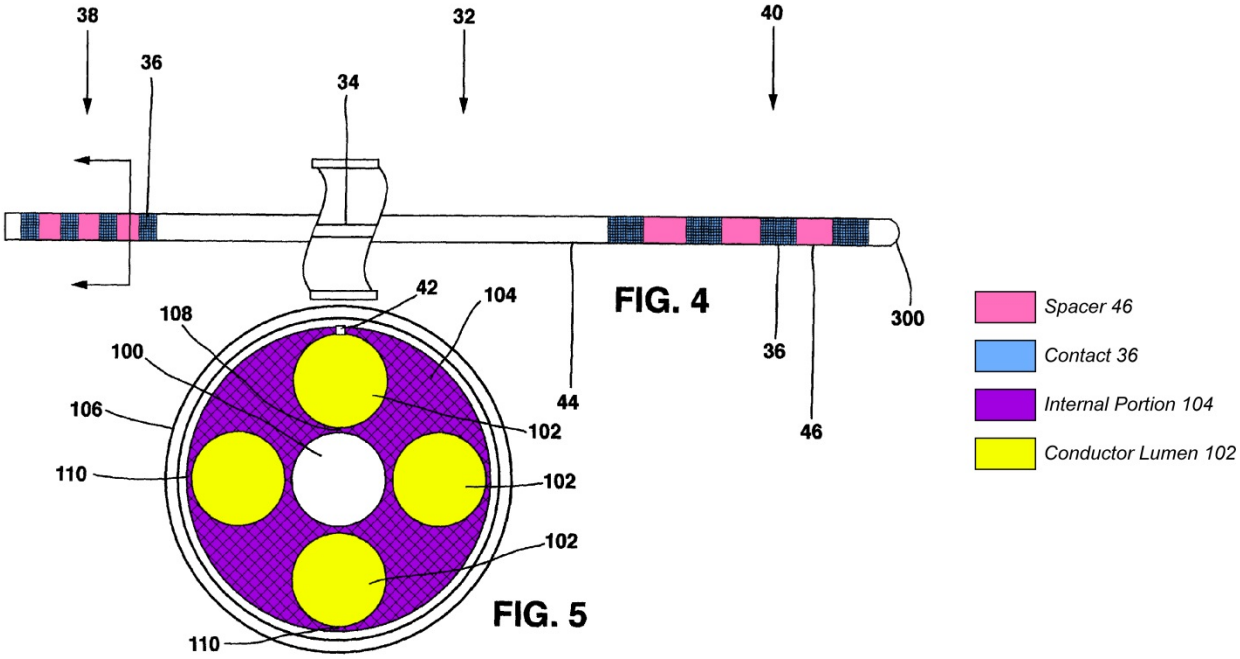

As illustrated, Stolz's conductor lumens 102 are formed in the internal portion 104 and positioned near an outer surface of the internal portion 104, with a web 110 between the conductor lumen 102 and the outer surface of internal portion 104. *Id.*, [0029]. As such, the conductor lumens 102 are disposed radially

underneath their respective conductive contacts (on the outer surface of the lead). *See also* Ex. 1005, FIGS. 6–9.

Annotated figure 13 of Stolz unambiguously shows a conductor (orange) that is disposed radially underneath the conductive contact (blue):

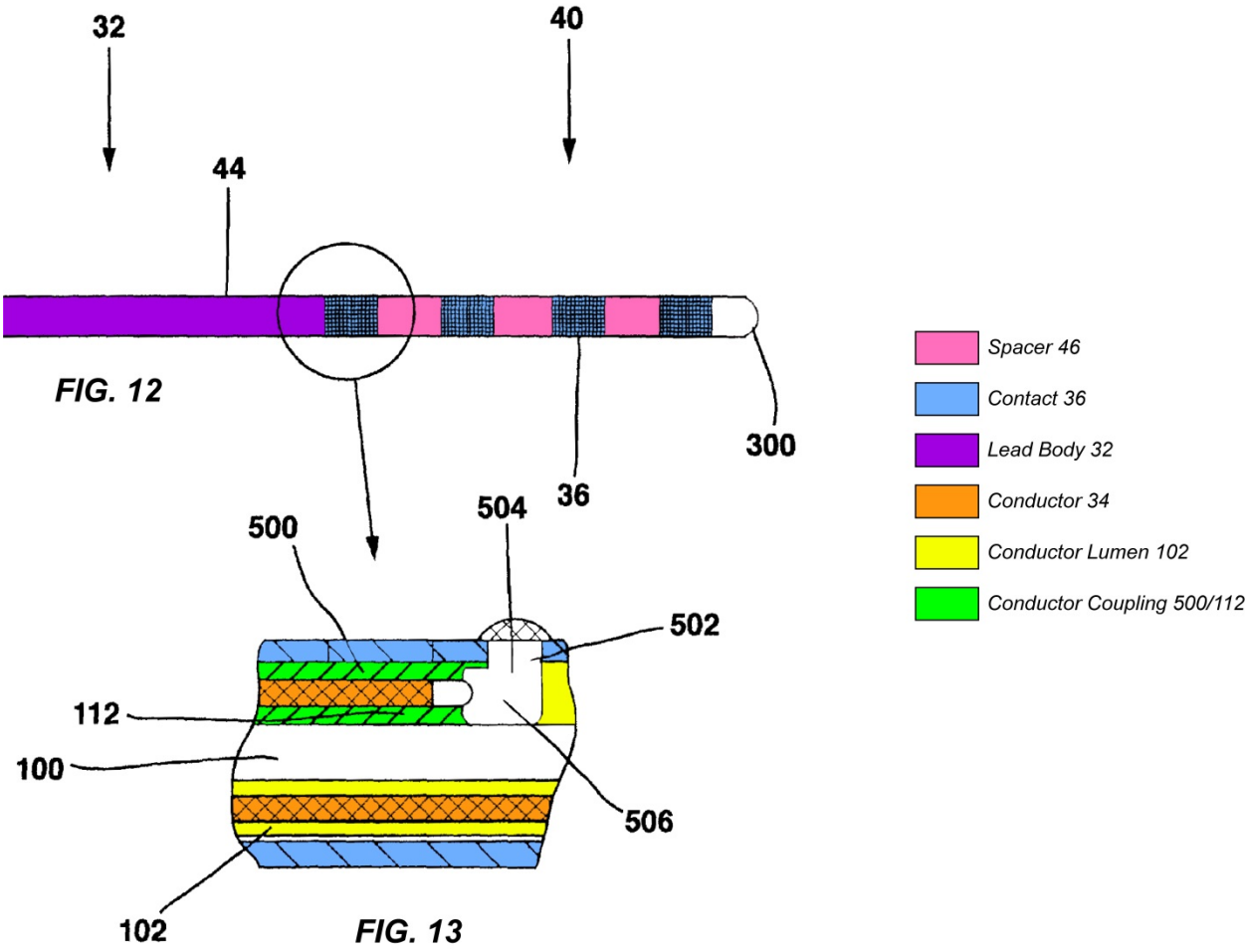

Figure 13 shows a second conductor (orange) at the bottom that extends to the next conductive contact (*e.g.*, distal end electrode) as one moves towards the distal tip 300. Ex. 1003, ¶126. It is also clear that the conductor lumens 102 (yellow) are disposed radially underneath their respective conductive contacts (blue), on the

outer surface of the lead. *See also* Ex. 1005, FIGS. 6-9, [0028] ("The stylet lumen 100 and conductor lumen 102 are formed in the internal portion 104. The internal portion 104 is a continuous material that has a proximal end 38 and a distal end 40…. This structure can be extruded and its configuration can be substantially the same at any longitudinal cross section.").

Thus, Stolz discloses a plurality of electrically conductive contacts disposed along an end of the lead body, wherein a portion of each of the conductor lumens is disposed radially underneath the conductive contacts. *See* Ex. 1003, ¶¶122-127.

4. "a plurality of conductor wires disposed in the conductor lumens, wherein at least one of the conductor wires is electrically connected to each conductive contact, wherein each conductor lumen comprises an occupied portion within which at least one of the conductor wires is disposed and an unoccupied portion in which none of the conductor wires is disposed, the unoccupied portion extending from an end of the conductor lumen; and"

Stolz discloses the plurality of conductor wires disposed in conductor lumens, and electrically connecting the conductor wires to the each of the conductive contacts Ex. 1005, [0026], [0028]–[0031], [0034], [0045], [0049], [0058], FIGS. 1–15. Stolz's figure 13, annotated below, shows the conductor 34 (orange) coupled to the electrical contact 36 (blue) via electrical coupling 112 in the conductor to conductor coupling 500/112 (green):

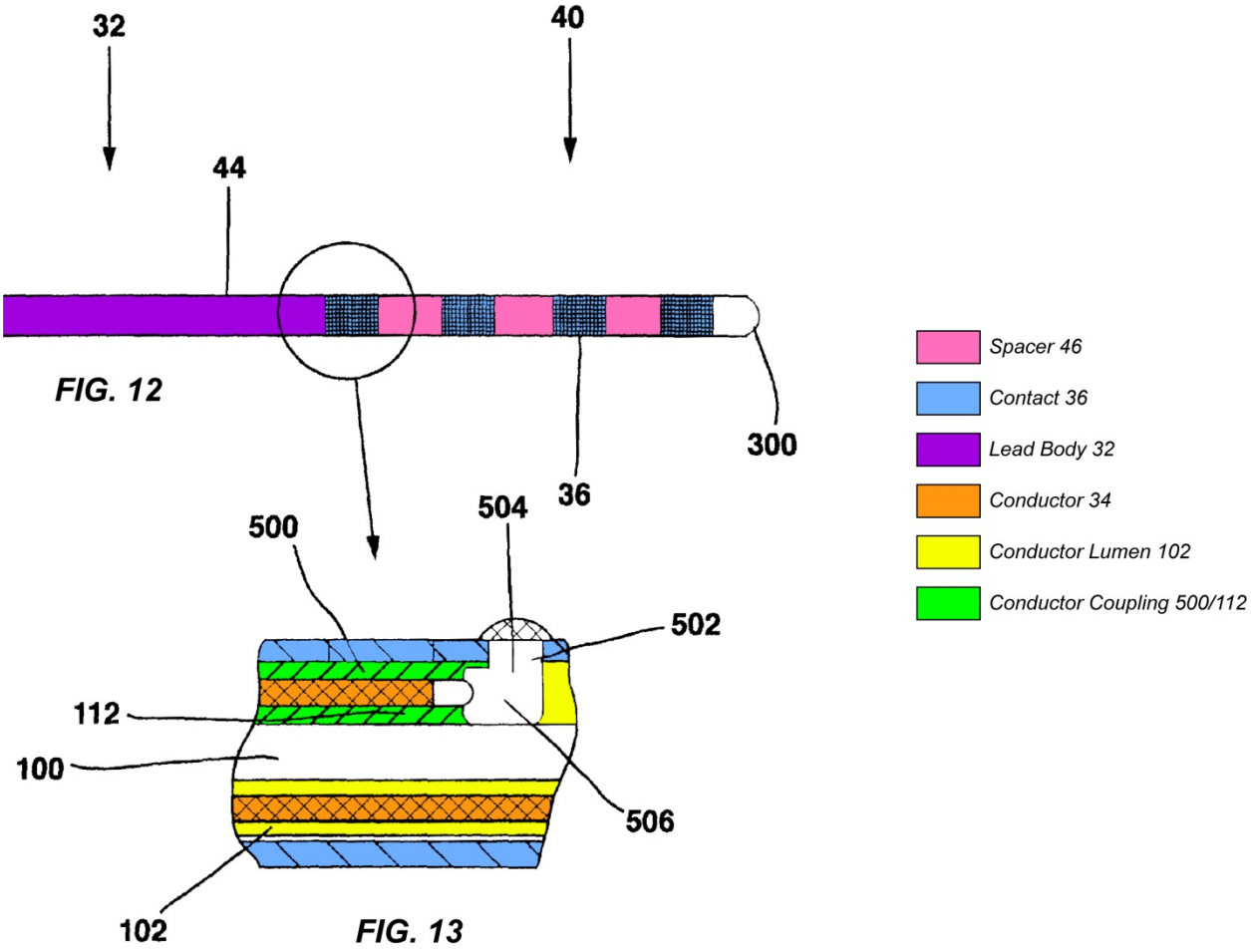

Stolz explains that "[t]he coupling 112 has a conductor coupling 500 and a contact coupling 502." Ex. 1005, [0045]. The conductor coupling 500 is made from "a material with good mechanical and electrical properties such as MP35N and the like." *Id.* The "coupling 112 is attached … to a conductor 34 so that the conductor 34 extends into a first coupling region 500 of the coupling 112." *Id.*, [0048]. "The first coupling region 500 is mechanically attached to the conductor 34 in a crimping process that … engages the conductor 34 firmly." *Id.* [0049]. Then, Stolz teaches that "[t]he coupling 112 attached to the conductor 34 is exited

through the axial slit 42 in the lead body distal end … [which] permits the coupling 112 to pass through to mate to the contact 36 with the minimum amount of movement of the conductor 34 assembly within the lead body." *Id.*, [0051]. Thus, Stolz discloses connecting the conductor wires to the conductive contacts. *See* Ex. 1003, ¶¶128-131. Black also discloses this feature. *See* Ex. 1008, 5:29-39, 6:56-65.

Claim 1 recites the following feature: "wherein at least one of the conductor wires is electrically connected to each conductive contact." In a concurrent patent infringement suit in Delaware, the patent owner BSNC is construing this feature as "at least one of a plurality of conductor wires disposed in the conductor lumens electrically connected to one conductive contact, such that the conductive contacts are connected to the plurality of conductor wires."[5] For purposes of this proceeding, Nevro does not dispute that BSNC's proposed construction under the narrower *Phillips* standard applicable to the district court action also falls within the broader BRI standard that the Board must apply in this proceeding.[6] Under

---

[5] *See* C.A. No. 16-1163 (GMS) Defendant Nevro Corp.'s Opening Claim Construction Brief, filed on October 13, 2017.

[6] BSNC's construction is broader than the construction Nevro has proposed in the district court, where Nevro is advocating a plain reading of the connecting clause under the standard set forth in *Phillips v. AWH Corp.*, 415 F.3d 1303 (Fed.

BSNC's broad construction, this step would be met by a process that connects each conductive contact to at least one of the plurality of conductor wires. This step is met by at least Stolz.

In the embodiment shown in Stolz's figures, there are four distal end electrodes, four conductor lumens, and four proximal end contacts. Ex. 1003, ¶ 128; *see also* Ex. 1005, Figures 4, 5. Stolz thus naturally discloses connecting four conductor wires to their respective conductive contacts in a one-conductor-wire-to-one-conductive-contact configuration. Ex. 1005, [0026], [0028]–[0031], [0034], [0045], [0049], [0058], FIGS. 1–15. Specifically, Stolz discloses that "the conductor lumens 102 electrically insulate each conductor 34 and physically separate each conductors 34 to facilitate identification of the conductor 34 that is appropriate for its single corresponding contact 36." Ex. 1005, [0029].

Cir. 2005). Under Nevro's narrower construction, the connecting clause requires at least one single conductor that is connected to each of the plurality of conductive contacts. This narrower configuration, too, was known in the prior art. *See, e.g.*, Schallhorn, Ex. 1016, 3:17-4:9, 5:63-6:12, 8:13-33, FIGS. 1, 2, 6, 14-15. Nevro's narrower, *Phillips*, construction also falls within the scope of the broadest reasonable interpretation.

Finally, Stolz teaches each conductor lumen comprises an "occupied portion"—that is, the portion within which at least one of the conductor wires is disposed—and an "unoccupied portion," simply in which none of the conductor wires is disposed. This unoccupied portion extends from where the conductor ends at the connection to its respective contact. *See, e.g.*, annotated FIG. 13, *supra*; *see also* Ex. 1003, ¶ 132.

5. "a solid, non-conductive material disposed, at least in part, radially underneath the conductive contacts and filling the unoccupied portion of at least one of the conductor lumens,"

Stolz further discloses solid, non-conductive disposed in a conductor lumen 102, e.g., to seal it. Ex. 1005, [0025], [0032], [0035], [0036], [0046]. Stolz thus fills, at least in part, an unoccupied portion of at least one of the conductor lumens. In the described embodiment, "the formed distal tip 300 seals the conductor lumens 102 free from adhesive or solvents." *Id.*, [0035]. This is accomplished when "[t]he heat conducted from the mold to the lead distal tip 300 melts the surrounding material into the conductor lumen 102 and into the stylet lumen 100, completely sealing them from the outside." *Id.*, [0036]. The solid distal tip 300 thus "penetrates the lumens 100, 102 of the lead body… [and] reaches no further into the lumens than making contact to the enclosed conductors." *Id.*, [0035]. This material may be a wide range of electrically isolative—i.e., non-conductive—materials and configurations such as silicone rubber, polyurethane, fluoropolymers

and the like. *Id.* [0025], [0032], [0035]. Stolz's figures 8 and 9 (below) are illustrative of the location of the distal tip 300 relative to the stylet lumen 100, and conductor lumens 102. *See* Ex. 1003, ¶¶ 133-135

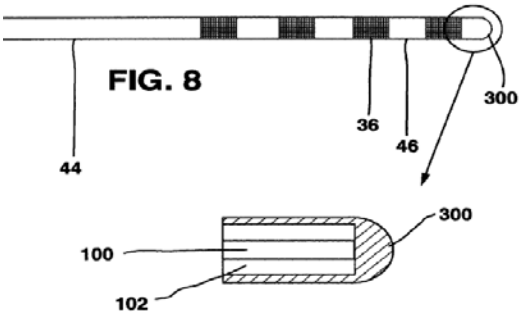

FIG. 9

Further, Stolz discloses that the isolation space 506 can include a "fill material" (such as epoxy)—which a POSA would have understood to be non-conductive—further filling an unoccupied portion of the conductor lumen that is radially underneath the conductive contacts. *Id.* [0046]. Stolz's FIG. 13 show the isolation space 506 is radially underneath Stolz's conductive contacts.

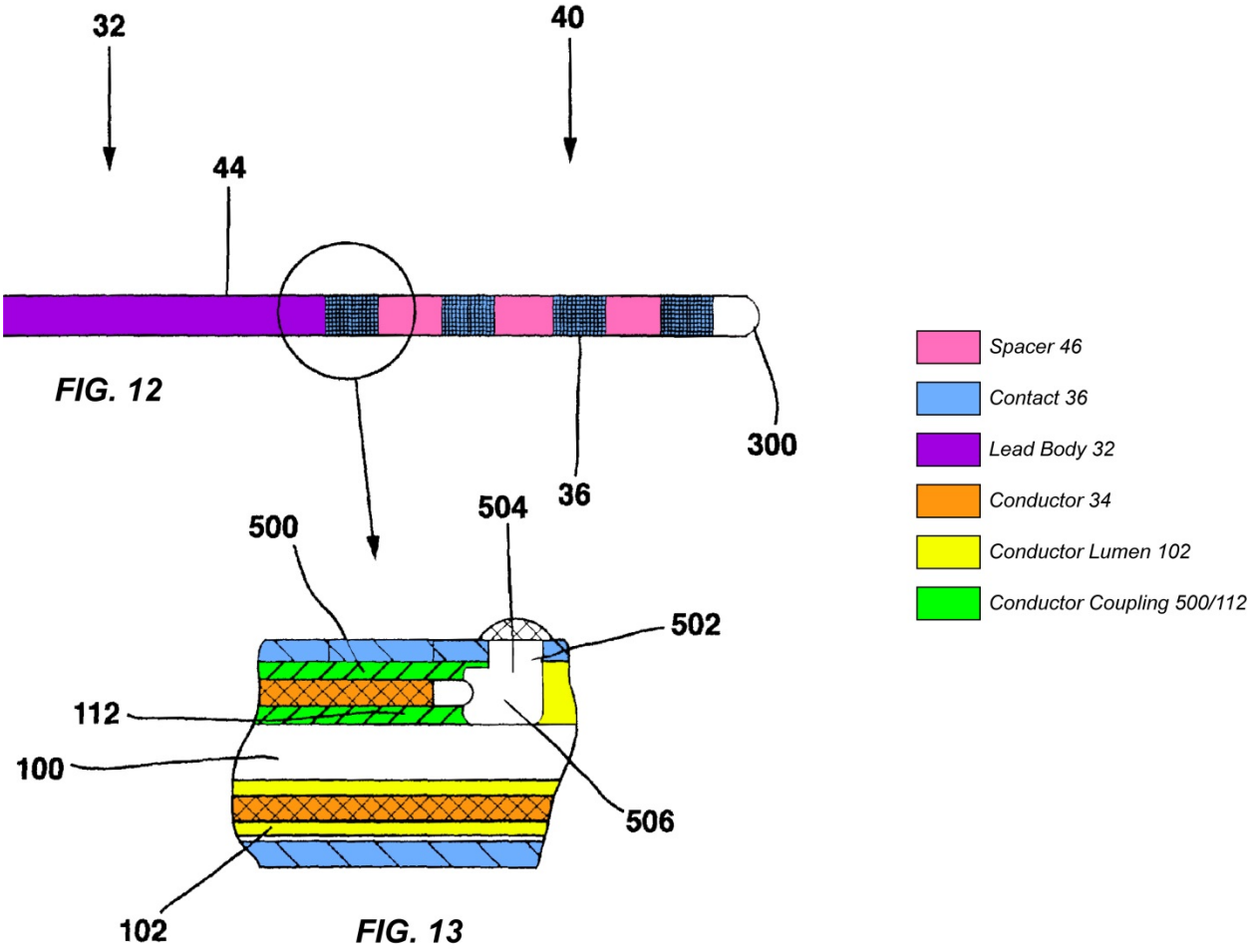

Accordingly, Stolz discloses "a solid, non-conductive material disposed, at least in part, radially underneath the conductive contacts."

However, Stolz's sealing the end of the implantable lead with its distal tip does have some potential disadvantages. Ex. 1003, ¶¶135-138. Specifically, the reflowed portion of Stolz's distal tip may not penetrate very far into the stylet lumen or the conductor lumens. Specifically, Stolz teaches that the distal tip material "penetrates the most distal end of the stylet lumen 100 by about 0.15 cm (0.059 inch) into the stylet lumen 100 of the lead beginning from the most distal

end of the hemi-spherical distal tip 300." Ex. 1005, [0038]. Stolz discloses that the distal tip may make contact with the enclosed conductors *see, e.g., id.*, [0035]. But given the distance that the distal tip material penetrates the stylet lumen, some conductor lumens—e.g., especially those that service electrodes that are furthest from the distal tip—may still have a long, unoccupied space between the distal tip and the conductor. *See* Ex. 1003, ¶139. Further, Stolz's disclosure of filling the isolation space with filling material (e.g., epoxy) similarly may not be sufficient to expressly teach the feature of "filling the unoccupied portion of at least one of the conductor lumens."

By January 2005, however, a POSA would have recognized that leaving long, empty portions of a conductor lumen could be an undesirable condition, depending on the application. Ex. 1003, ¶¶ 139-141. For example, as Nevro's expert explains, a long and empty conductor lumen would be more susceptible to perforation, kinking, or other material damage, such as during insertion into a human body. Further, having empty conductor lumens of varying lengths could cause variations in the flexibility of the implantable lead. *Id.* Finally, empty conductor lumens could increase the chance of separation of components of the lead body from one another. *Id.*

To prevent these potential problems, a POSA would therefore have searched for other known techniques for filling the unoccupied portions of the conductor

lumens. And to do so, a POSA would have thus considered other medical device references to identify suitable methods for filling lumens and other spaces within elongate structures having conductive wires therein. The prior-art Ormsby reference (Ex. 1006) meets that need and confirms Nevro's expert's assertion that a POSA would have been motivated to fill the unoccupied lumen spaces. Ex. 1003, ¶ 140.

Ormsby discloses a catheter with a lumen extending from the proximal end to the distal end. Ex. 1006, Abstract. Ormsby's FIG. 3 is shown below for reference:

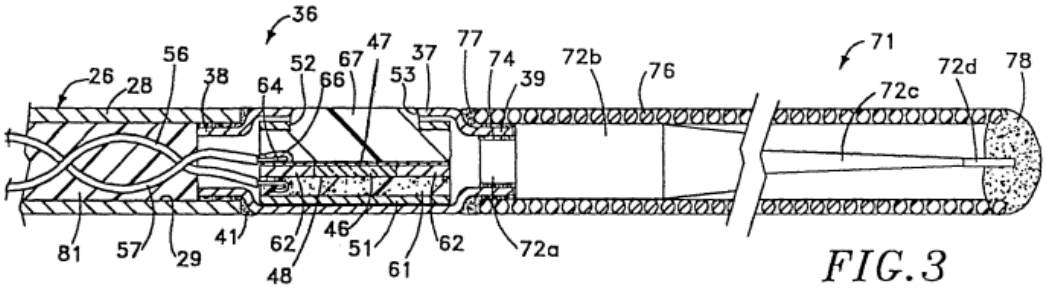

FIG. 3

Conductor members 56 and 57 extend through Ormbsy's conductor lumen from the proximal end to connect to a transducer element at the distal end. *Id.*, 5:10-16, FIG. 3. Ormsby teaches that "[i]n order to substantially increase the kink resistance of the flexible elongate tubular member 26, the lumen 29 therein can be filled with a filler 81 of a suitable material." *Id.*, 7:3-5. This process ensures that material "fills the void within the lumen and greatly reduces the possibility of kinking of the hypotube forming the flexible elongate tubular member." *Id.*, 7:8-

10. Filling the portions of Stolz's conductor lumens not occupied by conductor wires would provide a similar benefit, as taught by Ormsby, of reducing the possibility of kinking in Stolz's lead, while also improving axial stability. *See* Ex. 1003, ¶¶ 139-144.

In addition to using epoxy to fill spaces in the lead body, which the '747 patent itself describes as a "prior method", Ex. 1001, 7:4-10, 56-67, Ormsby discloses inserting other non-conductive materials like liquid epoxy or resin that then hardens, or a polymer powder that may be melt formed or reflowed inside the lead body to form a non-powder solid polymer. Ex. 1006, 7:3-10; *see also*, Ex. 1003, ¶ 144. These methods increase "kink resistance." Ex. 1006, 7:3-10; *see also*, Ex. 1003, ¶¶ 144-150. They also facilitate formation of an isodiametric lead, which Stolz itself teaches is beneficial. Ex. 1003, ¶ 79, 81, 144, 150.

Black also discloses filling the unoccupied portion of a conductor lumen and it provides a different technique for doing so. Figure 3 illustrates Black's conductor lumen:

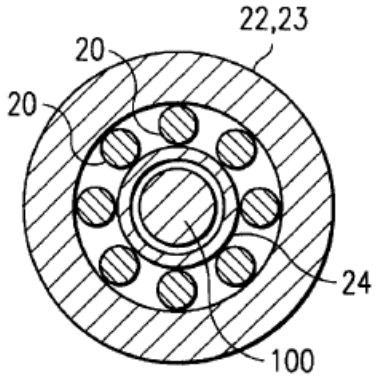

FIG. 3

The conductors 20 are disposed around a center stylet 100, and stylet tubing 24. Ex. 1008, 5:28-45, 6:5-10, 7:12-23. The conductor lumen is the cylindrical (toriodal- or donut-shaped) space between the stylet tubing 24 and the outer tubing 22, 23 in which the conductors 20 are disposed. There are spaces between the conductors at this stage of manufacture.

Black discloses the technique of heating, then reflowing non-conductive lead elements, like its spacers, to fill its lumen space. *See id.*; *see also* Ex. 1003, ¶¶ 151-156. Specifically, Black discloses that "electrode spacers 28 and terminal spacers 30 are placed in a state of flow, which, at least in part, results in a *filling* of regions between terminals 16/electrodes 18 and stylet guide 24"—i.e., unoccupied portions or spaces in the conductor lumen. Ex. 1008, 7:13-16 (emphasis added). Black further discloses "an isodiametric lead is obtained, which is further free of any gaps or spaces between insulative material and conductive material that may

otherwise exist in conventional devices,"—i.e., Black teaches complete filling of its conductor lumen space. *Id.* at 7:29-33. As described above, Black uses spacers 28 that are disposed between electrodes 18.

Black's Figures 5 (lead) and 7 (spacer) are illustrative:

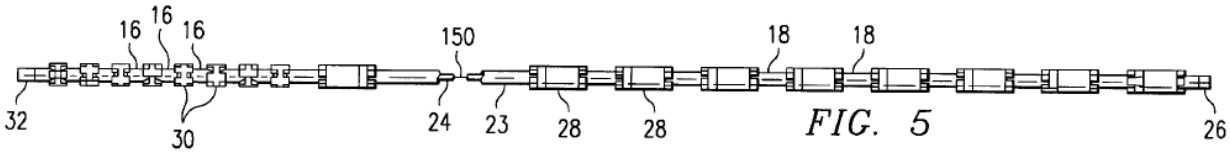

FIG. 5

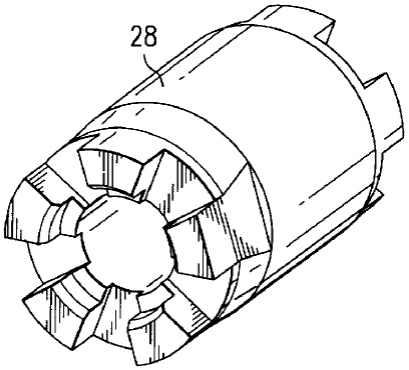

FIG. 7

Finally, a POSA would have recognized that there are a limited number of ways to fill a lumen. *See* Ex. 1003, ¶155. A POSA thus would have found it at least obvious to try and fill the lumen with a non-powder, solid material, as Ormsby describes, or to fill the lumen with reflowed, non-conductive spacer material, as Black describes, to determine the best of a limited number of options. *Id.* A POSA would have appreciated that these types of filling were available solutions in related arts. Ex. 1003, ¶156.

* * *

For the reasons explained above, a POSA would have found it obvious to at least try various techniques to fill the spaces in Stolz's conductor lumens that are unoccupied by the conductor wire to enhance the reliability of Stolz's stimulation lead. Ex. 1003, ¶156. Ormsby and Black confirm this. *Id.* Thus Stolz's stimulation lead, as modified by the above teachings of Ormsby, would disclose the stimulation lead assembly for a lead that includes all of the elements as arranged in the claims of the '747 patent. *See* Ex. 1003, ¶¶156.

6. "wherein the non-conductive material is thermally fused with the lead body from heat applied to the lead assembly, which heat is at a temperature to cause the non-conductive material to thermally reflow or melt."

Finally, the'747 patent includes the feature that the non-conductive material is thermally fused with the lead body from heat applied to the lead assembly, which heat is at a temperature to cause the non-conductive material to thermally reflow. During prosecution, the Examiner applied no weight to this feature, believing this element was akin to a product-by-process element. This is legally sound, at least because, "even though product-by-process claims are limited by and defined by the process, determination of patentability is based on the product itself…. If the product in a product-by-process claim is the same as or obvious from a product of the prior art, the claim is unpatentable even though the prior product was made by a different process." *In re Thorpe*, 777 F.2d 695, 697, (Fed.

Cir. 1985) (citations omitted). Nonetheless, Stolz as modified below discloses and renders these features obvious.

Specifically, Stolz discloses thermally fusing at least the distal tip and proximal flare by reflowing material into at least one of the conductor lumens not occupied by the conductive wires by applying heat to cause thermal reflow. Ex. 1005, [0035], [0036], [0046]. Ormsby discloses inserting other non-conductive materials like liquid epoxy or resin that then hardens, or a polymer powder that may be melt formed or reflowed therein to form a non-powder solid polymer. Ex. 1006, 7:3-10; *see also*, Ex. 1003, ¶¶153-159. These methods increase "kink resistance." Ex. 1006, 7:3-10; *see also*, Ex. 1003, ¶153-159. They also facilitate formation of an isodiametric lead, which Stolz itself teaches is beneficial. Ex. 1003, ¶ 153-159. And the prior-art Black patent further emphasizes this feature, along with complete filling of the lumens and portions radially beneath the contacts with reflowed, non-conductive spacer material. *See* Ex. 1008 at 6:19-34, 7:5-23, 7:29-34; FIG. 5; . *See* Ex. 1008, 6:19-34, 7:5-23, 7:29-34, FIG. 5; *see also* Ex. 1003, ¶¶157-159.

As described in detail above, Black discloses reflowing its spacers into the conductor lumen spaces to stabilize and strengthen the structural elements therein within "a fused matrix of material" that is "free of gaps and spaces." *See* Ex. 1008, 6:19-34, 7:11-24, 7:29-34, FIG. 5; *see also* Ex. 1003, ¶¶160-161. This disclosure

renders obvious the feature of non-conductive material being thermally fused with the lead body from heat applied to the lead assembly, which heat is at a temperature to cause the non-conductive material to thermally reflow or melt. Ex. 1003, ¶161-164.

It would have thus been within the skill of a POSA to apply to Stolz the technique taught in Black of reflowing spacers to fill spaces in the conductor lumen to achieve the desired benefits, as taught by Ormsby and Black, of filling spaces in the conductor lumen. *See* Ex. 1003, ¶¶163-165.

* * *

For the reasons explained above, a POSA would have been motivated to take advantage of this type of thermal processing of the spacers of Black in combination with Stolz's method of forming the distal tip (and proximal flare, as well). Both processes operate based on the same principles of material joining by applying heat. For the same reasons, a POSA would have appreciated that the method would be successful. *See*, Ex. 1003, ¶165.

CONCLUSION FOR CLAIM 1

Stolz's stimulation lead 30, as modified by the teachings of Ormsby and Black, and as explained and confirmed by Nevro's expert, discloses and renders obvious the stimulation lead assembly for making a lead assembly that includes all

of the elements as arranged in independent claim 1 of the ’747 patent *See generally*, Ex. 1003, ¶165.

B. Claim 2

1. “The lead assembly of claim 1,”

As discussed above, the combination of Stolz, Ormsby, and Black disclose and render obvious this limitation.

2. “comprising a plurality of spacers disposed between adjacent pairs of the conductive contacts.”

Stolz discloses spacers disposed between pairs of adjacent conductive contacts. Ex. 1005, [0027], FIGS. 3, 4, 6, 7, 10, 12, 13. Specifically, Stolz discloses that “spacers 46 are inserted between contacts 36.” *Id.*, [0027]; *see also* FIGS. 3, 4, 6, 8, 10, 12, 13. Stolz’s figure 3 below is illustrative.

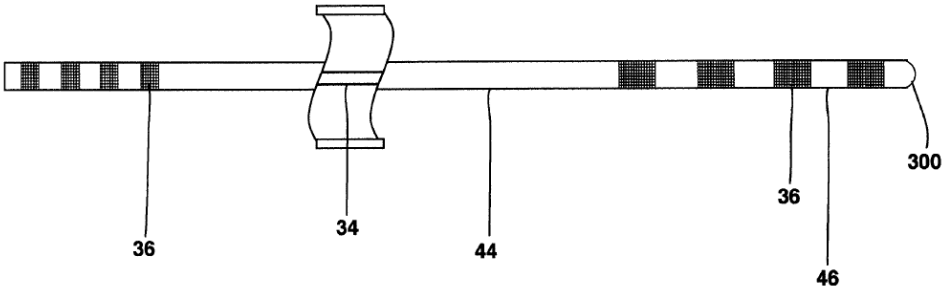

FIG. 3

Thus Stolz discloses placing spacers between pairs of adjacent conductive contacts. *See* Ex. 1003, ¶¶134-135. Black also discloses the feature of placing

spacers between pairs of adjacent conductive contacts. *See* Ex. 1008, FIG. 5, 7, and 6:19-36; *see also* Ex. 1003, ¶¶ 166-167.

C. Claim 3

1. "The lead assembly of claim 2,"

As discussed above, the combination of Stolz, Ormsby, and Black disclose and render obvious this limitation.

2. "wherein the spacers and the non-conductive material arc [sic] thermally fused together from heat applied to the lead assembly"

This feature would have been obvious to a POSA in view of the material filling options described above. Ex. 1003, ¶¶168-169. Specifically, Black's spacers, as reflowed above with heat applied to the lead assembly, would become thermally fused together with the material in Stolz (e.g., the distal tip, proximal flare, or fill material in the isolation space). *Id. See also supra* Sections VI.A.5 and VI.A.6. Black specifically describes the process as creating a "fused matrix of material" that stabilize and strengthen the lead's terminals and electrodes, "while also retaining their flexible properties." Ex. 1008 at 7:13-24. This is possible because Black teaches that its spacers are formed of a material mechanically equivalent to the other components such as the body of the lead. *Id.* Ormbsy teaches similar concepts. Ex. 1003, ¶¶169-172. *See also supra* Sections VI.A.5 and VI.A.6. So as applied to Stolz, any material that is used to fill the isolation space

below Stolz's electrodes, like a plastic fill, would be fused into a matrix with the surrounding lead body, as taught by Black.

As such, the combination of Stolz, Ormsby, and Black, as described in the prior art, disclose and render obvious the feature of thermally fusing the non-conductive elements, such as Stolz's spacers, with the lead body and any similar non-conductive, fill material. Ex. 1003, ¶ 169-172. *See also supra* Sections VI.A.5 and VI.A.6.

D. Claim 4

1. "The lead assembly of claim 3,"

As discussed above, the combination of Stolz, Ormsby, and Black disclose and render obvious this limitation.

2. "wherein a material of the spacers and the non-conductive material are a same material."

This feature would have been obvious to a POSA in view of the material filling options described above. Specifically, the obviousness of material selection, particularly using the same materials for the non-conductive and spacers would have been appreciated by a POSA. Ex. 1003, ¶ 173-177. Doing so would additionally take advantage of Stolz's disclosure that the lead body 32 can be composed of polyurethane, and that other components such as the distal tip and proximal flare may be made of the same material. Ex. 1005, [0035], *see also* Ex. 1003, ¶¶ 173-177. Stolz discloses that selecting the same materials for lead

components would minimize the possibility of separation from the lead body. Ex. 1005, [0025], [0033], and [0036]; *see also* Ex. 1003, ¶ 175.

Black explicitly suggests using materials, including spacers, that are mechanically compatible with the lead body outer tubing 23. Ex. 1003, ¶ 176. For example, Black teaches that "Electrode spacer 28 and/or terminal spacer 30 are preferably formed of the same material as outer tubing 23." Ex. 1008, Black, 6:23-26; *see also* 7:18-23. This makes sense if the materials are to be fused, as Black teaches. Ex. 1003, ¶ 176; Ex. 1008, 7:11-23. Black also discloses that the materials could be different, but that if they are they "must be compatible with and possess largely the same mechanical properties … as outer tubing 23." *Id.* at 6:25-32; 7:18-23. Black goes on to provide exemplary materials. *Id.* at 6:32-36. A POSA would have thus found it obvious to select the same material for both the non-conductive material (as Stolz has been modified above) and the spacers.

E. Claim 5

1. "The lead assembly of claim 3,"

As discussed above, the combination of Stolz, Ormsby, and Black disclose and render obvious this limitation.

2. "wherein a material of the spacers and the non-conductive material are different materials."

This feature would have been obvious to a POSA in view of the material filling options described above. Ex. 1003, ¶¶ 178-181. Specifically, the

obviousness of material selection, particularly differing materials for the non-conductive material and spacers would have been appreciated by a POSA. "Reading a list and selecting a known compound to meet known requirements is no more ingenious than selecting the last piece to put in the last opening in a jig-saw puzzle." *Sinclair & Carroll Co. v. Interchemical Corp.*, 325 U.S. 327, 335 (1945); *see also In re Leshin*, 277 F.2d 197, (C.C.P.A. 1960) (selection of a known plastic to make a container of a type made of plastics prior to the invention was held to be obvious). Thus, as discussed above, a POSA would have appreciated that selecting different materials would allow one to select end physical properties of the device, as well as drive manufacturing processes. Ex. 1003, ¶ 180.

Black provides at least one example of joining dissimilar materials, For example, Black expressly discloses that spacers may be formed of the same material as an outer tubing *or a different material*, as long as they are compatible for a particular application, e.g., non-reactive to the environment of the human body, flexible and durable. Ex. 1008, 6:24-32; 7:18-23; *see also* Ex. 1003, ¶ 180. Black thus shows that it is well within the ambit of a POSA to select materials for the lead, including filler, depending on the desired physical characteristics such as strength, hardness and stiffness. Thus, this feature would have been obvious to a POSA. Ex. 1003, ¶ 181. *See also* discussion of claim 4, *supra*.

F. Claim 6

1. "The lead assembly of claim 1,"

As discussed above, the combination of Stolz, Ormsby, and Black disclose and render obvious this limitation.

2. "wherein the plurality of electrically conductive contacts are located on a proximal end of the stimulation lead."

Stolz discloses a plurality of electrically conductive contacts at both the proximal and distal ends of the lead. For example, Stolz provides "at least two contacts 36" where "the contacts include at least one contact 36 carried on the lead distal end 40…and at least one contact 36 carried on the proximal end 38." Ex. 1005, [0027], [0031], [0034]. Stolz's figure also disclose a plurality of conductive contacts at the proximal and distal ends of the lead. *See, e.g., id.*, FIG. 3. *See also* Ex. 1003, ¶¶ 182-186.

G. Claim 7

1. "The lead assembly of claim 1,"

As discussed above, the combination of Stolz, Ormsby, and Black disclose and render obvious this limitation.

2. "wherein the plurality of electrically conductive contacts are located on a distal end of the stimulation lead."

Stolz discloses a plurality of electrically conductive contacts at both the proximal and distal ends of the lead. For example, Stolz provides "at least two contacts 36" where "the contacts 36 include at least one contact 36 carried on the

lead distal end 40…and at least one contact 36 carried on the proximal end 38." Ex. 1005, [0025], [0027], [0031], [0034]; *see also* Ex. 1003, ¶¶187-190. Stolz's figure also discloses a plurality of conductive contacts at both the distal and proximal ends of the lead. *See, e.g.*, Ex. 1005, FIG. 3; Ex. 1003, ¶¶ 187-190.

H. Claim 8

1. "The lead assembly of claim 1,"

As discussed above, the combination of Stolz, Ormsby, and Black disclose and render obvious this limitation.

2. "wherein the non-conductive material is Polyurethane."

It is well recognized that the selection of a known material based on its suitability for its intended use may support a *prima facie* obviousness determination. *Sinclair & Carroll Co. v. Interchemical Corp.*, 325 U.S. 327 (1945). Put simply, "[r]eading a list and selecting a known compound to meet known requirements is no more ingenious than selecting the last piece to put in the last opening in a jig-saw puzzle." *Id*. at 335; *see also In re* Leshin, 277 F.2d 197 (C.C.P.A. 1960) (selection of a known plastic to make a container of a type made of plastics prior to the invention was held to be obvious) ("The lead body 32 can be composed of a wide variety of electrically isolative materials and configurations. Materials may include, but are not limited to, silicone rubber, *polyurethane*, fluoropolymers and the like.") (emphasis added), *see also* Ex. 1003, ¶¶ 191-196.

Black also discusses full flexibility in specifying materials, and expressly discloses use of "polyurethane material." Ex. 1008, 6:24-42. And Black discusses that its spacers may specifically be polyurethane, and that they may be of the same material (or different material) as Black's lead body. *Id.*, 6:19-42. A POSA generally would have thus appreciated that these types of devices may be fabricated from polyurethane, and a POSA would have thus found it obvious to have selected polyurethane as the material for the non-conductive material. Ex. 1003, ¶¶ 191-196.

I. Claim 9

1. "The lead assembly of claim 1"

As discussed above, the combination of Stolz, Ormsby, and Black disclose and render obvious this limitation.

2. "wherein the plurality of conductor lumens is exactly eight conductor lumens."

As above, Stolz discloses a plurality of conductor lumens 102, in the range from about two to sixteen. Ex. 1005, [0029]. This range includes exactly eight conductor lumens. Thus Stolz discloses the feature of having exactly eight conductor lumens. *See* Ex. 1003, ¶¶197-198.

J. Claim 10

1. "The lead assembly of claim 1,"

As discussed above, the combination of Stolz, Ormsby, and Black disclose and render obvious this limitation.

2. "wherein the non-conductive material fills the unoccupied portion of each of the conductor lumens."

This feature only adds that, instead of *only one* conductor lumen being filled with the non-conductive material, *each* of the conductor lumens is filled in the unoccupied portion. *See supra*, Sections VI.A.5 and VI.A.6.

Specifically, a POSA would have recognized, from Ormsby for instance, that leaving long, empty portions of a conductor lumen could be an undesirable condition, depending on the application. Ex. 1003, ¶¶ 199-203. As Nevro's expert explains, a long and empty conductor lumen would be more susceptible to perforation, kinking, or other material damage, such as during insertion into a human body. Further, having empty conductor lumens of varying lengths could cause variations in the flexibility of the implantable lead. *Id.* Finally, empty conductor lumens could increase the chance of separation of components of the lead body from one another. *Id.*

To prevent these potential problems, a POSA would thus not have stopped at filling only one of Stolz's empty lumen spaces, but would have filled every empty lumen space. Ex. 1003, ¶ 202. And in Stolz, the conductor lumens, as explained in

detail above at Section VI.A., are disposed radially beneath the conductive contacts. Again, as explained above, a POSA would therefore have searched for other known techniques for filling the unoccupied portions of the conductor lumens. And to do so, a POSA would have thus considered other medical device references to identify suitable methods for filling lumens and other spaces within elongate structures having conductive wires therein.

Again, Ormsby and Black meet that need and confirms Nevro's expert's assertion that a POSA would have been motivated to fill the unoccupied lumen spaces, and would have succeeded in doing so. Ex. 1003, ¶¶ 133-165, 200-203.

K. Independent claim 11

Independent claim 11 is nearly identical, substantively, to independent claim 1. It is broader and different in certain aspects, which are explained below.

1. "A stimulation lead assembly for making a lead, the assembly comprising:"

There is no material difference between claim 11's preamble, and claim 1's preamble. *See supra*, Section VI.A.1; *see also* Ex. 1003, ¶¶ 204-205.

2. "a lead body defining a central lumen extending along the lead body and a plurality of conductor lumens disposed circumferentially around the central lumen and extending along the lead body;"

There is no material difference between this feature in claim 11, and this feature in claim 1. *See supra*, Section VI.A.2; *see also* Ex. 1003, ¶ 206.

3. "a plurality of electrically conductive contacts disposed along an end of the lead body, wherein a portion of each of the conductor lumens is disposed radially underneath the conductive contacts;"

There is no material difference between this feature in claim 11, and this feature in claim 1. *See supra*, Section VI.A.3; *see also* Ex. 1003, ¶ 207.

4. "a plurality of conductor wires disposed in the conductor lumens, wherein at least one of the conductor wires is electrically connected to each conductive contact; and"

This clause varies slightly to its counterpart in claim 1, but it does not change the conclusion that it is rendered obvious. This element is broader, in that it does not expressly define that each conductor lumen includes an occupied portion and unoccupied portion. It is thus broader than the element discussed in Section VI.A.4. The combination of Stolz, Ormsby, and Black disclose and render the feature obvious for the same reasons as above. *See supra*, Section VI.A.4; *see also* Ex. 1003, ¶ 208.

5. "a solid, non-conductive material disposed, at least in part, radially underneath the conductive contacts within portions of the conductor lumens not occupied by conductor wire."

Again, this clause varies slightly from its counterpart in claim 1, which states that the solid, non-conductive material fills the previously defined "unoccupied portion of at least one of the conductor lumens." The two clauses are nearly the same. Here the solid, non-conductive material is disposed within portions of the conductor lumens not occupied by conductor wire (i.e., an

unoccupied portion of claim 1). The same rationale applies here as discussed above in Section VI.A.5. The combination of Stolz, Ormsby, and Black disclose and render the feature obvious for the same reasons as above. *See supra*, Section VI.A.5; *see also* Ex. 1003, ¶¶ 209-211.

Petitioner further notes that independent claim 11 does not recite the sixth element of claim 1, stating "wherein the non-conductive material is thermally fused with the lead body from heat applied to the lead assembly, which heat is at a temperature to cause the non-conductive material to thermally reflow or melt."

L. Claim 12

1. "The lead assembly of claim 11,"

As discussed above, the combination of Stolz, Ormsby, and Black disclose and render obvious this limitation; *see* Ex. 1003, ¶ 212.

2. "wherein the non-conductive material is thermally fused with the lead body from heat applied to the lead assembly, which heat is at a temperature to cause the non-conductive material, to thermally reflow or melt."

There is no material difference between claim 12, and this feature in claim 1. *See supra*, Section VI.A.6; *see also* Ex. 1003, ¶ 213.

M. Claim 13

1. "The lead assembly of claim 11,"

As discussed above, the combination of Stolz, Ormsby, and Black disclose and render obvious this limitation; *see* Ex. 1003, ¶ 214.

2. "comprising a plurality of spacers disposed between adjacent pairs of the conductive contacts."

There is no material difference between this feature in claim 13, and this feature in claim 2. *See supra*, Section VI.B.2; *see also* Ex. 1003, ¶ 215.

N. Claim 14

1. "The lead assembly of claim 13,"

As discussed above, the combination of Stolz, Ormsby, and Black disclose and render obvious this limitation; *see* Ex. 1003, ¶ 216.

2. "wherein the spacers and the non-conductive material are thermally fused together from heat applied to the lead assembly."

There is no material difference between this feature in claim 14, and this feature in claim 3, and this feature would have been obvious for the same reasons. *See supra*, Section VI.C.2; *see also* Ex. 1003, ¶ 217.

O. Claim 15

1. "The lead assembly of claim 11,"

As discussed above, the combination of Stolz, Ormsby, and Black disclose and render obvious this limitation; *see* Ex. 1003, ¶ 218.

2. "wherein a material of the spacers and the non-conductive material are a same material."

There is no material difference between this feature in claim 15, and this feature in claim 4, and this feature would have been obvious for the same reasons. *See supra*, Section VI.D.2; *see also* Ex. 1003, ¶ 219.

P. Claim 16

1. "The lead assembly of claim 11,"

As discussed above, the combination of Stolz, Ormsby, and Black disclose and render obvious this limitation; *see* Ex. 1003, ¶ 220.

2. "wherein a material of the spacers and the non-conductive material are different materials."

There is no material difference between this feature in claim 16, and this feature in claim 5, and this feature would have been obvious for the same reasons. *See supra*, Section VI.E.2; *see also* Ex. 1003, ¶ 221.

Q. Claim 17

1. "The lead assembly of claim 11,"

As discussed above, the combination of Stolz, Ormsby, and Black disclose and render obvious this limitation; *see* Ex. 1003, ¶ 222.

2. "wherein the plurality of electrically conductive contacts are located on a proximal end of the stimulation lead."

There is no material difference between this feature in claim 17, and this feature in claim 6, and this feature would have been obvious for the same reasons. *See supra*, Section VI.F.2; *see also* Ex. 1003, ¶ 223.

R. Claim 18

1. "The lead assembly of claim 11,"

As discussed above, the combination of Stolz, Ormsby, and Black disclose and render obvious this limitation; *see* Ex. 1003, ¶ 224.

2. "wherein the plurality of electrically conductive contacts are located on a distal end of the stimulation lead."

There is no material difference between this feature in claim 18, and this feature in claim 7, and this feature would have been obvious for the same reasons. *See supra*, Section VI.G.2; *see also* Ex. 1003, ¶ 225.

S. Claim 19

1. "The lead assembly of claim 11,"

As discussed above, the combination of Stolz, Ormsby, and Black disclose and render obvious this limitation; *see* Ex. 1003, ¶ 226.

2. "wherein the non-conductive material is thermally fused with the lead body."

There is no material difference between this feature in claim 19, and this feature in claim 1, and this feature would have been obvious for the same reasons. *See supra*, Section VI.A.6; *see also* Ex. 1003, ¶ 227.

VII. Nevro is unaware of any secondary considerations of non-obviousness

It is BSNC's affirmative burden to come forth with evidence of secondary indicia of non-obviousness as to the claims of the '747 patent. Nevro is not aware of any such evidence or information that could have any nexus to the claims of the '747 patent. Ex. 1003, ¶¶228-230. Nevro, however, reserves its right to respond to any assertion of secondary indicia of non-obviousness advanced by BSNC.

VIII. Standing (37 C.F.R. § 42.104(a))

Nevro certifies that the ’747 patent is available for *inter partes* review, and that Nevro is not barred or estopped from requesting an *inter partes* review of the ’747 patent.

The assignee of the ’747 patent, BSNC, filed a complaint against Nevro in the District of Delaware (Case No. 1:16-cv-01163) on December 9, 2016, alleging infringement of the ’747 patent. The present petition is being filed within one year of Nevro being served with the complaint.

IX. Mandatory Notices (37 C.F.R. § 42.8)

A. Real Party In Interest

The real party-in-interest of this petition is Nevro Corp.

B. Related Matters

The ’747 patent is the subject of one civil action: *Boston Scientific Corporation et al. v. Nevro Corp.*, Case No. 1:16-cv-01163 (D. Del.), filed December 9, 2016. Nevro has filed several other IPR petitions on other patents involved in that suit, including: IPR2017-01811 and IPR2017-01812, challenging the claims of U.S. Patent No. 6,895,280, filed July 21, 2017; IPR2017-01920, also challenging the claims of the ’280 patent, filed August 11, 2017; IPR2017-01831, challenging the claims of U.S. Patent No. 7,437,193, filed July 21, 2017; and

IPR2017-01899, challenging the claims of U.S. Patent No. 7,587,241, filed July 31, 2017.

C. Lead and Back-up Counsel

Pursuant to 37 C.F.R. § 42.8(b)(3) and 42.10(a), Petitioner Nevro appoints the following counsel:

Jon E. Wright (Reg. No. 50,720, jwright-PTAB@skgf.com) as its lead counsel; and **Richard D. Coller III** (Reg. No. 60,390, rcoller-PTAB@skgf.com), **Ian Soule** (Reg. No. 74,290, isoule-PTAB@skgf.com), and **Nirav Desai** (Reg. No. 69,105, ndesai-PTAB@skgf.com), as its back-up counsel, all at the address: STERNE, KESSLER, GOLDSTEIN & FOX P.L.L.C., 1100 New York Avenue, N.W., Washington, D.C., 20005, phone number (202) 371-2600, and facsimile (202) 371-2540.

Additional back-up counsel include:

Ching-Lee Fukuda (Reg. No. 44,334, clfukuda@sidley.com, 212-839-7364) and **Sona De** (to be *pro hac vice*, sde@sidley.com, 212-839-7363), both at the address: Sidley Austin LLP, 787 Seventh Avenue, New York, New York 10019 .

Benjamin H. Huh (Reg. No. 61,207, bhuh@sidley.com, 202-736-8342), at the address: Sidley Austin LLP, 1501 K Street N.W., Washington, DC 20005.

D. Service Information

Petitioner consents to electronic service by email at:

jwright-PTAB@skgf.com, **rcoller-PTAB@skgf.com**, **ndesai-PTAB@skgf.com, isoule-PTAB@skgf.com, PTAB@skgf.com, clfukuda@sidley.com, sde@sidley.com**, and **bhuh@sidley.com**.

Respectfully submitted,
STERNE, KESSLER, GOLDSTEIN & FOX P.L.L.C.

/Jon E. Wright/

Jon E. Wright, Reg. No. 50,720
Attorney for Petitioner Nevro Corp.

Date: November 2, 2017

1100 New York Avenue, N.W.
Washington, D.C. 20005-3934
(202) 371-2600

CERTIFICATION OF SERVICE (37 C.F.R. §§ 42.6(e), 42.105(a))

The undersigned hereby certifies that on November 2, 2017, true and correct copies of the foregoing **PETITION FOR *INTER PARTES* REVIEW OF U.S. PATENT NO. 8,650,747**, Petitioner's Power of Attorney, and all associated exhibits were served in their entirety on the following parties via FedEx Express® or Express Mail:

BOSTON SCIENTIFIC NEUROMODULATION CORP.
c/o Lowe Graham Jones
701 Fifth Avenue, Suite 4800
Seattle, WA 98104
PAIR Correspondence Address for U.S.P.N. 8,650,747

YOUNG CONAWAY STARGATT & TAYLOR LLP
Karen L. Pascale
1000 North King Street
Wilmington, Delaware 19801
Other address known to the petitioner as likely to effect service

ARNOLD & PORTER KAYE SCHOLER LLP
Matthew M. Wolf
601 Massachusetts Avenue, N.W.
Washington, DC 20001-3743
Other address known to the petitioner as likely to effect service

STERNE, KESSLER, GOLDSTEIN & FOX P.L.L.C.
/Jon E. Wright/

Jon E. Wright, Reg. No. 50,720
Attorney for Petitioner Nevro Corp.

Date: November 2, 2017

1100 New York Avenue, N.W.
Washington, D.C. 20005-3934
(202) 371-2600

CERTIFICATE OF COMPLIANCE WITH TYPE-VOLUME LIMITATION, TYPEFACE REQUIREMENTS, AND TYPE STYLE REQUIREMENTS

1. This Petition complies with the type-volume limitation of 14,000 words, comprising 11,988 words, excluding the parts exempted by 37 C.F.R. § 42.24(a).

2. This Petition complies with the general format requirements of 37 C.F.R. § 42.6(a) and has been prepared using Microsoft® Word 2010 in 14 point Times New Roman.

Respectfully submitted,

STERNE, KESSLER, GOLDSTEIN & FOX P.L.L.C.

/Jon E. Wright/

Jon E. Wright, Reg. No. 50,720
Attorney for Petitioner Nevro Corp.

Date: November 2, 2017

1100 New York Avenue, N.W.
Washington, D.C. 20005-3934
(202) 371-2600