US009867680B2

(12) **United States Patent**
Damon

(10) **Patent No.: US 9,867,680 B2**
(45) **Date of Patent: *Jan. 16, 2018**

(54) **ORTHODONTIC BRACKET**

(71) Applicant: **Ormco Corporation**, Orange, CA (US)

(72) Inventor: **Dwight H. Damon**, Spokane, WA (US)

(73) Assignee: **Ormco Corporation**, Orange, CA (US)

(*) Notice: Subject to any disclaimer, the term of this patent is extended or adjusted under 35 U.S.C. 154(b) by 0 days.

This patent is subject to a terminal disclaimer.

(21) Appl. No.: **14/969,881**

(22) Filed: **Dec. 15, 2015**

(65) **Prior Publication Data**

US 2016/0095674 A1 Apr. 7, 2016

Related U.S. Application Data

(60) Continuation of application No. 12/755,054, filed on Apr. 6, 2010, now Pat. No. 9,277,973, which is a division of application No. 11/408,873, filed on Apr. 19, 2006, now Pat. No. 7,704,072.

(51) **Int. Cl.**
A61C 3/00 (2006.01)
A61C 7/28 (2006.01)

(52) **U.S. Cl.**
CPC ***A61C 7/287*** (2013.01)

(58) **Field of Classification Search**
CPC A61C 7/287; A61C 7/12; A61C 7/14
See application file for complete search history.

(56) **References Cited**

U.S. PATENT DOCUMENTS

550,508	A	11/1895	How	
1,166,766	A	1/1916	Kelsey	
2,549,528	A *	4/1951	Russell	A61C 7/287 433/13
2,602,998	A	7/1952	Sprague	
2,671,964	A	3/1954	Russell et al.	

(Continued)

FOREIGN PATENT DOCUMENTS

EP	0 623 320 A1	11/1994
EP	1508310 A2	2/2005

(Continued)

OTHER PUBLICATIONS

Ralph A. Lewis; Office Action issued in U.S. Appl. No. 12/147,877; dated Nov. 24, 2010; 23 pages; U.S. Patent and Trademark Office.

(Continued)

Primary Examiner — Heidi M Eide
(74) *Attorney, Agent, or Firm* — Wood Herron & Evans LLP

(57) **ABSTRACT**

An orthodontic bracket is described and which includes a base member defining an archwire slot having an opening, and at least one projection extending outwardly from the base member; a ligating slide moveable between a first position which is clear of the archwire slot, and second position where the ligating slide projects over the opening of the archwire slot; and a biasing member borne by the ligating slide, and resiliently cooperating with the projection, and wherein the biasing member has a first portion which receives the projection when the ligating slide is in the first position, and a second portion which receives the projection when the ligating slide is in the second position.

13 Claims, 24 Drawing Sheets

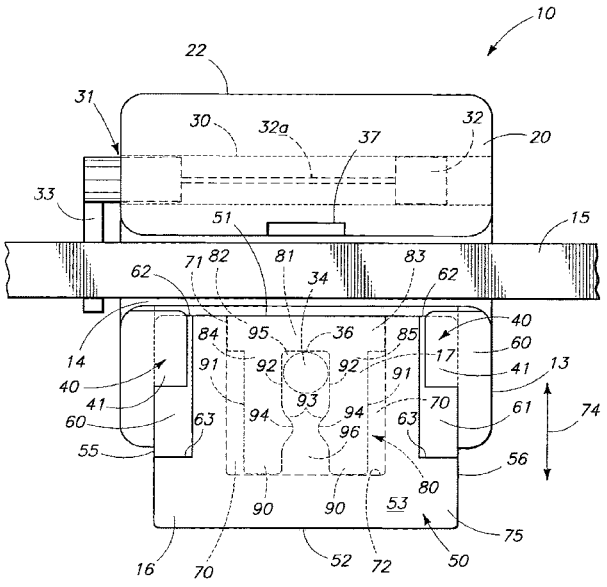

(56) **References Cited**

U.S. PATENT DOCUMENTS

2,686,365	A		8/1954	Schurter
3,087,244	A		4/1963	Huettner et al.
3,438,132	A		4/1969	Rubin
3,748,740	A		7/1973	Wildman
3,750,288	A		8/1973	Culbreth
3,772,787	A		11/1973	Hanson
3,780,437	A		12/1973	Wildman
3,871,098	A		3/1975	Dean
3,946,488	A		3/1976	Miller et al.
RE28,889	E		7/1976	Wildman
4,001,940	A		1/1977	Cusato
4,035,919	A		7/1977	Cusato
4,077,126	A		3/1978	Pletcher
4,144,642	A		3/1979	Wallshein
4,196,517	A		4/1980	Forster
4,209,906	A		7/1980	Fujita
4,229,166	A		10/1980	Cusato et al.
4,248,588	A		2/1981	Hanson
4,277,236	A		7/1981	Kurz
4,323,347	A		4/1982	Weissman
4,355,975	A		10/1982	Fujita
4,371,337	A		2/1983	Pletcher
4,419,078	A		12/1983	Pletcher
4,443,189	A		4/1984	Wildman
4,449,933	A		5/1984	Forni
4,455,138	A		6/1984	Sheridan
4,465,461	A		8/1984	Schutz
4,559,012	A		12/1985	Pletcher
4,655,708	A		4/1987	Fujita
4,696,646	A		9/1987	Maitland
4,698,017	A		10/1987	Hanson
4,708,651	A		11/1987	Buchanan
4,747,777	A		5/1988	Ward
4,768,950	A		9/1988	Armstrong et al.
4,799,882	A		1/1989	Kesling
4,822,277	A		4/1989	Nevell
4,875,855	A		10/1989	Beckett
4,878,840	A		11/1989	Reynolds
4,904,183	A		2/1990	Hannan et al.
4,964,800	A		10/1990	Good
5,028,234	A		7/1991	Schweitzer et al.
5,039,302	A		8/1991	Keys
5,094,614	A		3/1992	Wildman
5,184,631	A		2/1993	Ikeda
5,261,813	A		11/1993	Baker
5,269,681	A		12/1993	Degnan
5,275,557	A		1/1994	Damon
5,295,831	A		3/1994	Patterson et al.
5,295,886	A		3/1994	Wildman
5,320,532	A		6/1994	Farzin-Nia et al.
5,322,435	A	*	6/1994	Pletcher A61C 7/145 433/10
5,326,261	A		7/1994	Rains
5,429,500	A		7/1995	Damon
5,439,378	A		8/1995	Damon
5,466,151	A		11/1995	Damon
5,474,444	A		12/1995	Wildman
5,474,445	A		12/1995	Voudouris
5,474,446	A		12/1995	Wildman et al.
5,511,976	A		4/1996	Wildman
5,607,299	A		3/1997	Nicholson
5,630,715	A		5/1997	Voudouris
5,630,716	A		5/1997	Hanson
5,711,666	A		1/1998	Hanson
5,743,737	A		4/1998	Hawn et al.
5,791,897	A		8/1998	Wildman
5,857,849	A		1/1999	Kurz
5,857,850	A		1/1999	Voudouris
5,863,198	A		1/1999	Doyle
5,863,199	A		1/1999	Wildman
5,873,716	A		2/1999	Kesling
5,890,893	A		4/1999	Heiser
5,906,486	A		5/1999	Hanson
5,908,293	A		6/1999	Voudouris
5,913,680	A		6/1999	Voudouris
5,971,753	A		10/1999	Heiser
6,071,118	A		6/2000	Damon
6,071,119	A		6/2000	Christoff et al.
6,168,428	B1		1/2001	Voudouris
6,174,162	B1		1/2001	Pozzi
6,190,166	B1		2/2001	Sasakura
6,193,508	B1		2/2001	Georgakis
6,247,923	B1		6/2001	Vashi
6,296,482	B1		10/2001	Kapit
6,319,004	B1		11/2001	Forsline
6,368,105	B1		4/2002	Voudouris et al.
6,375,458	B1		4/2002	Moorleghem et al.
6,428,314	B1		8/2002	Jones, Jr. et al.
6,485,299	B1		11/2002	Wildman
6,506,049	B2	*	1/2003	Hanson A61C 7/285 433/11
6,582,226	B2		6/2003	Jordan et al.
6,632,088	B2		10/2003	Voudouris
6,659,767	B2		12/2003	Abels et al.
6,659,769	B2		12/2003	Flanagan
6,701,939	B2		3/2004	Freeman
6,726,474	B2		4/2004	Spencer
6,786,718	B2		9/2004	Lauren et al.
6,796,797	B2		9/2004	Muller et al.
6,942,483	B2		9/2005	Heiser
6,994,548	B2		2/2006	Perret, Jr.
7,011,517	B2		3/2006	Nicozisis
7,104,791	B2		9/2006	Hanson
7,128,571	B2		10/2006	Young
7,214,056	B2		5/2007	Stockstill
7,255,557	B2		8/2007	Forster
7,267,545	B2		9/2007	Oda
7,335,020	B2		2/2008	Castner et al.
7,416,408	B2		8/2008	Farzin-Nia et al.
7,419,375	B2		9/2008	Farzin-Nia et al.
7,442,039	B2		10/2008	Opin et al.
7,481,651	B2		1/2009	Sernetz et al.
7,621,743	B2		11/2009	Bathen et al.
7,704,072	B2		4/2010	Damon
7,963,767	B2		6/2011	Lewis et al.
8,029,276	B1		10/2011	Lokar
8,033,824	B2		10/2011	Oda et al.
9,277,973	B2		3/2016	Damon
2002/0006595	A1		1/2002	Voudouris
2004/0166458	A1		8/2004	Opin et al.
2004/0265778	A1		12/2004	Kliff et al.
2005/0239012	A1	*	10/2005	Bathen A61C 7/287 433/10
2005/0244775	A1		11/2005	Abels et al.
2005/0277082	A1		12/2005	Christoff
2006/0063123	A1		3/2006	Cleary et al.
2006/0177790	A1		8/2006	Farzin-Nia et al.
2006/0228662	A1		10/2006	Lokar et al.
2006/0263737	A1		11/2006	Oda
2007/0072143	A1		3/2007	Sommer
2007/0082315	A1		4/2007	Sabater
2007/0160949	A1		7/2007	Voudouris
2007/0178419	A1		8/2007	Berman et al.
2007/0178422	A1		8/2007	Voudouris
2007/0202460	A1		8/2007	Chao
2007/0224569	A1		9/2007	Oda
2007/0243497	A1		10/2007	Voudouris
2007/0248928	A1		10/2007	Damon
2007/0259301	A1		11/2007	Hagelganz et al.
2007/0259304	A1		11/2007	Hagelganz et al.
2008/0113311	A1		5/2008	Forster
2009/0004619	A1		1/2009	Oda et al.
2009/0155734	A1		6/2009	Damon
2010/0178629	A1		7/2010	Oda et al.
2010/0196838	A1		8/2010	Damon
2011/0123942	A1		5/2011	Rudman

FOREIGN PATENT DOCUMENTS

JP	5454495		4/1979
JP	2001503305	A	3/2001
JP	2001104340	A	4/2001
JP	2001269356	A	10/2001
JP	2004188177	A	7/2004

(56) **References Cited**

FOREIGN PATENT DOCUMENTS

JP	2004255190	A	9/2004
JP	2004526536	A	9/2004
JP	2005502388	A	1/2005
WO	94/23666	A1	10/1994
WO	0033760	A1	6/2000
WO	2005007011	A2	1/2005
WO	2009116560	A1	9/2009

OTHER PUBLICATIONS

European Patent Office, International Search Report and Written Opinion in PCT Application No. PCT/US2008/068545, dated Jan. 26, 2009.

U.S. Patent and Trademark Office, International Search Report and Written Opinion in PCT Application No. PCT/US2010/023718, dated Apr. 15, 2010.

U.S. Patent and Trademark Office, International Search Report and Written Opinion in PCT Application No. PCT/US2010/021153, dated Mar. 22, 2010.

Radial. (n.d.) Dictionary.com Unabridged. Retrieved Oct. 20, 2009, from Dictionary.com website: http://dictionary.reference.com/browse/radial.

http://www.classoneorthodontics.com, website, Feb. 9, 2009, 3 pgs.

European Patent Office, The International Bureau of WIPO, International Preliminary Report on Patentability in PCT Application No. PCT/US2008/068545, dated Jan. 5, 2010.

U.S. Patent and Trademark Office, Office Action in U.S. Appl. No. 11/408,873 dated May 15, 2009.

U.S. Patent and Trademark Office, Final Office Action in U.S. Appl. No. 11/408,873, dated Oct. 27, 2009.

U.S. Patent and Trademark Office, Office Action in U.S. Appl. No. 12/686,824, dated Dec. 16, 2011.

U.S. Patent and Trademark Office, Final Office Action in U.S. Appl. No. 12/686,824, dated Sep. 10, 2012.

U.S. Patent and Trademark Office, Notice of Allowance issued in U.S. Appl. No. 12/755,054 dated Jan. 14, 2016.

U.S. Patent and Trademark Office, final Office Action issued in U.S. Appl. No. 12/755,054 dated Sep. 21, 2015.

U.S. Patent and Trademark Office, Office Action issued in U.S. Appl. No. 12/755,054 dated Mar. 6, 2015.

U.S. Patent and Trademark Office, final Office Action issued in U.S. Appl. No. 12/755,054 dated Apr. 29, 2014.

U.S. Patent and Trademark Office, Office Action issued in U.S. Appl. No. 12/755,054 dated Nov. 12, 2013.

U.S. Patent and Trademark Office, final Office Action issued in U.S. Appl. No. 12/755,054 dated Mar. 25, 2013.

U.S. Patent and Trademark Office, Office Action issued in U.S. Appl. No. 12/755,054 dated Sep. 5, 2012.

European Patent Office, European Search Report issued in corresponding European Application No. EP08252175 dated Oct. 28, 2008.

U.S. Patent and Trademark Office, Official Action for corresponding U.S. Appl. No. 12/147,891, dated Dec. 10, 2010 (5 pages).

USPTO, final Office Action issued in related U.S. Appl. No. 12/147,891, dated May 26, 2011.

USPTO, Office Action issued in related U.S. Appl. No. 12/147,891, dated Dec. 20, 2011.

Japanese Patent Office, Office Action issued in related Japanese Patent Application Serial No. 2008-169272, dated Apr. 19, 2011.

U.S. Patent and Trademark Office, Office Action in U.S. Appl. No. 12/147,854, dated Nov. 26, 2010.

U.S. Patent and Trademark Office, Office Action in U.S. Appl. No. 12/147,854, dated Jun. 29, 2011.

U.S. Patent and Trademark Office, final Office Action in U.S. Appl. No. 12/147,854, dated Feb. 3, 2012.

http://www.classoneorthodontics.com website (2 pages) Mar. 2, 2006.

U.S. Patent and Trademark Office, Office Action in U.S. Appl. No. 14/971,012 dated May 10, 2016.

U.S. Patent and Trademark Office, Office Action in U.S. Appl. No. 14/968,065, dated Jun. 6, 2016.

* cited by examiner

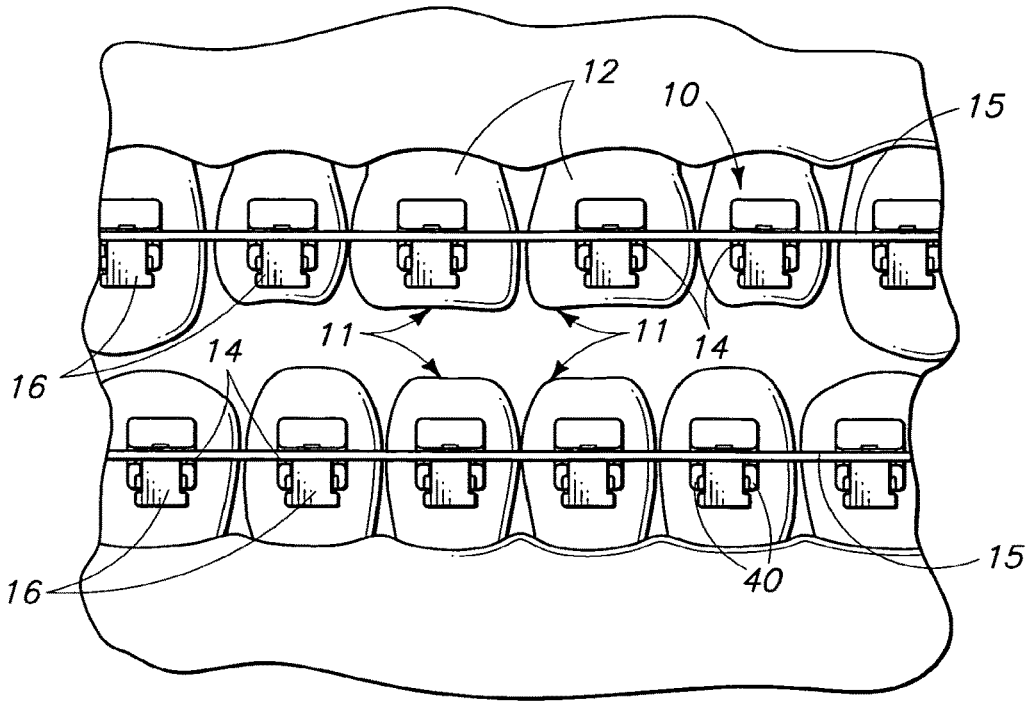
12
10
15
11
11
14
14
16
16
40
15

Fig 1

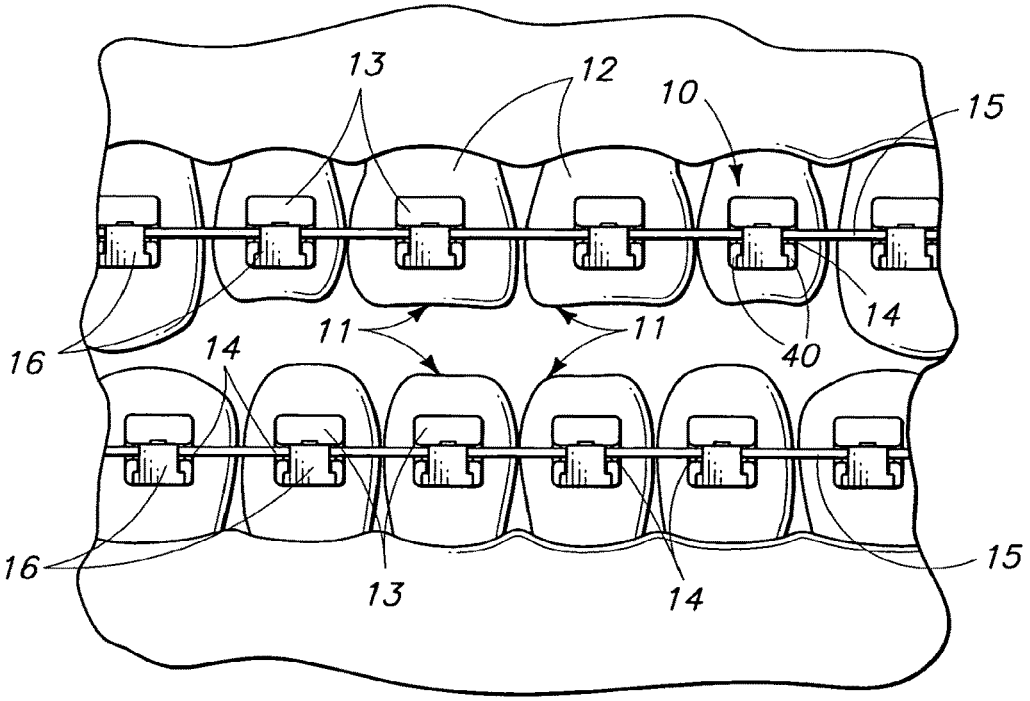
13
12
10
15
14
11
11
40
14
16
16
13
14
15

Fig 2

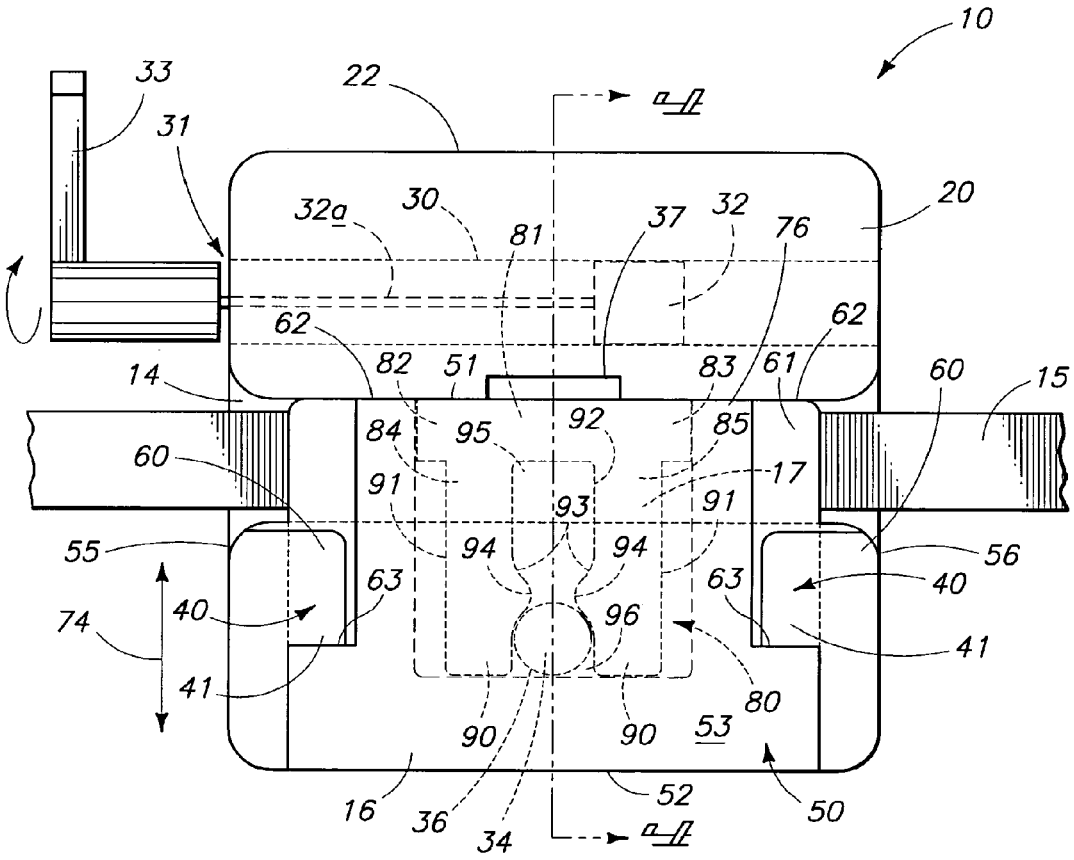
10
33
31
22
a
a
20
32a
30
81
37
32
76
62
62
14
82
51
83
61
60
15
84
95
92
85
60
91
17
93
91
55
94
94
56
63
63
40
74
40
96
41
41
80
90
90
53
16
36
34
52
50

FIG. 3

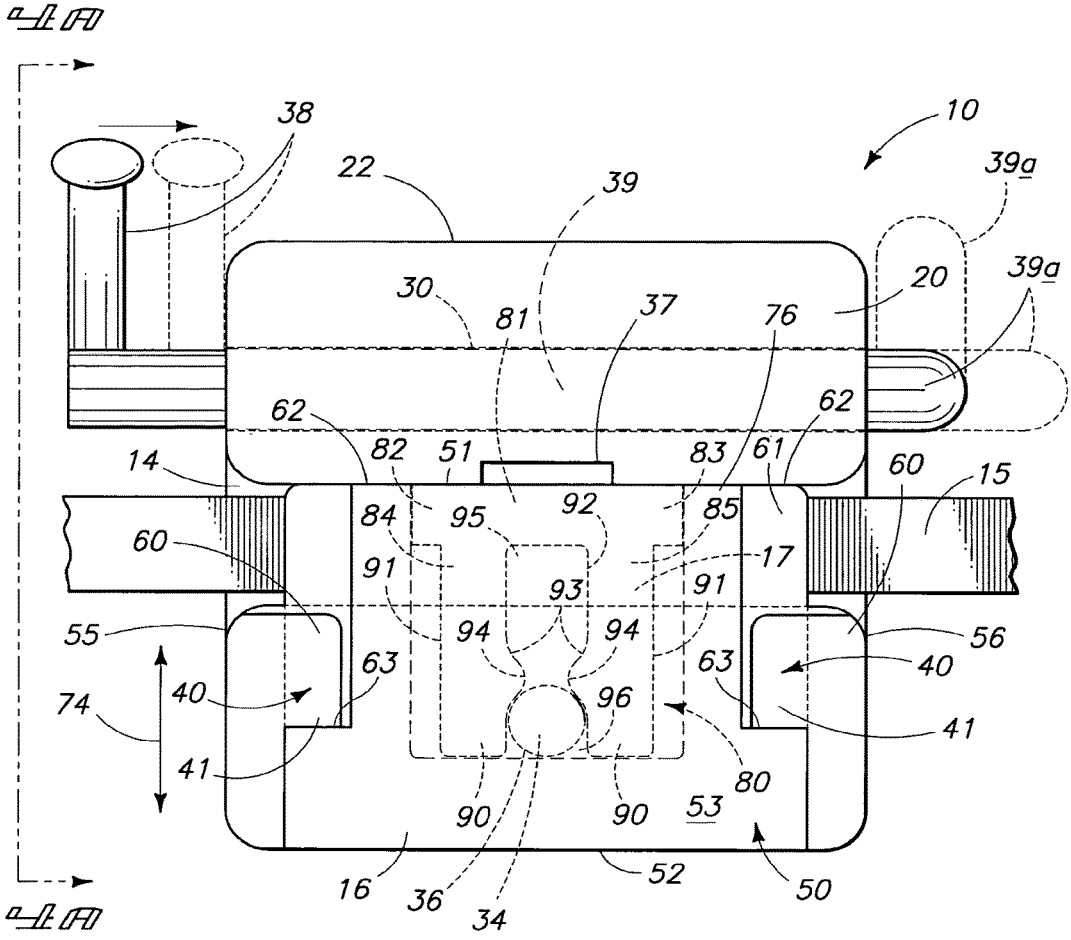
4A
38
22
39
10
39a
30
81
37
76
20
39a
62
62
82
51
83
61
14
60
15
84
95
92
85
60
17
91
93
91
55
94
94
56
63
63
40
40
74
96
41
41
80
90
90
53
16
36
34
52
50
4A

Fig 3A

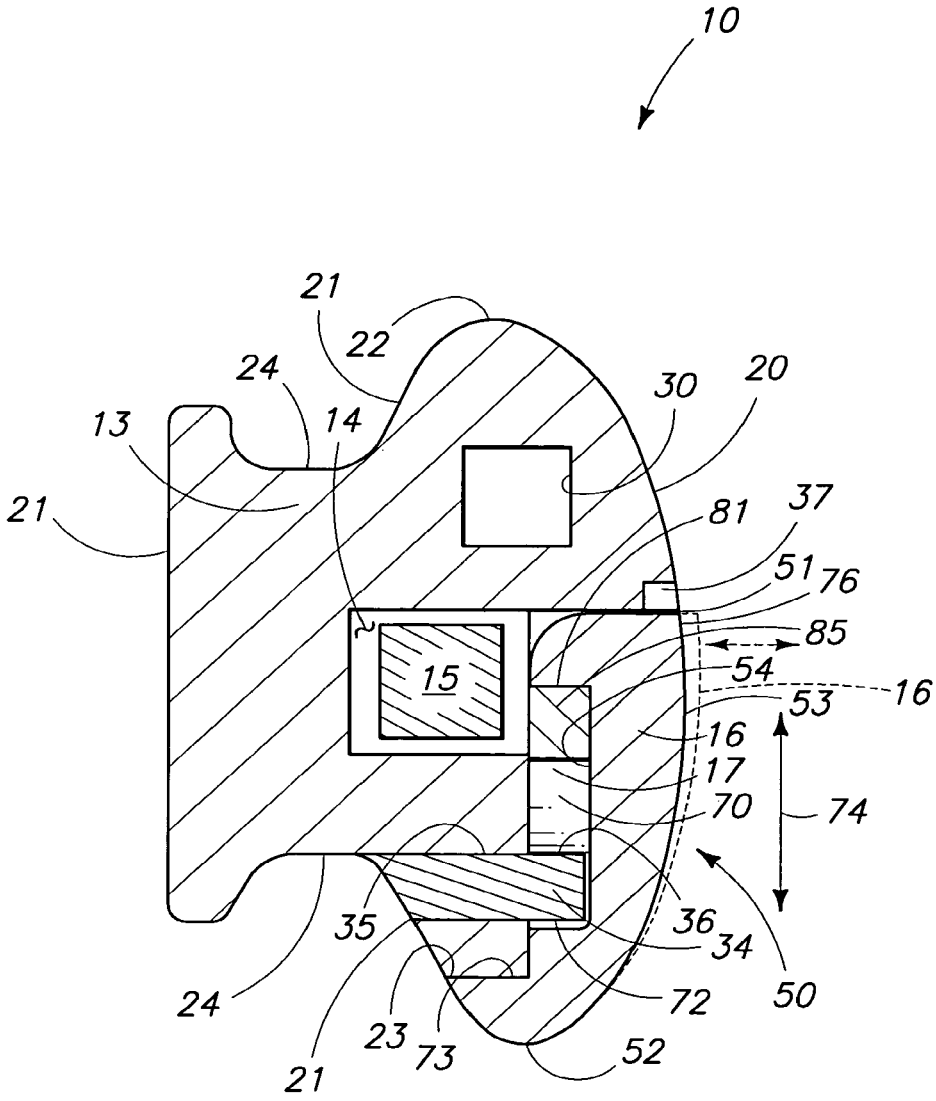
10
21
22
24
13
14
30
20
21
81
37
51
76
85
54
16
53
15
16
17
70
74
35
36
34
50
24
72
23
73
52
21

Fig. 4

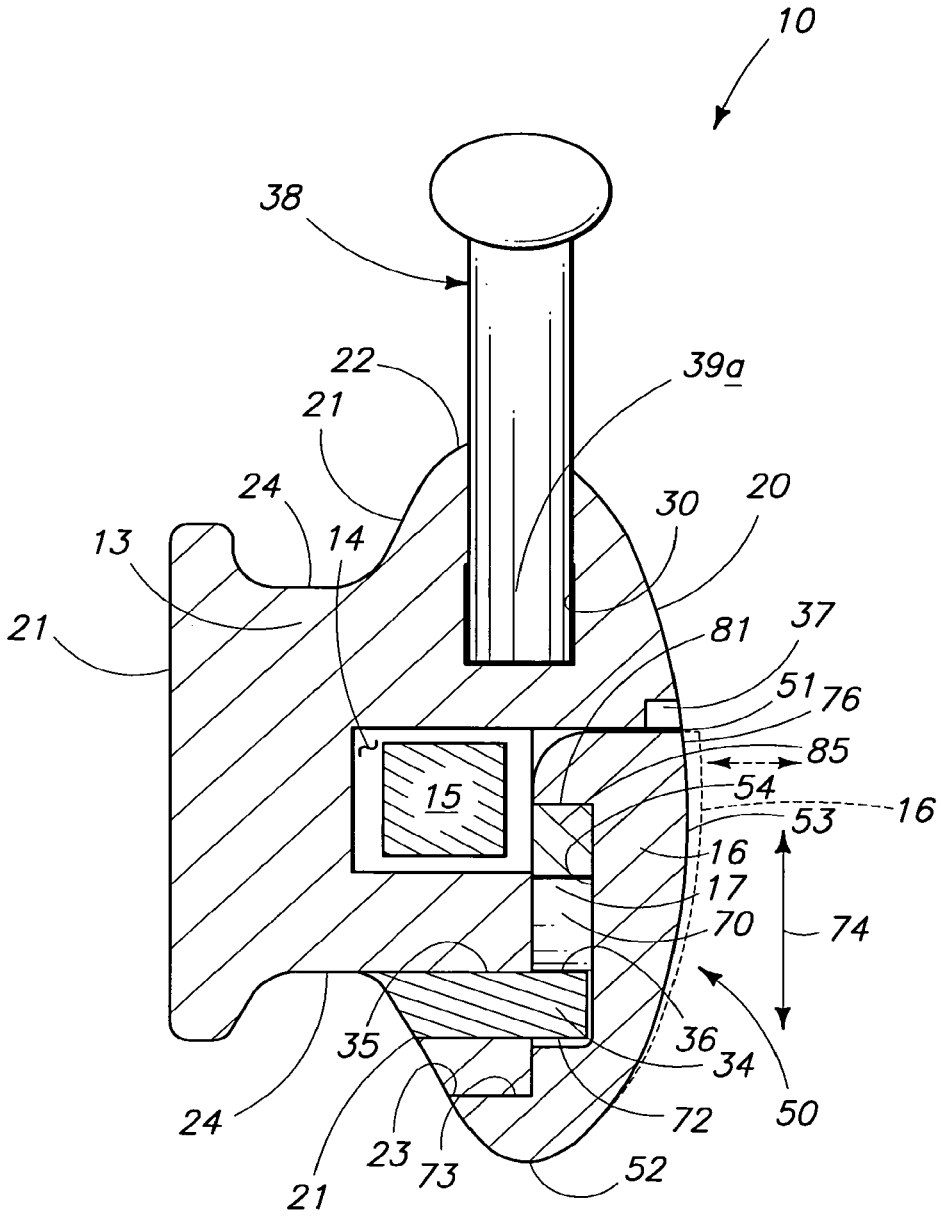
10
38
22
21
39a
24
30
20
13
14
21
81
37
51
76
85
54
16
53
15
16
17
70
74
35
36
34
24
72
50
23
73
52
21

Fig 4A

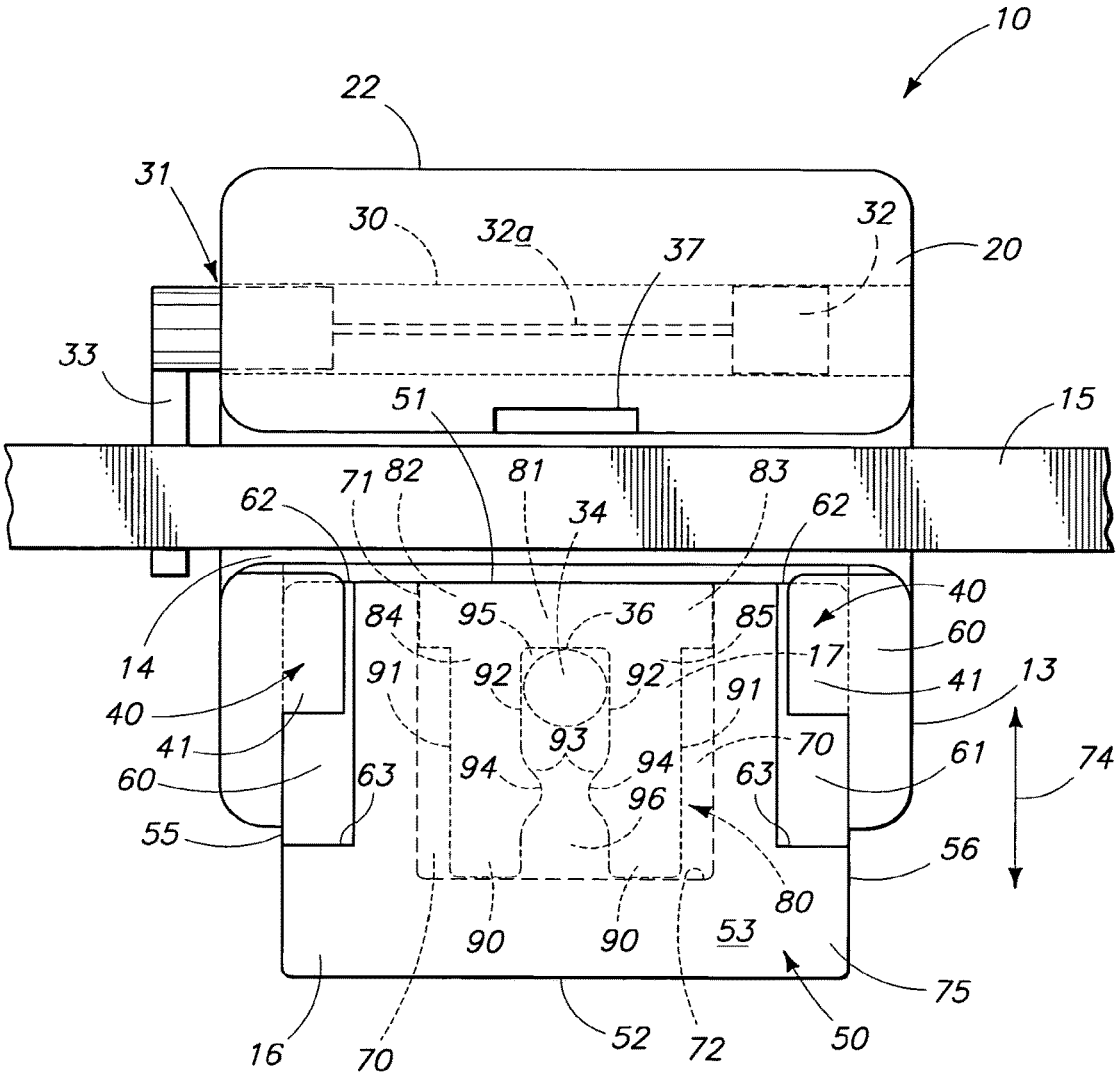
10
22
31
30
32a
37
32
20
33
51
15
71
82
81
83
62
34
62
40
14
84
95
36
85
60
17
91
92
92
41
13
40
91
41
93
70
61
74
60
63
94
94
63
96
55
56
80
90
90
53
75
16
70
52
72
50

Fig 5

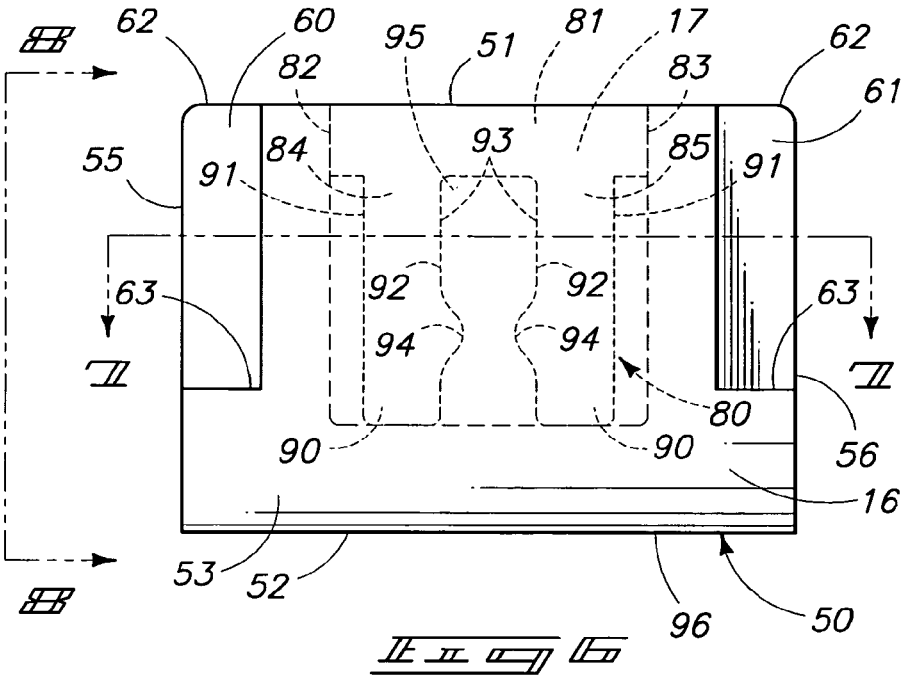
62
60
95
51
81
17
62
82
83
61
55
91
84
93
85
91
63
92
92
63
94
94
80
90
90
56
16
53
52
96
50

FIG. 6

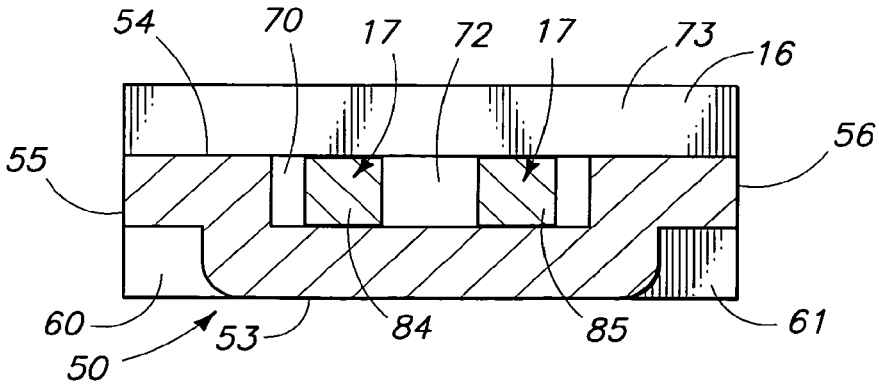
54
70
17
72
17
73
16
56
55
60
53
84
85
61
50

FIG. 7

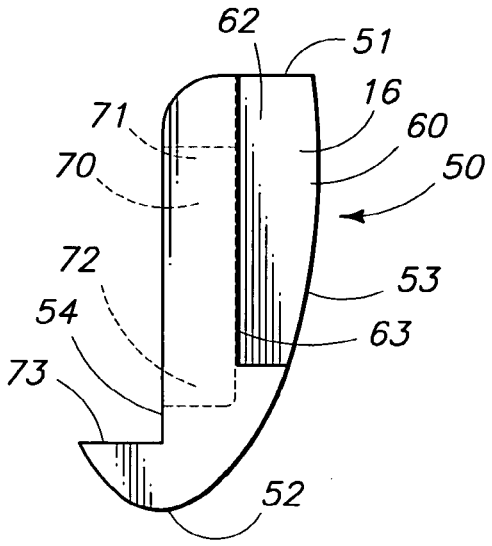
62
51
16
71
60
70
50
72
53
54
63
73
52

Fig 8

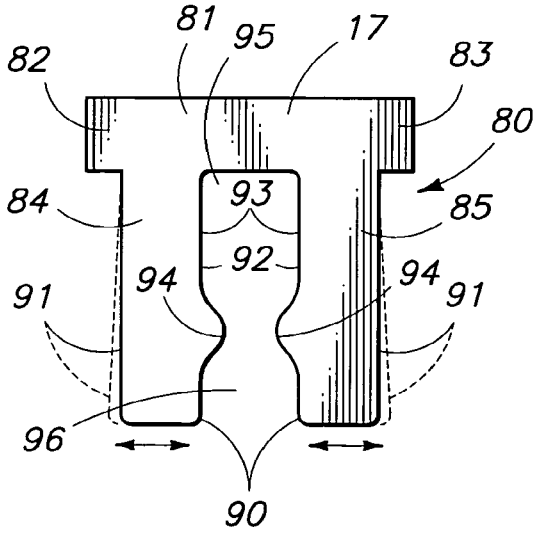
81
95
17
82
83
80
84
93
85
92
91
94
94
91
96
90

Fig 9

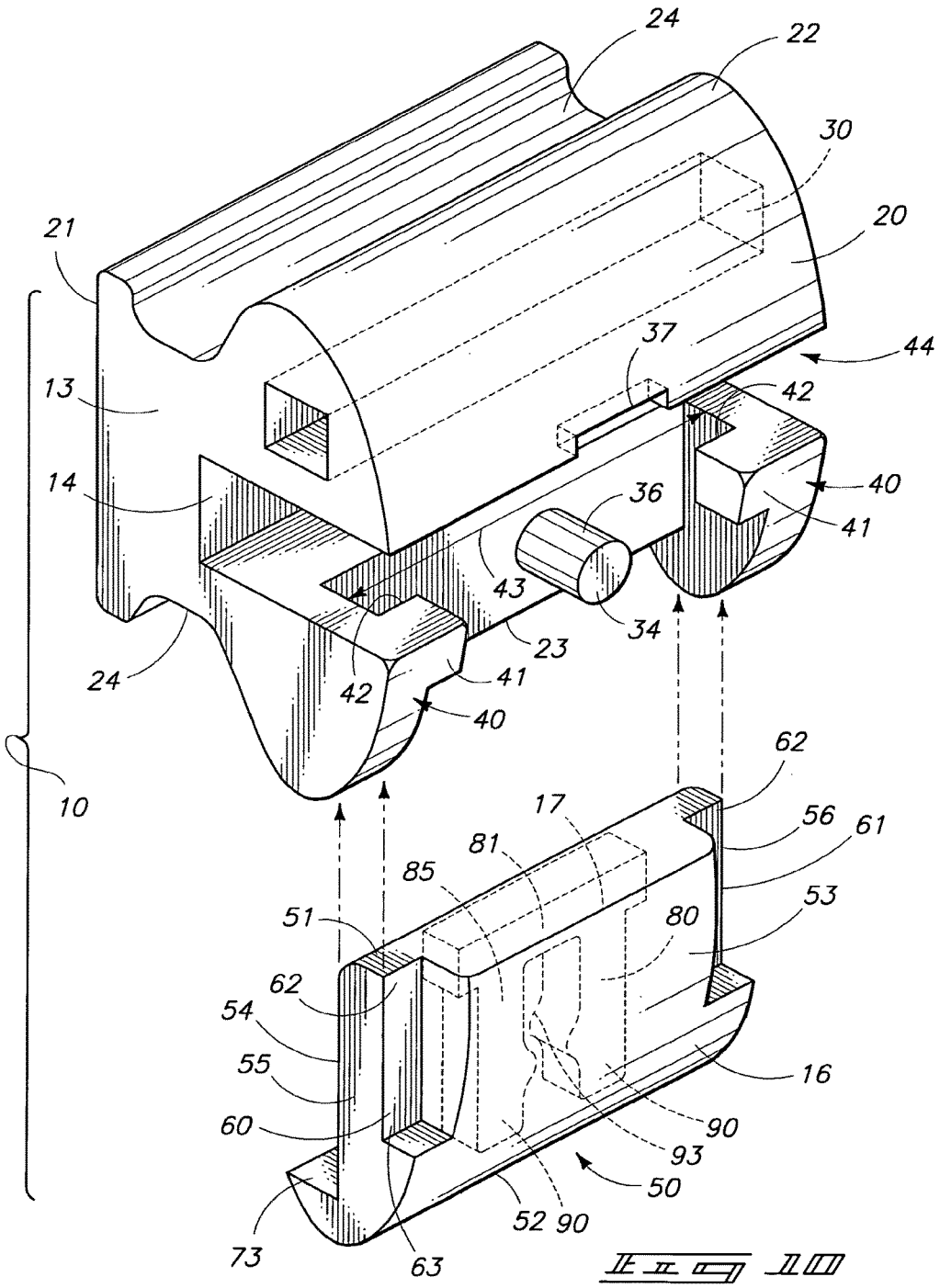
24
22
30
21
20
37
44
13
42
14
40
36
41
43
34
23
24
42
41
40
10
62
17
56
61
81
85
53
51
80
62
54
55
16
60
90
93
50
52
90
73
63

Fig 10

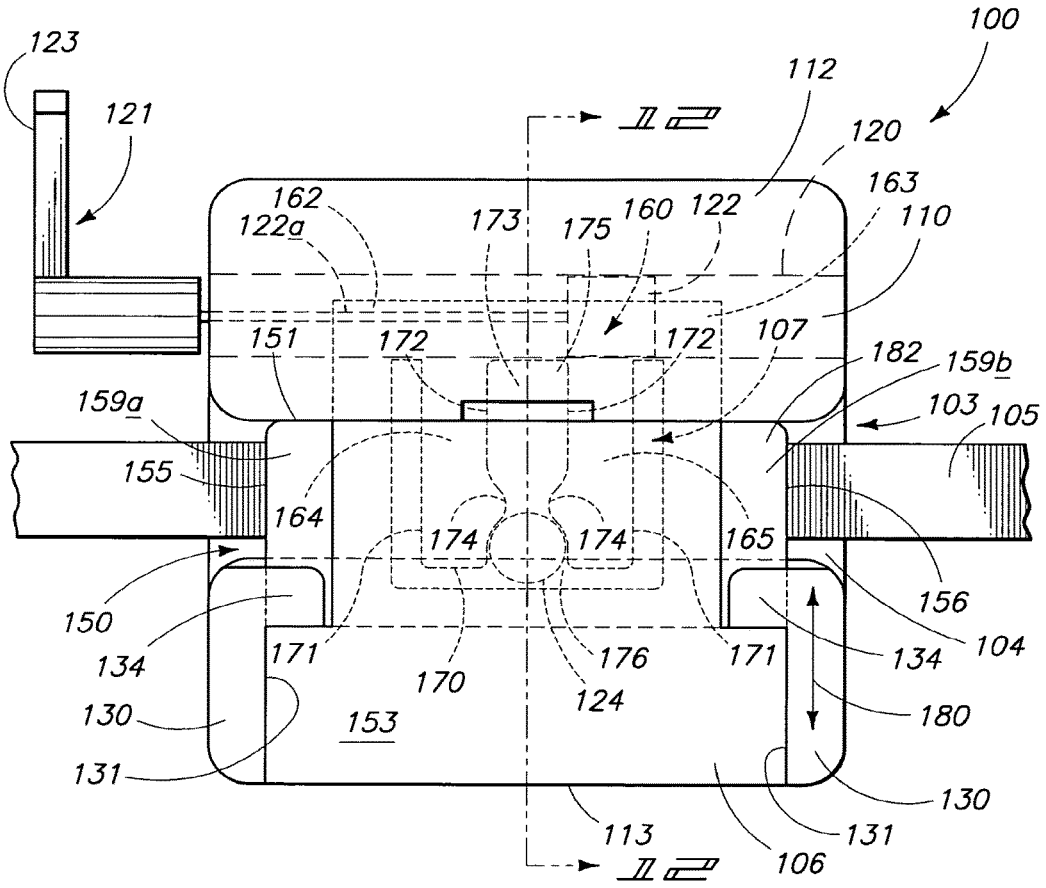
100
123
121
112
120
II
II
162
122a
173
175
160
122
163
110
151
172
172
107
182
159b
159a
103
105
155
164
174
174
165
156
150
134
171
170
176
171
134
104
130
153
124
180
131
130
113
131
106
II
II

Fig. 11

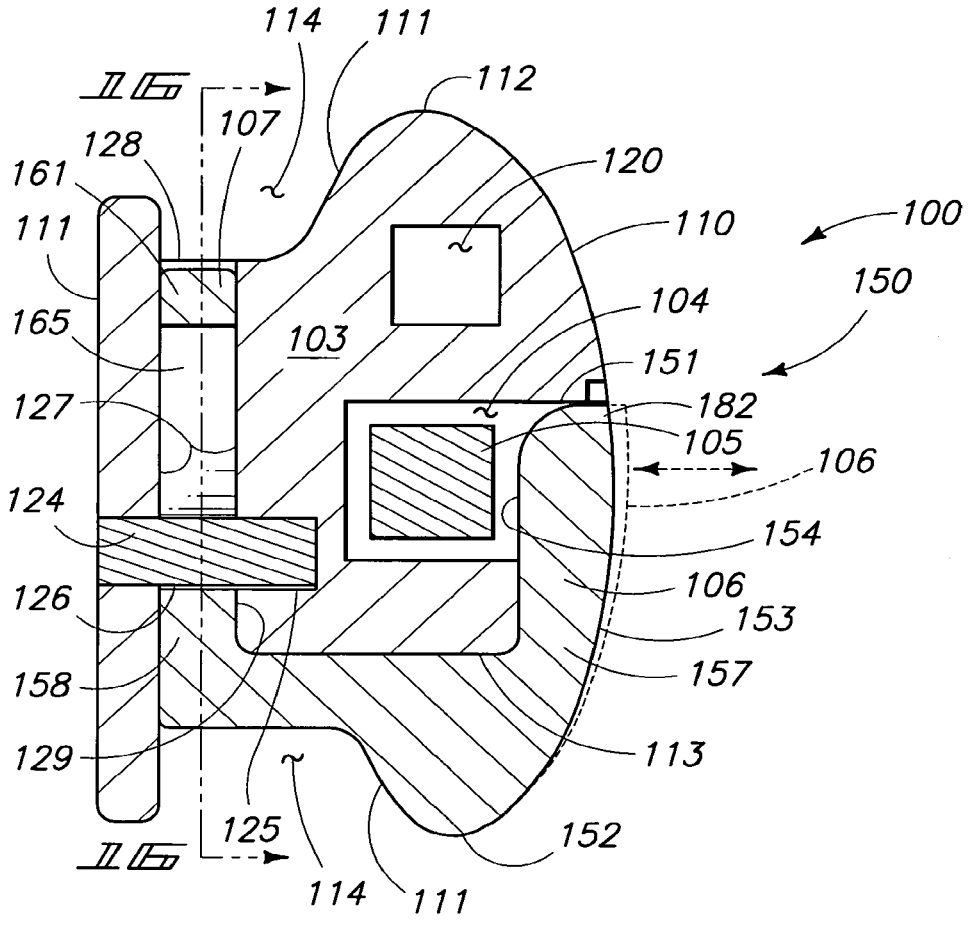
114
111
112
16
107
128
161
120
111
110
100
150
165
103
104
151
127
182
105
106
124
154
106
126
153
158
157
129
113
125
152
16
114
111

Fig 12

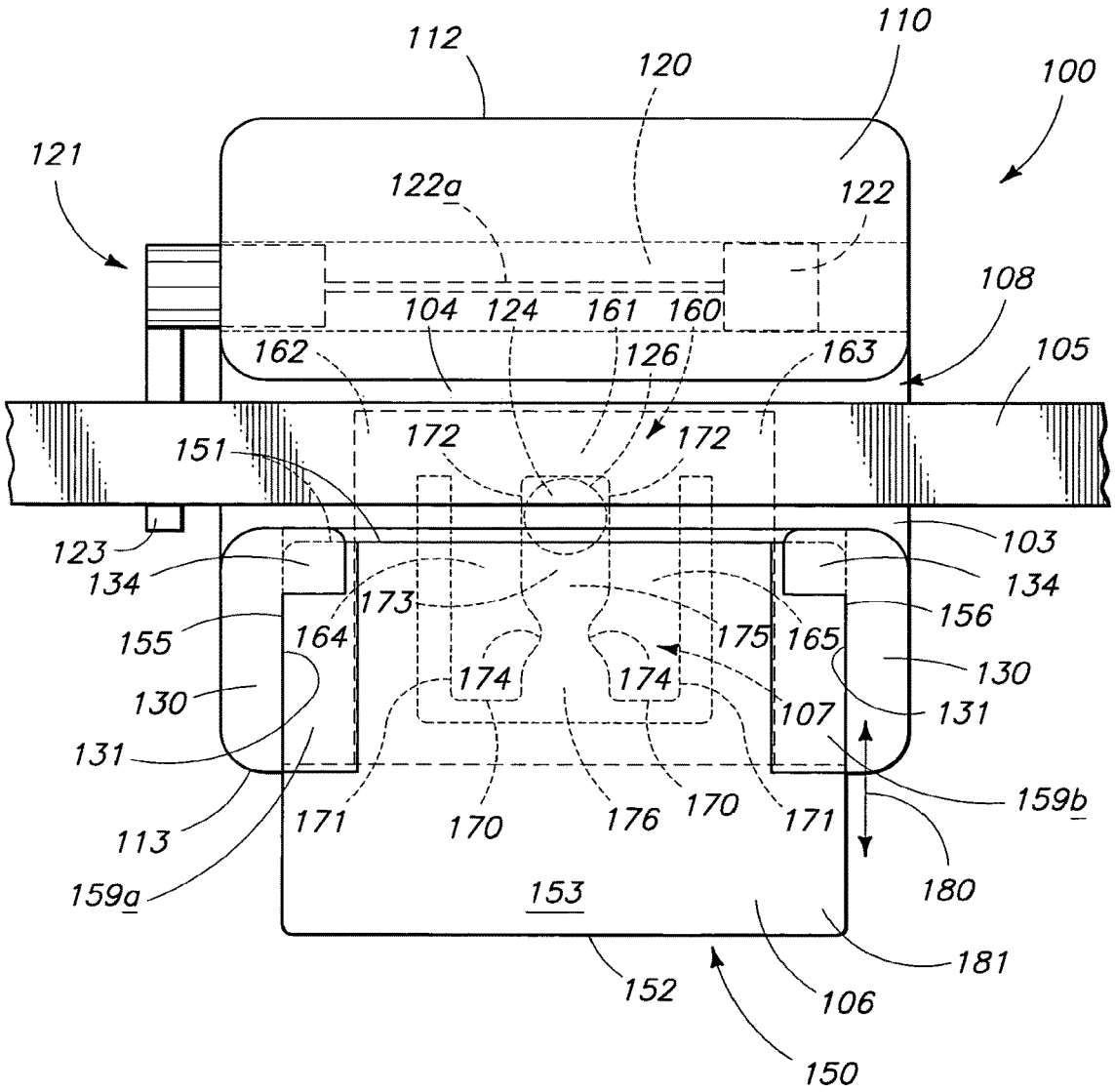
112
120
110
100
121
122a
122
108
104
124
161
160
162
126
163
105
172
172
151
123
103
134
134
173
156
155
164
175
165
130
174
174
130
107
131
131
159b
113
171
170
176
170
171
180
159a
153
181
152
106
150

Fig. 13

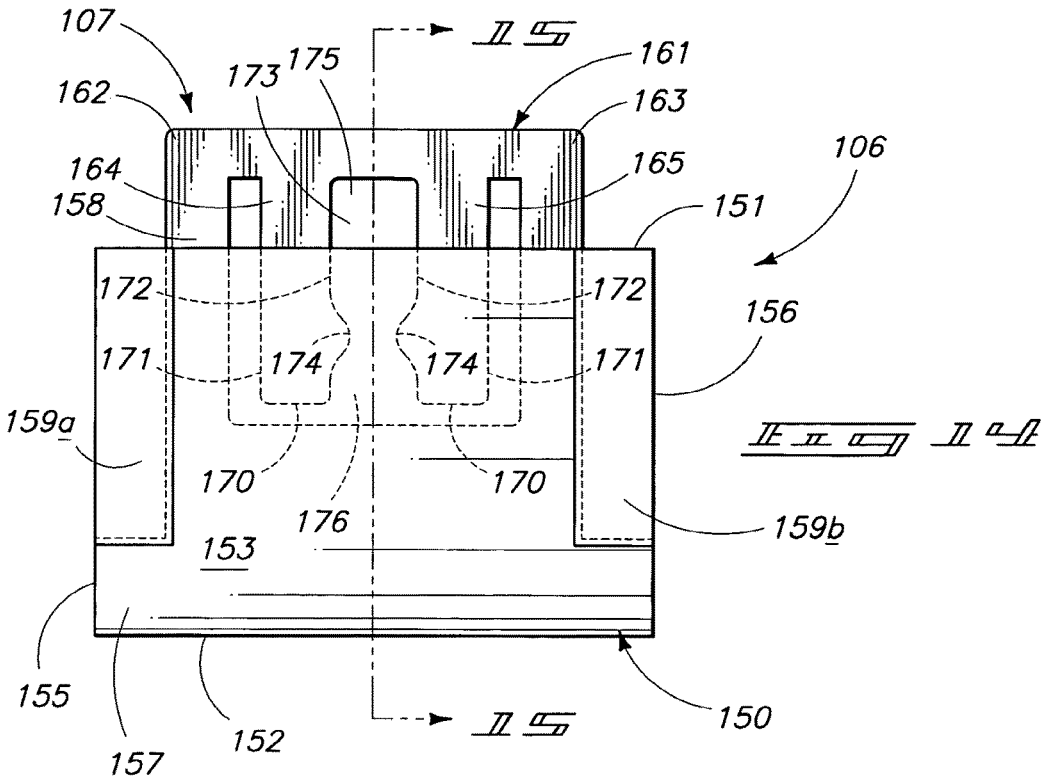
107
II
161
162
173
175
163
164
165
106
158
151
172
172
156
171
174
174
171
159a
170
170
176
159b
153
155
157
152
150
II

Fig. 14

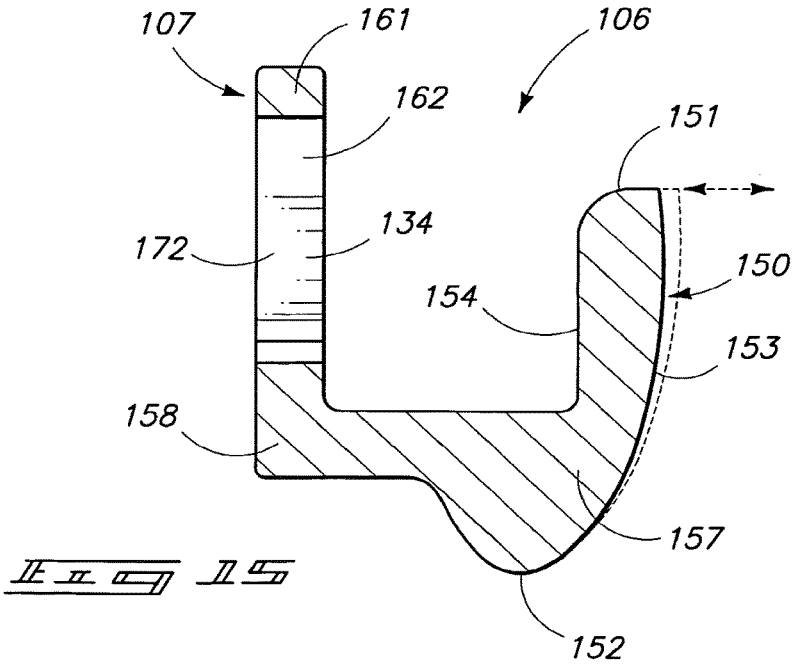
107
161
106
162
151
134
172
150
154
153
158
157
152

Fig. 15

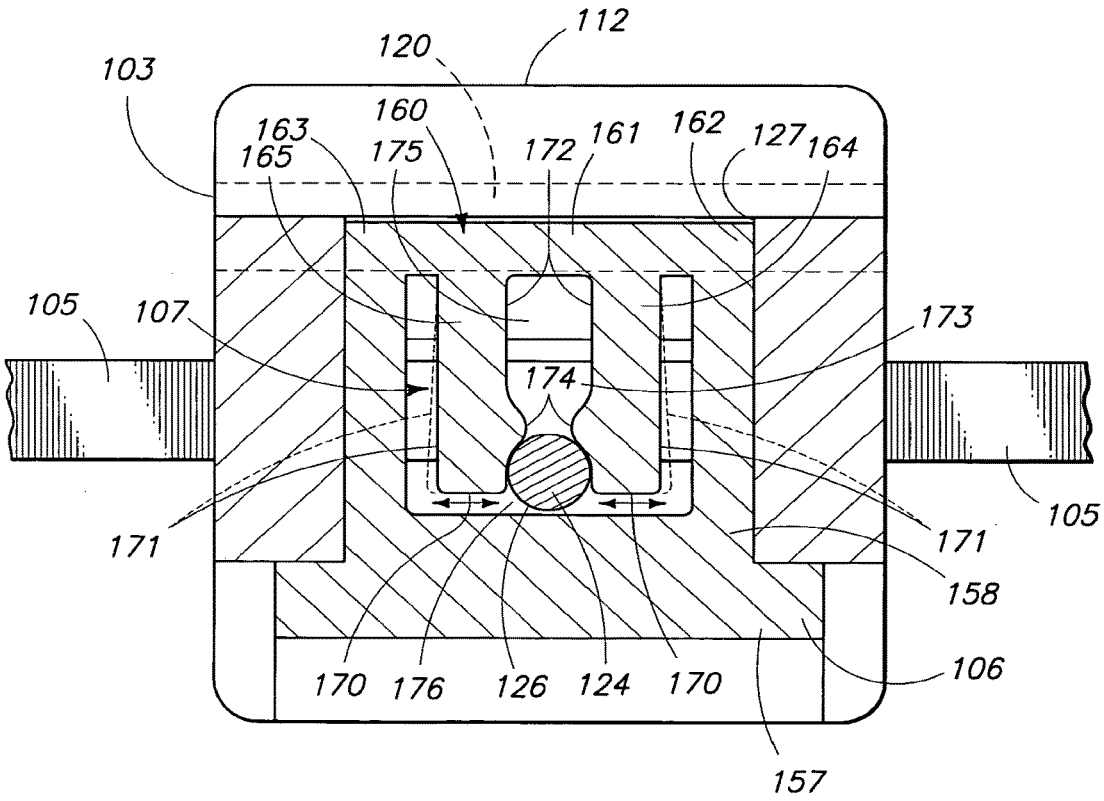
112
120
103
160
163
165
175
172
161
162
127
164
105
107
173
174
105
171
171
158
106
170
176
126
124
170
157

Fig 16

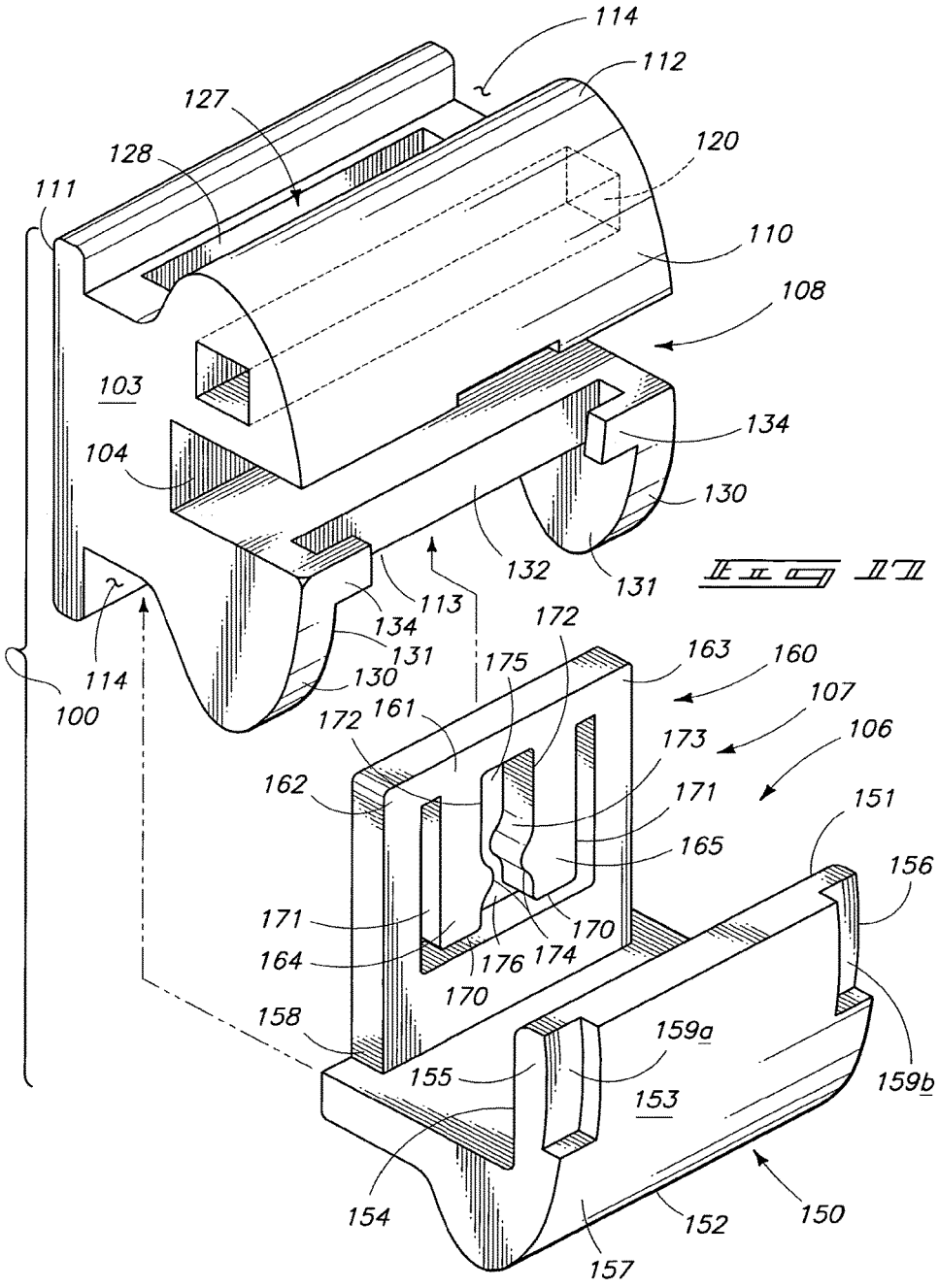
114
112
127
128
120
111
110
108
103
134
104
130
132
131
113
134
131
130
114
100
172
175
163
160
107
172
161
173
106
162
171
151
165
156
171
170
164
176
174
170
158
159a
155
153
159b
154
152
150
157

Fig 17

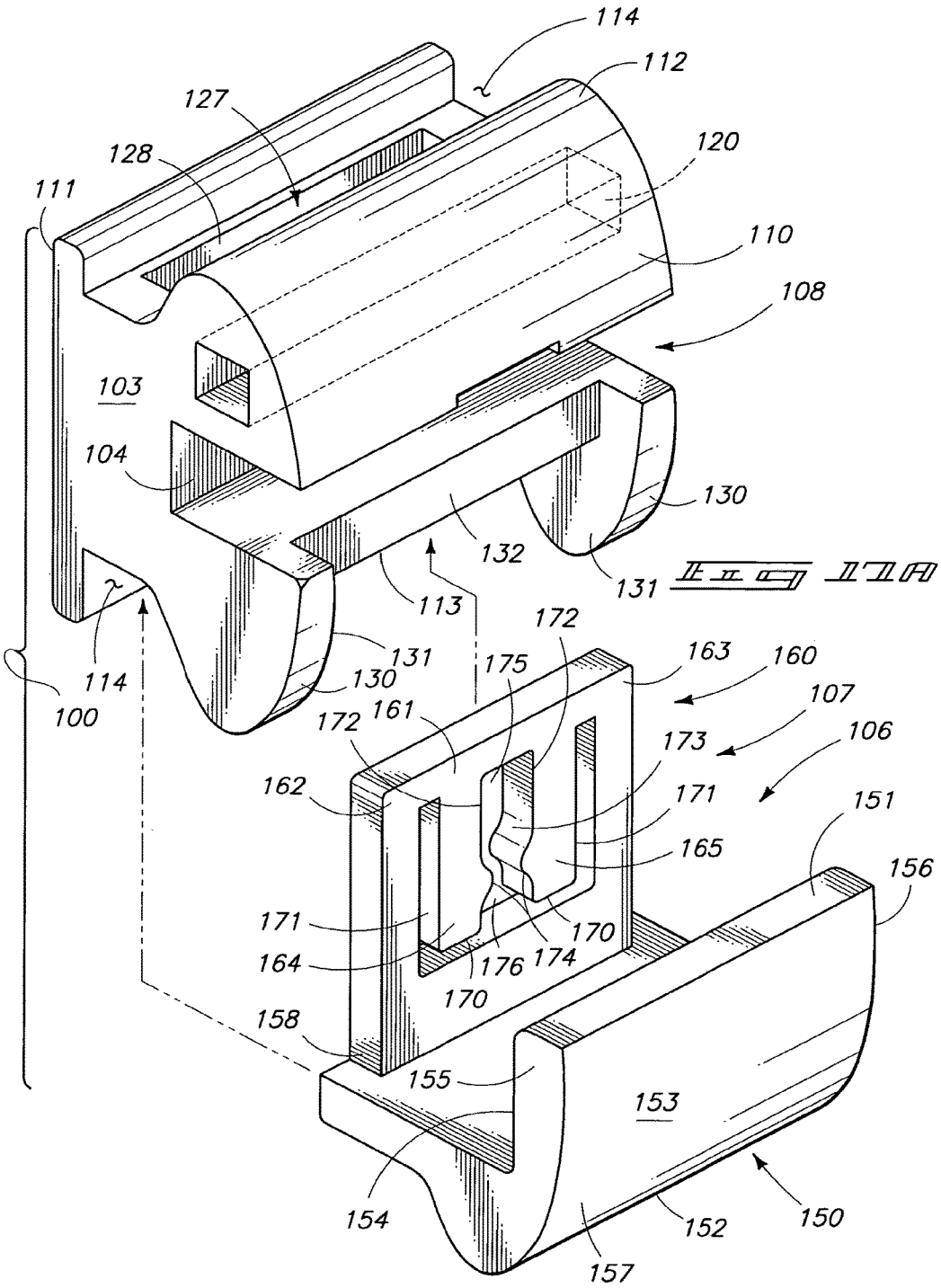
114
112
127
128
120
111
110
108
103
104
130
132
131
113
131
130
114
100
172
175
163
160
107
106
161
172
173
162
171
151
165
156
171
170
164
176
174
170
158
155
153
154
152
150
157

FIG 17A

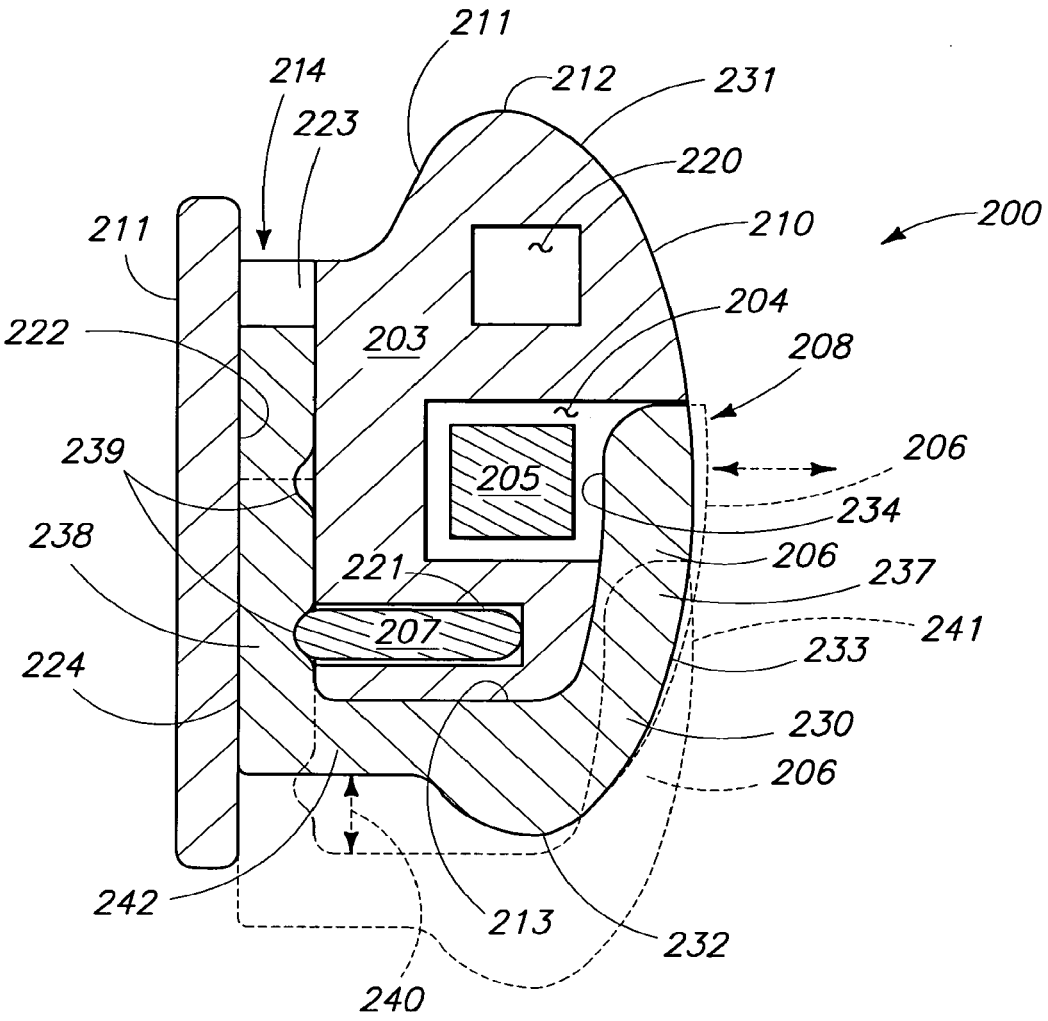
211
214
212
231
223
220
211
210
200
222
203
204
208
239
205
206
234
238
221
206
237
207
241
233
224
230
206
242
213
232
240

Fig 18

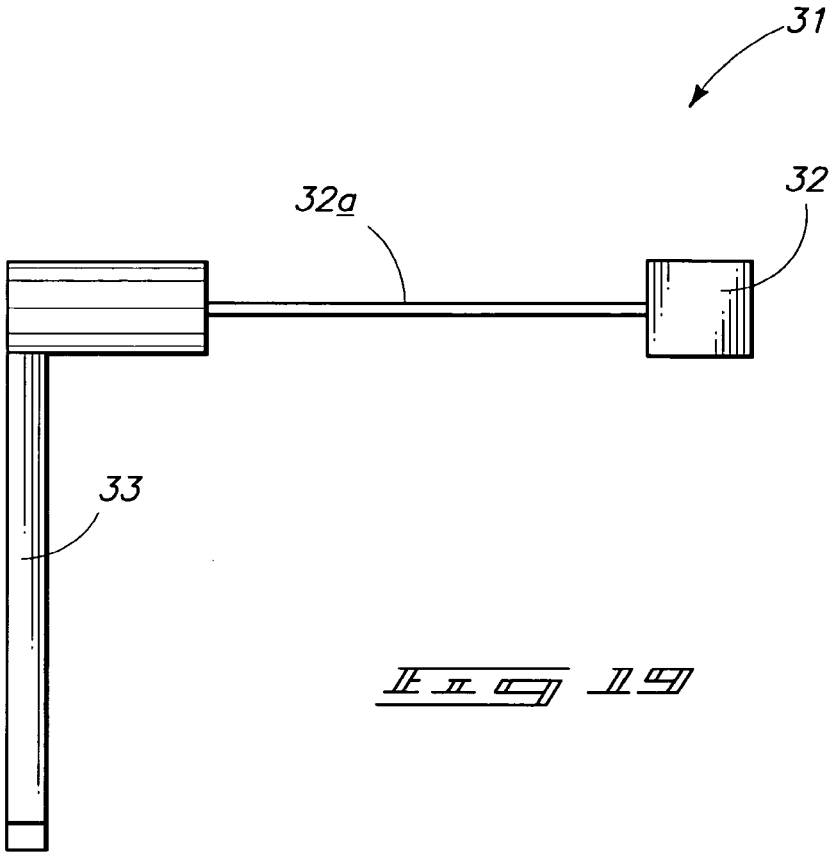

Fig 19

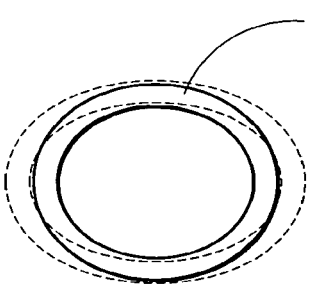

Fig 20

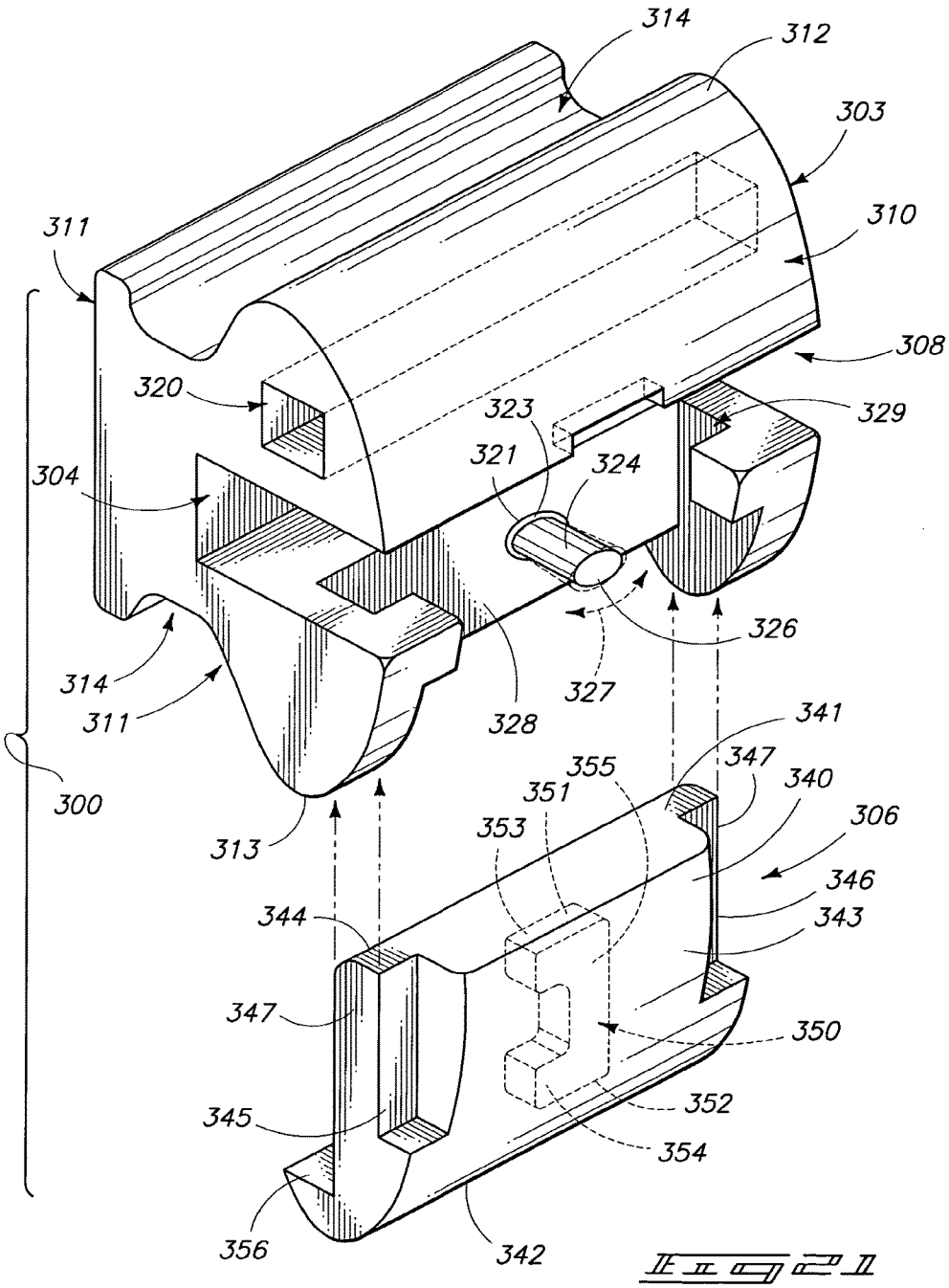
314
312
303
310
311
308
320
323
329
321
324
304
326
314
327
311
328
341
300
355
347
340
351
306
353
313
346
344
343
347
350
352
345
354
356
342

Fig 21

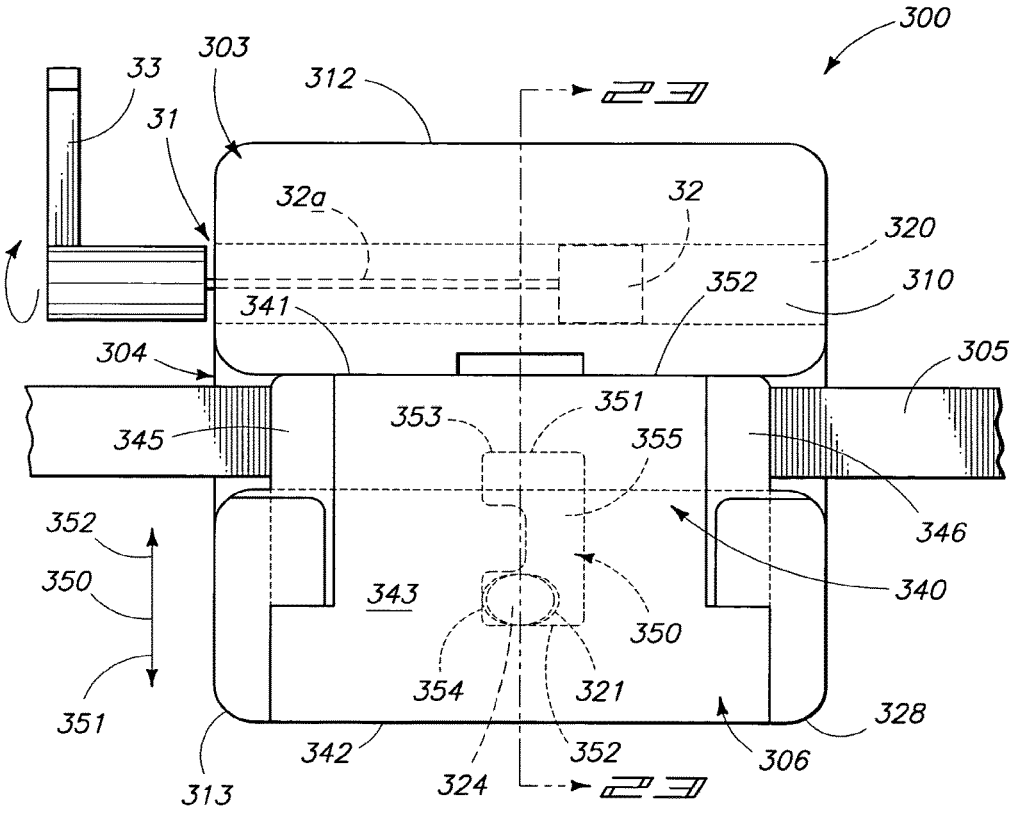
300
303
33
312
31
32a
32
320
352
310
341
304
305
351
353
345
355
346
352
350
340
343
350
354
321
351
328
342
352
306
313
324

Fig 22

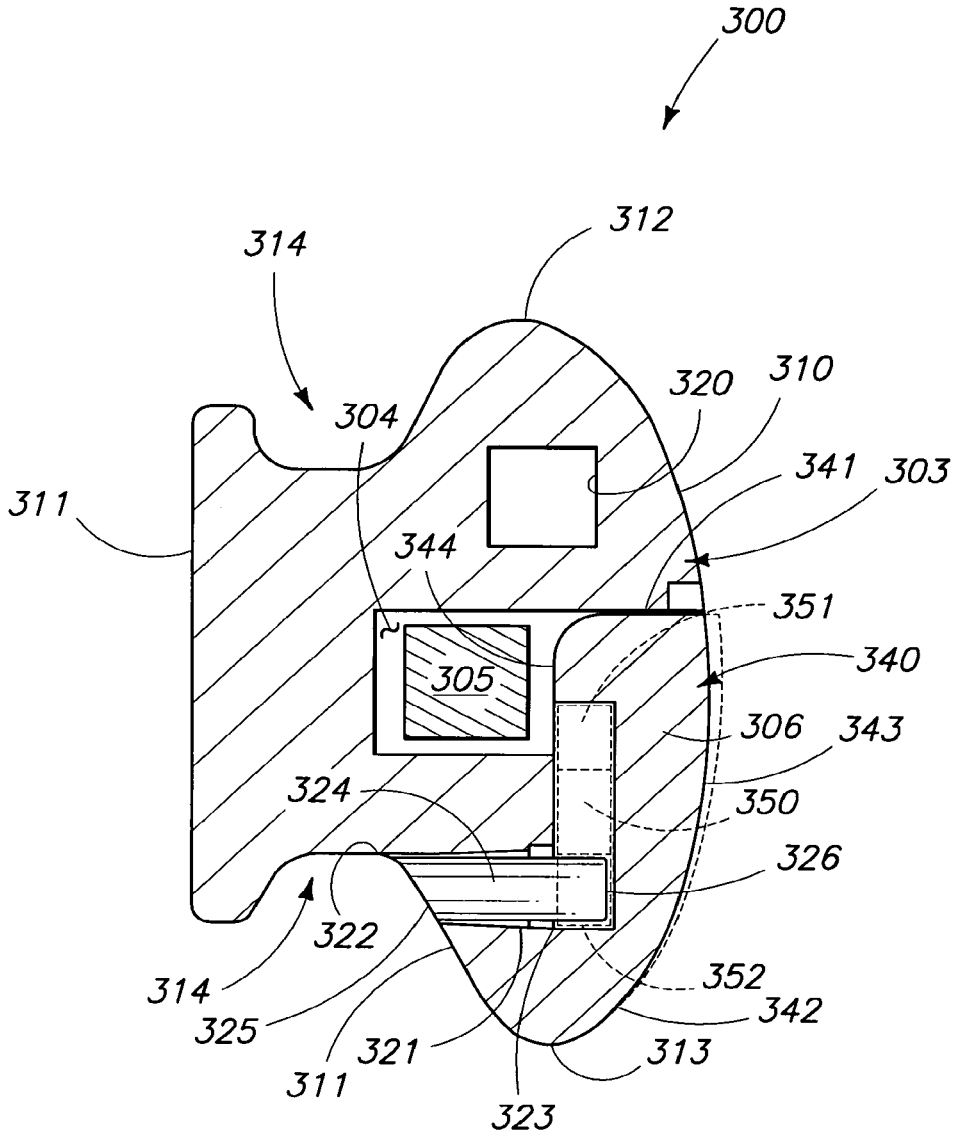
300
312
314
304
320
310
341
303
311
344
351
305
340
306
343
324
350
326
322
314
352
325
342
321
313
311
323

Fig 23

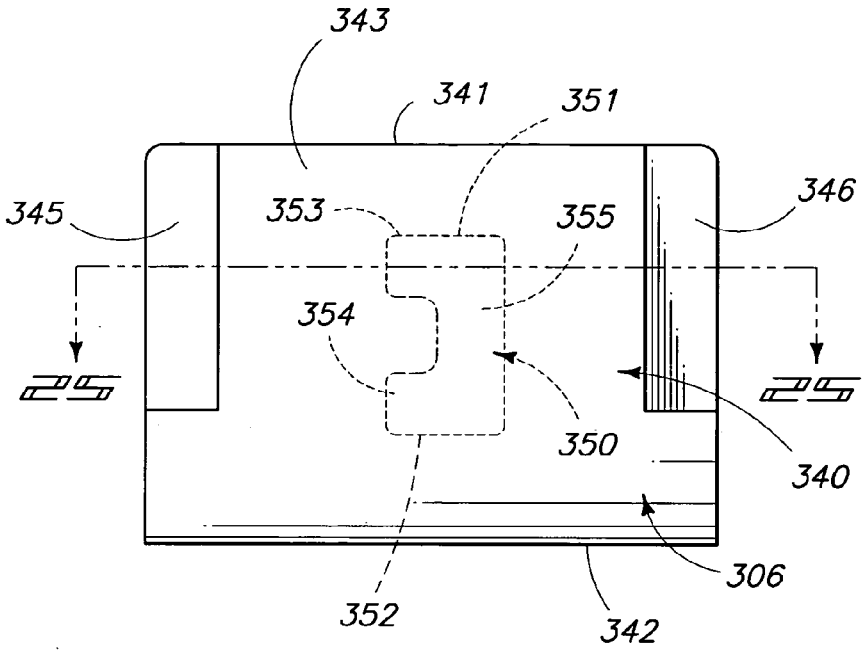
343
341
351
345
353
355
346
354
25
25
350
340
306
352
342

Fig 24

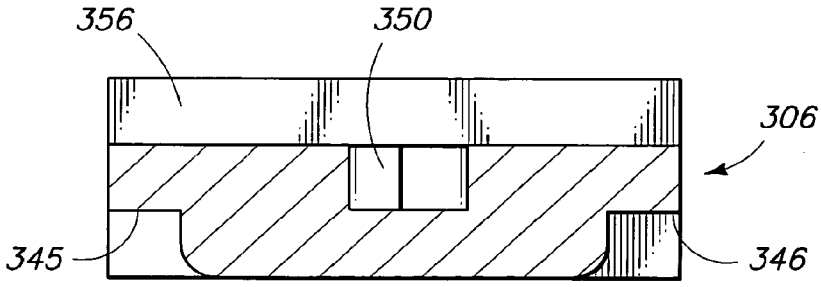
356
350
306
345
346

Fig 25

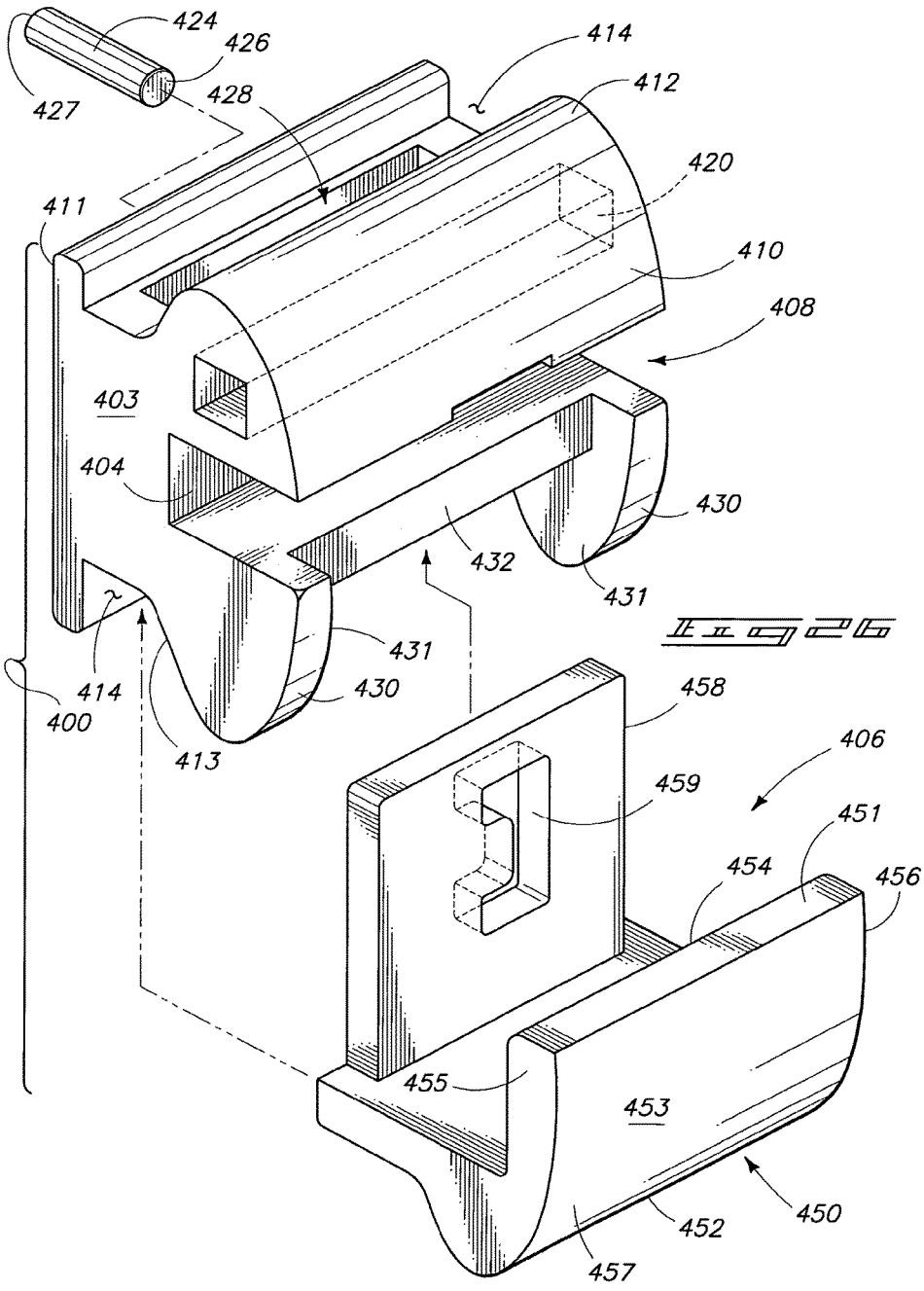
424
426
427
428
414
412
420
411
410
408
403
404
430
432
431
431
414
430
400
413
458
406
459
451
454
456
455
453
450
452
457

Fig 26

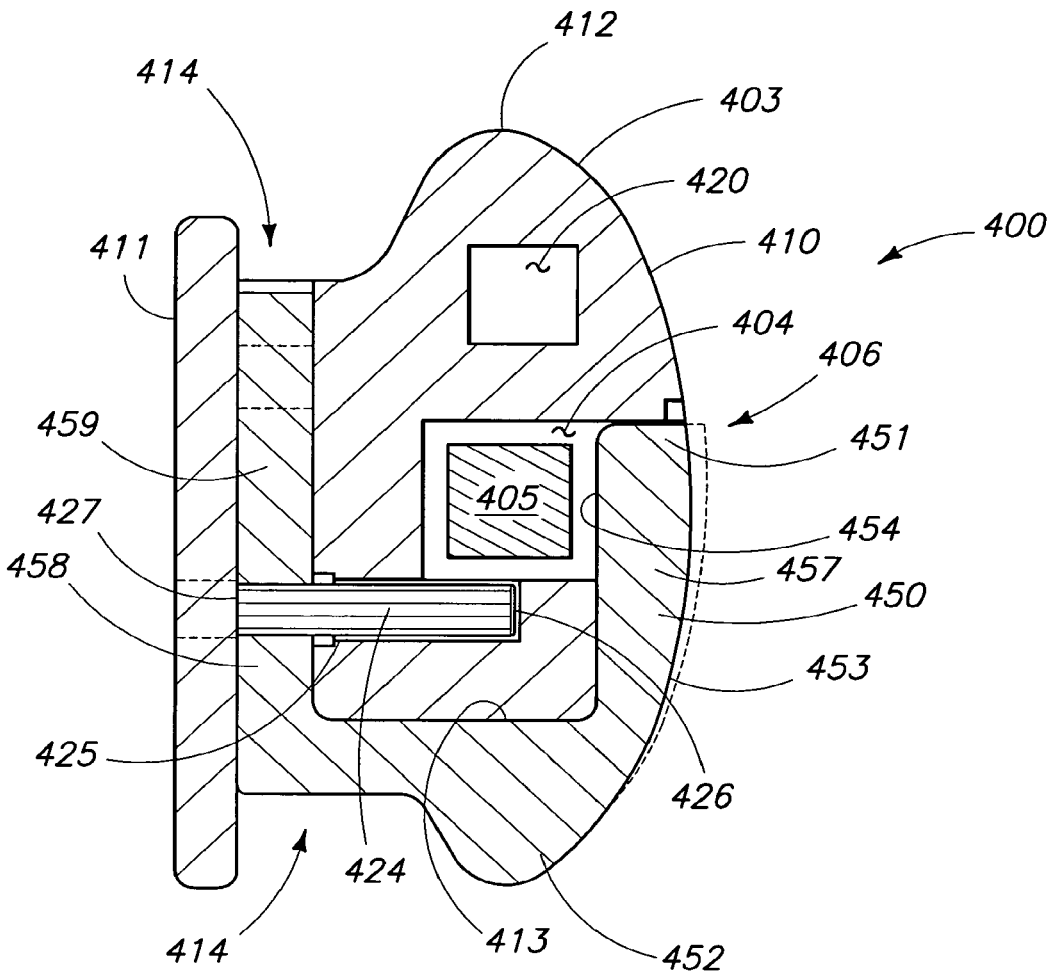
412
414
403
420
400
411
410
404
406
459
451
405
427
454
458
457
450
453
425
426
424
414
413
452

Fig. 27

ORTHODONTIC BRACKET

CROSS-REFERENCE TO RELATED APPLICATION

This application is a continuation of U.S. patent application Ser. No. 12/755,054 filed Apr. 6, 2010, which is a divisional of U.S. patent application Ser. No. 11/408,873 filed Apr. 19, 2006 (U.S. Pat. No. 7,704,072), and is related to U.S. patent application Ser. No. 14/968,065 filed Dec. 14, 2015, and U.S. patent application Ser. No. 14/971,012 filed Dec. 16, 2015, the disclosures of which are incorporated by reference herein in their entirety.

TECHNICAL FIELD

This disclosure pertains to an orthodontic bracket, and more specifically to biased ligating slides which are employed with same.

BACKGROUND OF THE INVENTION

Orthodontic brackets which are attached to the teeth of a patient, are designed to engage an archwire that exerts force upon the teeth to move the teeth into various clinically appropriate orientations. Such brackets typically include an archwire slot for reception of the archwire. Those skilled in the art will recognize that an archwire slot can have any desired cross-sectional configuration, or size, to match the size and shape requirements of the archwire or wires that are being received within the same slot.

Heretofore, many orthodontic brackets have been adhesively bonded to a tooth with the archwire slot being oriented in a substantially parallel orientation relative to the occlusal plane. However, those skilled in the art have long recognized that the archwire slot can also be angularly oriented across the bracket for certain clinical applications. Previously, orthodontic brackets have included various cleat-like extensions which have been referred to in the art as tie-wings or lugs. These structures project upwardly and downwardly, typically in pairs, at the top and bottom of the installed orthodontic bracket. In this regard, these extensions permit an archwire to be held within the archwire slot of the bracket by means of a twisted wire (a ligature) or an elastomeric o-ring which is releasably affixed by the respective lugs or tie-wings.

In U.S. Pat. No. 4,248,588 to Hanson, and which issued on Feb. 3, 1981, an orthodontic bracket, and archwire were disclosed and which included a moveable retainer member which, in one position, could be located in a position which facilitated access to the archwire slot, and in a second position, was useful for retaining the archwire within the archwire slot. Still further, this same reference disclosed a passageway **74** which is defined, at least in part, by the body of the bracket, and which is useful, in one embodiment, to pass a thin tie wire through, but which also was found advantageous, when fabricated in a rectangular cross-section, to receive a secondary archwire which could be employed to provide additional corrective forces to the tooth upon which the orthodontic bracket was attached.

In my U.S. Pat. No. 5,466,151, I disclosed a spring-locked orthodontic bracket having a ligating slide and which was acted upon by a biasing spring of various configurations which exerted an anteriorly outwardly biasing force thereagainst the moveable ligating gate in order to position or secure it in an appropriate orientation relative to the archwire slot.

In my U.S. Pat. No. 6,071,118, I disclosed a self-ligating orthodontic bracket having a transverse archwire slot and which further included a moveable, ligating slide which cooperated with the orthodontic bracket in order to achieve various benefits not possible, heretofore, in orthodontic brackets having a similar design.

In addition to the foregoing, the Carriere SLB orthodontic bracket which has recently been introduced by Class One Orthodontics includes a bracket body with a moveable cantilevered ligating slide. This orthodontic bracket further includes resilient members which form an integral portion of the ligating slide and which cooperate with the superior portion of the bracket body to releasably secure the ligating slide in a closed position. In this arrangement, the members forming an integral portion of the ligating slide exert a force on the ligating slide which is substantially coaxially aligned relative to the path of travel of the ligating slide. The resilient members otherwise do not support the distal end of the ligating slide when it is located in closed position over the archwire slot. Thus, the ligating slide remains cantilevered relative to the archwire slot.

While the brackets of the prior art have worked with varying degrees of success, assorted shortcomings have detracted from their usefulness. In particular, one of the chief difficulties with brackets having the designs as discussed, above, relates to the accurate manufacturing of same. Still further, another shortcoming attendant with such prior art devices relates to the dimensional size of such brackets. As should be understood, practitioners, as well as patients, have continually sought after smaller, and more inconspicuous brackets in order to acquire or achieve a more aesthetically acceptable appearance when the bracket has been installed in the mouth of a patient. As will be clear from reviewing the several earlier mentioned prior art references, the positioning of a biasing member within the bracket body in order to biasingly cooperate with the ligating gate has typically increased the dimensional size of the resulting bracket, and further increased the difficulty associated with fabricating and assembling orthodontic brackets of this type. Additionally, orthodontic bracket designs such as the Carriere SLB have additional shortcomings. For example, in brackets of this prior art design, if an archwire is not fully seated in the archwire slot, it becomes difficult if not impossible to fully engage the ligating slide with the bracket body thereby securing the ligating slide in the closed position over the archwire. More specifically, in a design such as seen in the Carriere SLB, and wherein the cantilevered ligating slide must releasably engage the base member in order to remain closed over the archwire slot, it will be readily apparent that an unseated archwire may deflect or deform the ligating slide sufficiently so that it may not effectively engage the base member, and therefore remain closed over the archwire. In this specific design, if the ligating slide does not effectively engage the base member, a clinician may cause the ligating slide to complete disengage from the base member with the result that the base member must now be removed from the patients tooth, and a new orthodontic bracket attached to the tooth to continue treatment. This is obviously a time consuming process for both the clinician as well as the patient.

An orthodontic bracket which avoids many of the shortcomings attendant with the prior art practices and orthodontic bracket designs utilized heretofore, is the subject matter of the present application.

SUMMARY OF THE INVENTION

A first aspect of the present invention relates to an orthodontic bracket which includes a ligating slide coupled

to a base member, and moveable along a path of travel relative thereto, and wherein a biasing member is borne by the ligating slide and cooperates with a portion of the base member to releasably position the ligating slide relative to the base member, and wherein the biasing member exerts a biasing force which acts in a direction which is substantially parallel to the path of travel.

Another aspect of the present invention relates to an orthodontic bracket which includes a base member defining an archwire slot having an opening, and at least one projection extending outwardly relative to the base member; a ligating slide moveably borne by the base member between a first position where the ligating slide is clear of the archwire slot, and a second position where the ligating slide projects over the opening of the archwire slot; and a biasing member borne by the ligating slide and slideably cooperating with the projection, and wherein the biasing member has a first portion which receives the projection when the ligating slide is in the first position, and a second portion which receives the projection when the ligating slide is in the second position.

Another aspect of the present invention relates to an orthodontic bracket which includes a base member defining a transverse archwire slot having an opening; a ligating slide borne by the base member and moveable along a path of travel relative to the archwire slot, and wherein the ligating slide is moveable between a first position where the ligating slide allows access to the archwire slot, and a second position, where the ligating slide projects over the opening, and restricts access to the archwire slot, and wherein a biasing member is mounted on the ligating slide and biasingly supports the ligating slide in at least one of the first or second positions, and wherein the biasing member exerts a biasing force in a direction relative to the base member which is substantially parallel and in non-coaxial alignment relative to the path of travel of the ligating slide.

Still further, another aspect of the present invention relates to an orthodontic bracket which includes a base member having a transverse archwire slot defining an opening, and at least one projection extending outwardly from the base member; a ligating slide moveable between a first position which is clear of the archwire slot, and a second position where the ligating slide projects over the opening of the archwire slot; and a substantially planar biasing member borne by the ligating slide and matingly cooperating with the projection, and wherein a first portion of the biasing member receives the projection when the ligating slide is in the first position, and a second portion of the biasing member receives the projection when the ligating slide is in the second position.

Another aspect of the present invention relates to an orthodontic bracket which includes a base member having a posterior facing surface, an anterior facing surface, and a projection extending outwardly from one of the posterior and/or anterior facing surfaces; and a ligating slide moveably borne by the base member along a path of travel, and further having a pair of members having opposing surfaces, and a channel defined therebetween the opposing surfaces, and wherein the pair of members resiliently cooperate with the projection to exert a biasing force on the ligating slide which is in substantially parallel spaced relation relative to the path of travel.

Yet another aspect of the present invention relates to an orthodontic bracket which includes a base member having a posterior facing surface, and an anterior facing surface, and wherein a projection extends outwardly from the posterior facing surface, and wherein the anterior facing surface of the base member defines, at least in part, an archwire slot having an opening; and a ligating slide is borne by the base member and is moveable between a first position, which allows access to the archwire slot through the opening, and a second position, which restricts access to the archwire slot through the opening, and wherein the ligating slide comprises a first portion extending to a second portion, and wherein the first portion forms, at least in part, a portion of the anterior facing surface of the base member, and the second portion is positioned in adjacent spaced relation relative to the posterior facing surface of the base member; and a resilient-biasing member is made integral with the second portion of the ligating slide and which resiliently cooperates with the projection.

Still further, another aspect of the present invention relates to an orthodontic bracket which includes a base member; an archwire slot traversing the base member, and wherein the archwire slot defines an opening within an anterior surface of the base member; a channel extending along the anterior surface of the base member from the archwire slot to a lowermost surface of the base member; a fixed projection extending laterally outwardly from the base member, and into a portion of the channel; a ligating slide which is slideably received in the channel; and a biasing member borne by the ligating slide and which resiliently cooperates with the fixed projection.

Still another aspect of the present invention relates to an orthodontic bracket which includes a ligating slide having a biasing member which is defined, in part, by a pair of members with opposing surfaces, and wherein the opposing surfaces define a channel therebetween, and wherein the members are spaced and resiliently moveable one relative to the other; and are operable to exert a biasing force on the ligating slide, and wherein the ligating slide is moveable along a path of travel, and the biasing force is substantially parallel and in spaced relation relative to the path of travel; and a biasing abutment is defined by one of the surfaces of one of the members, and wherein the biasing abutment at least partially occludes the channel.

Another aspect of the present invention relates to an orthodontic bracket which includes a base member having anterior and posterior facing surfaces, and further defining an archwire slot having an opening in the anterior facing surface; a ligating slide moveably borne by the base member, and which is moveable between a first position which is clear of the archwire slot, and a second position where the ligating slide projects over the archwire slot; and a biasing member borne by the base member and resiliently cooperating with the ligating slide, and wherein the biasing member exerts a biasing force which is directed posteriorly outwardly relative to the base member to position the ligating slide in the first and second positions.

Another aspect of the present invention relates to an orthodontic bracket which includes a base member defining an archwire slot; a ligating slide borne by the base member and moveable between a first, open position which allows access to the archwire slot, and a second, closed position which restricts access to the archwire slot, and wherein the ligating slide has an anterior and a posterior facing surface, and wherein a channel is formed in the posterior facing surface of the ligating slide; and an elongated flexible member is borne by the base member and which has a distal end which is received in the channel, and wherein the distal end is resiliently deformable along a substantially arcuately shaped path of travel, and wherein the flexible member cooperates with the channel to releasably secure the ligating slide in the first and second positions.

Yet still another aspect of the present invention relates to an orthodontic bracket which includes a base member defining an archwire slot; an elongated flexible member borne by the base member and which has a distal end which is moveable along an arcuately shaped path of travel; and a ligating slide moveably borne by the base member between a first position where the ligating slide is clear of the archwire slot, and a second position where the ligating slide restricts access to the archwire slot, and wherein the distal end of the elongated flexible member cooperates with the ligating slide and moves along the arcuately shaped path of travel as the ligating slide moves between the first and second positions.

A further aspect of the present invention relates to an orthodontic bracket which includes a base member having an anterior and posterior facing surfaces, and which further defines a transverse archwire slot having an opening; a ligating slide which is moveably borne by the base member between a first position, where the ligating slide is clear of the archwire slot, and a second position, where the ligating slide projects over the opening of the archwire slot, and wherein the ligating slide moves along a path of travel between the first and second positions; a resilient member borne by the base member and cooperating with the ligating slide to releasably restrain the ligating slide in the first and second positions, and wherein the resilient member is resiliently deformed, and moves along an arcuately shaped path of travel when the ligating slide moves between the first and second positions; a transverse passageway formed in the base member and disposed in spaced relation relative to the archwire slot; and an orthodontic appliance received, at least in part, in the transverse passageway and which facilitates passive self-ligation.

Yet still another aspect of the present invention relates to an orthodontic bracket which includes a base member defining an archwire slot, and which has anterior, posterior, superior and inferior facing surfaces, and where the base member defines a passageway which is located adjacent to the posterior facing surface and which extends therebetween the superior and inferior facing surfaces; an elongated flexible member borne by the base member and extending posteriorly outwardly relative to the base member and into the passageway, and wherein the elongated flexible member has a distal end which is moveable along an arcuately shaped path of travel; and a ligating slide which is received, at least in part, in the passageway, and which cooperates with the elongated flexible member, and wherein the ligating slide is moveable from a first position where the ligating slide is clear of the archwire slot, to a second position where the ligating slide restricts access to the archwire slot.

BRIEF DESCRIPTION OF THE DRAWINGS

Preferred embodiments of the invention are described below with reference to the following accompanying drawings.

FIG. **1** is a partial, greatly enlarged view of one form of the orthodontic bracket of the present invention, and where the invention is illustrated within a patient's mouth and having an archwire received in same, and further where the ligating slide is positioned so as to permit access to the archwire slot.

FIG. **2** is a partial, greatly enlarged view of one form of an orthodontic bracket of the present invention, and which shows the ligating slide associated with same in a position which restricts access to the archwire slot defined by the orthodontic bracket.

FIG. **3** is a greatly enlarged front elevation view of a first form of an orthodontic bracket of the present invention.

FIG. **3**A is a greatly enlarged front elevation view of a first form of an orthodontic bracket of the present invention, and which is utilized in combination with another orthodontic appliance.

FIG. **4** is a transverse, vertical, sectional view of one form of the orthodontic bracket of the present invention, and which is taken from a position along the line **4-4** of FIG. **3**.

FIG. **4**A is a transverse, vertical, sectional view of one form of the orthodontic bracket of the present invention, and which is taken from a position along the line **4**A-**4**A of FIG. **3**A.

FIG. **5** is a greatly enlarged, front elevation view of one form of an orthodontic bracket of the present invention, and which shows the ligating slide positioned so as to allow access to the archwire slot.

FIG. **6** is a fragmentary, front elevation view of a ligating slide which is useful in one form of the orthodontic bracket of the present invention.

FIG. **7** is a transverse, substantially horizontal, sectional view taken from a position along the line **7-7** of FIG. **6**.

FIG. **8** is a transverse, vertical, sectional view taken from a position along the line **8-8** of FIG. **6**.

FIG. **9** is a fragmentary, side-elevation view of a substantially planar biasing member which finds usefulness in one form of the orthodontic bracket of the present invention.

FIG. **10** is a perspective, exploded, front elevation view of the first form of the orthodontic bracket of the present invention, and with some underlying surfaces shown in phantom lines.

FIG. **11** is a front elevation view of a second form of an orthodontic bracket of the present invention.

FIG. **12** is a transverse, vertical, sectional view taken from a position along the line **12-12** of FIG. **11**.

FIG. **13** is a front elevation view of a second form of an orthodontic bracket of the present invention, and which shows a ligating slide associated with same and which is located in a first position which permits access to the archwire slot and which is defined by the orthodontic bracket.

FIG. **14** is a front elevation view of the ligating slide employed with the second form of the orthodontic bracket of the present invention.

FIG. **15** is a transverse, vertical, sectional view taken from a position along the line **15-15** of FIG. **14**.

FIG. **16** is a fragmentary, rear elevation view taken from a position along line **16-16** of FIG. **12**.

FIG. **17** is a perspective, exploded, front elevation view of the second form of the orthodontic bracket of the present invention.

FIG. **17**A is a perspective, exploded, front elevation view of yet another form of the orthodontic bracket of the present invention.

FIG. **18** is a transverse, vertical sectional view of a third form of the orthodontic bracket of the present invention.

FIG. **19** is a side elevation view of an orthodontic appliance employed with the various forms of the orthodontic bracket of the present invention.

FIG. **20** is a top plan view of one form of a biasing member which is useful in the third form of the orthodontic bracket of the present invention.

FIG. **21** is a perspective, exploded, front elevation view of fourth form of the orthodontic bracket of the present invention. Some underlying surfaces are shown in phantom lines.

FIG. **22** is a greatly enlarged, front elevation view of the fourth form of the orthodontic bracket of the present invention.

FIG. **23** is a transverse, vertical sectional view of the fourth form of the orthodontic bracket of the present invention, and which is taken from a position along line **23-23** of FIG. **22**.

FIG. **24** is a fragmentary, front elevation view of a ligating slide which is useful in the fourth form of the orthodontic bracket of the present invention.

FIG. **25** is a transverse, substantially horizontal, sectional view taken from a position along line **25-25** of FIG. **24**.

FIG. **26** is a perspective, exploded, front elevation view of a fifth form of the orthodontic bracket of the present invention.

FIG. **27** is a transverse, vertical sectional view of the fifth form of the orthodontic bracket as seen in FIG. **26**.

DETAILED DESCRIPTION OF THE PREFERRED EMBODIMENTS

This disclosure of the invention is submitted in furtherance of the constitutional purposes of the U.S. Patent Laws "to promote the progress of science and useful arts" (Article 1, Section 8).

First Embodiment

Five forms of a self-ligating orthodontic bracket are illustrated in the drawings. A first embodiment is shown in FIG. **1-10**; a second form is illustrated in FIGS. **11-17**; a third form is shown at FIG. **18**; a fourth form is shown in FIGS. **21-25**; and a fifth form is shown in FIGS. **26** and **27**, respectively. Other inventive aspects of the present invention such as a novel orthodontic appliance to be employed in the various forms of invention (FIG. **19**) are also shown in the various views, and will be discussed in greater detail in the paragraphs hereinafter.

The illustrated details of the orthodontic bracket of the present invention may be used in many different combinations within the scope of this disclosure. For this reason, the details of the illustrated orthodontic brackets, as described hereinafter, are intended to be interpreted as merely illustrative, and should not be taken as restrictive of the practical combinations of such features within the scope of this disclosure and the appended claims as provided for, hereinafter. When referring to the illustrated forms of the bracket assemblies, and their component parts, the front surfaces, that is, directed outwardly from a supporting tooth shall be referred to as the anterior surface. Conversely, its rear surfaces, that is, those facing toward the tooth shall be termed the posterior surfaces. Directions along a bracket assembly generally parallel to the incisal or occlusal line or plane shall be referred to as having width and/or being transverse. Conversely, perpendicular directions extending in generally upright orientations between the gingival line, and the incisal, or occlusal line shall be referred to as the height of the bracket assembly. The upright surfaces across the bracket shall be termed its side surfaces, and surfaces along the top and bottom of the bracket assembly shall be termed the incisal or occlusal surfaces or the gingival surfaces, respectively. When referring to the directions of movement of the ligating slide of the present orthodontic bracket the terms inferior and superior shall be used in an anatomical sense, that is, oriented in relation to a patient wearing the bracket. Thus, if a ligating slide is moved inferiorly, it will be moved in a downward direction. Conversely, if it is moved superiorly, it will be moved in an upward direction.

The archwire slot shown in the attached drawings are aligned transversely across each bracket in a direction which is usually parallel to the incisal or occlusal surfaces for general illustration purposes, only. However, the archwire slot across each bracket can be oriented in any desired angular configuration relative to its incisal or occlusal surfaces to affect a desired degree of tipping to a supporting tooth. In addition, the bracket can be oriented angularly relative to a supporting pad thereby providing an angular force to the archwire slot, and engaged archwire, when secured to a supporting tooth.

In order to properly fit upon the exterior surface of a selected tooth, the posterior surface, across the pad for each bracket, must be molded or otherwise formed to conform to the tooth with the archwire slot at the desired angular relationship to the archwire upon installation. Various placement angles can be provided on selected brackets by rotating the anterior surface contour across the pads of the brackets within a set. Alternatively, the archwire slots, and a set of brackets can be arranged in selected angles by rotating the position of the protruding elements of each bracket relative to a pad having a properly contoured posterior surface. The archwire slot is then formed in the protruding portion of the bracket to match the amount of tipping to be imparted to a given tooth. While the illustrated archwire slot in the various forms of the invention is shown in a perpendicular orientation relative to the anterior surface of the bracket, it could be formed in any desired angle relative to the anterior surfaces, depending upon the desired torquing to which the supporting tooth is to be subjected. The illustrative brackets, as shown herein, are designed to be bonded directly to a tooth at either the facial or lingual tooth surfaces.

The present bracket can be made from any suitable material including metals, plastics and ceramics, as well as a combination of such materials. The brackets, as shown herein, are typically fabricated out of metal, but the choice of materials is not critical to the understanding or the subsequent clinical use of the invention. The only limitation with regard to the chosen materials is the ability to efficiently fabricate or mold the bracket, and the accompanying ligating slide as structures which are capable of movement one relative to the other, and which are operable to engage the archwire during an orthodontic procedure.

Referring now to FIGS. **1-10**, a first form of an orthodontic bracket of the present invention is generally indicated by the numeral **10** therein. As seen more specifically in FIG. **1**, the orthodontic bracket **10** finds usefulness when used in an orthodontic procedure which affects a plurality of teeth **11** within a patient's mouth. As well known to those skilled in the art, each of the teeth **11** have an exterior facing surface **12** upon which a bracket body or base member **13** is typically affixed by using an appropriate adhesive. With reference to FIGS. **1** and **3**, it will be seen that the base member or bracket body **13** defines a substantially transversely disposed archwire slot **14** which extends thereacross, and which is further operable to receive a suitable archwire **15** therein. The archwire is illustrated in an appropriate, seated position within the archwire slot. It will be recognized, however, under some circumstances and particularly when the archwire is first installed, it may not be appropriately positioned within the archwire slot. The present invention, as will be described below, is operable to facilitate passive self-ligation of the archwire in a fashion not possible, heretofore. For example, during the treatment of a patient, orthodontic brackets occasionally detach from the underlying tooth. Further, teeth occasionally move following this detachment. If his occurs, the various forms of the

orthodontic bracket as will be disclosed, herein, can be reattached to the tooth at its correct position, and the archwire **15** may be reinserted into the archwire slot **14**, and the ligating slide closed, without the need to replacing the archwire **15** with a smaller dimensioned archwire which is now the accepted practice. This feature of the invention is facilitated by the resiliency of the ligating slide **16** which will be described in greater detail, hereinafter. Additionally, the present invention provides significant time savings for the treatment of a patient. In the first form of the invention, the base member further cooperates with a moveable ligating slide or gate **16**, which in one position as seen in FIG. **5**, allows access to the archwire slot **14**; and in FIG. **3** restricts access to the archwire slot **14**. The ligating slide cooperates with a substantially planar, resilient biasing member **17** as seen in FIGS. **3** and **9**, and which defines, at least in part, the course of movement for the ligating slide **16**. Therefore, in its broadest aspect, the present invention relates to an orthodontic bracket **10** which includes a ligating slide **16** which is configured to be coupled to a base **13**, and wherein the ligating slide **16** further cooperates with a biasing member **17** which receives a portion of the base member **13**.

Referring now to FIG. **4**, it will be seen that the bracket body or base member **13** has an anterior facing surface or side **20**, and an opposite posterior facing surface or side **21** which is adhesively affixed to the exterior surface **12** of a tooth **11** of a patient. The base member **13** further has a top, or superior facing surface or portion **22**, and an opposite, lower, or inferior surface or portion **23**. As seen in FIG. **4**, opposite transversely oriented channels **24** are defined in the superior and inferior facing surfaces and are further located therebetween the anterior and posterior facing surfaces **20** and **21**. These channels may be useful for securing various other dental appliances therein. More specifically, the superior portion **22** and inferior or lowermost portion **23** define substantially continuous upper and lower tie wing projections which can be employed in various orthodontic treatment regimens.

Referring still to FIG. **4** and FIG. **10** it will be seen that the bracket body or base member **13** has a transverse, substantially square or rectangular shaped passageway **30** formed in the superior portion **22** of the base member. As illustrated in FIG. **10**, it will be seen that the transverse passageway extends completely through the base member, and further is disposed in substantially parallel, spaced relation relative to the archwire slot **14**. As should be understood, if the archwire slot **14** is located in an orientation other than the transverse orientation as seen in FIGS. **1-10**, then this parallel orientation would not exist. However, it should be understood that the transverse passageway **30** may receive or cooperate with another secondary archwire; post; and/or other orthodontic appliances as will be described, hereinafter, and which may be useful in treating various tooth anomalies. In this regard, and referring now to FIGS. **3**, **5** and **19**, a novel orthodontic appliance in the form of a torquing assembly **31** is provided, and which matingly cooperates with the transverse passageway **30** in a manner so as to supply force of various amounts, and directions to the underlying tooth **11**. In this regard, the torquing assembly **31** has a first portion **32** having a substantially square or rectangular shape, and which is dimensioned to be telescopingly received within the transverse passageway **30**. Still further, the torquing assembly **31** has a second portion **33** which is attached to the first portion **32**, by means of an intermediate portion **32**A. The intermediate portion is longitudinally, resiliently deformable by means of the second portion **33**, and which may be rotated thereabout the first portion **32**, and then left in engagement with the archwire **15** as seen in FIG. **5**. In this fashion, the torquing assembly **31** can produce a force of a given magnitude, and direction, on the tooth of a patient in order to further enhance the usefulness of the present orthodontic bracket **10**. As seen further in FIG. **4**, and in the other views, the present orthodontic bracket **10** includes at least one post or projection **34** which extends outwardly relative to the base member **13**, and which further is received within a bore **35** which is formed in the base member **13** and near the inferior portion or surface **23**. In the present invention, the post or projection **34** is received, at least in part, in the bore **35**, and extends anteriorly outwardly relative to the base member **13**. Further, and as will be discussed in the second form of the invention as seen in FIG. **12**, the post or projection **124** extends posteriorly outwardly relative to the base member **103**. As should be understood, the projection **34** is herein depicted as being substantially cylindrical (FIG. **10**), and further the projection **34** has an exterior facing surface **36**. As will be discussed in greater detail hereinafter, the projection **34** cooperates with the ligating slide **16** in order to define, at least in part, a course of movement for the ligating slide. This feature of the invention will be discussed, below. As earlier noted, the base member **13** has an anterior facing surface or side **20**; and a posterior facing surface or side **21**. In the first and second forms of the invention as described herein, the bore **35** is sized so as to matingly receive and secure the projection **34**. In the assembly of the present invention, it should be understood that the projection **34/124** will be inserted in the bore **35/125** from the posterior facing surface or side **21** of the base member **13/103**, respectively. As will be recognized from a study of the drawings, in some forms of the invention, the bore **35** may extend through the base member **13** (FIG. **4**); but in a second form of the invention, the bore **125** may not extend through the base member **103**.

As seen in FIGS. **3** and **4**, a recess **37** is formed in the anterior facing surface **20** and adjacent the archwire slot **14**. This recess is useful for inserting a dental tool or other instrument therein in order to affect downward or inferior movement of the ligating slide **16** as will be discussed in greater detail hereinafter.

As best seen in FIGS. **3**A and **4**A, the present invention can accommodate a second novel orthodontic appliance in the form of a removable horizontal hook **38**, and which can be inserted into the passageway **30**, and which can cooperate with elastic bands or other appliances of various sorts in order to be employed in desired orthodontic treatment regimens. The removable horizontal hook has a rectangular shaped main body **39** which is dimensioned for mating receipt with the passageway **30**. The main body has a distal end **39**A which may be bent or otherwise deformed, as illustrated by phantom lines, in order to secure the removable hook within the passageway **30**.

As seen in FIG. **10**, the anterior facing surface **20** of the base member **13** defines a pair of spaced, substantially inwardly extending, guide members which are generally indicated by the numeral **40**. The guide members **40** have an exterior facing surface **41**, and an opposite, interior facing surface **42** which defines, at least in part, a generally vertically oriented ligating slide channel which is generally indicated by the numeral **43**. As illustrated in FIG. **10**, the projection **34** extends anteriorly outwardly from the base member **13**, and into this ligating slide channel **43** for purposes of cooperating with the ligating slide **16** which will be described below. As seen in FIG. **10**, the bracket body or

base member **13** defines an opening **44** which allows access to the archwire slot **14** when the ligating gate is in one of its two operational positions. As seen in the drawings, the archwire slot **14** communicates with the channel **43**. The operation of the ligating slide or gate **16** will be described in greater detail in the paragraphs which follow.

Referring now to FIGS. **3-7**, it will be seen that the first form of the orthodontic bracket **10** includes a ligating slide **16** which is slideably borne by the base member **13** and reciprocally moveable along a path of travel relative to the archwire slot **14** in the fashion which will be described, hereinafter. The ligating slide has a main body **50** having a first, superior end **51**; a second inferior end **52**; an anterior facing surface **53**; and an opposite, posterior facing surface **54**. As seen, most clearly in FIGS. **4** and **10**, the superior end **51** may be beveled or otherwise rounded so as to facilitate passive self-ligation of the archwire **15**. Still further, the main body includes a first, vertically disposed peripheral edge **55**; and a second, opposite vertically disposed peripheral edge **56** which is disposed in substantially parallel, spaced relation relative to the first peripheral edge **55**. As will be seen by reference to FIG. **10**, for example, the guide members **40**, and the lowermost portion **23** of the base member **13** shields, at least in part, a portion of each of the opposite peripheral edges **55** and **56**, respectively. As further seen by reference to FIG. **4**, for example, the ligating slide **16** is resiliently deformable, as seen by the phantom lines of the ligating slide, to a position which is anteriorly outward relative to the base member **13**. This resiliently deformable ligating slide **16** facilitates passive self-ligation of the archwire inasmuch as the archwire **15** need not be fully seated in the archwire slot **14**, for the orthodontic bracket **10** to be effectively used. The beveled and/or rounded superior end allows the ligating slide to move past the bracket body or base member **13** when moving from a displaced, biased position, as seen in phantom lines in the drawings to an unbiased orientation.

Referring now to FIGS. **3-8** and **10**, it will be seen that a first recessed region **60**, and a second recessed region **61** are formed in the anterior facing surface **53** of the ligating slide **16**, and adjacent to the first and second vertically disposed edges **55** and **56**, respectively. These first and second recessed regions **60** and **61**, respectively, each have a first end **62**, which is positioned adjacent to the first, superior end **51** of the main body; and a second end **63**, which is spaced therefrom, and oriented in spaced relation relative to the second inferior edge **52**. As seen in the drawings, the first and second recessed regions have a thickness dimension which facilitates the positioning of the recessed regions in the area therebetween the interior facing surface **42** of the respective guide members **40**, and the base member **13** so as to permit the selective slideable movement of the ligating slide **16** in the channel **43**. As should be understood, this physical arrangement prohibits force which might be occasioned by a patients chewing, for example, from adversely influencing the ligating slide **16**. As will be appreciated from a study of FIGS. **7** and **8**, a cavity **70**, of predetermined dimensions, is formed in the posterior facing surface **54** of the main body **50**, and is operable to receive the planar resilient biasing member **17** which will be discussed in greater detail, below. The cavity **70** has an open, first or superior end **71** (FIG. **8**), and an opposite, closed, second or inferior end **72**. The cavity has a depth dimension which is greater than or equal to the thickness dimension of the substantially planar, resilient biasing member **17**. Still further, the posterior facing surface **54** defines an abutting edge **73** which is operable to limit the movement of the ligating slide **16** along the course or path of travel **74** (FIG. **3**). In this regard, the course of travel **74** is defined between a first position **75** where the ligating slide allows access to the archwire slot (this is best seen in FIG. **5**); and a second position **76** where the ligating slide **16** projects in a cantilevered fashion, at least in part, over the opening **44** and, at least partially restricts access to the archwire slot **14** (FIG. **3**). As earlier discussed, in other possible forms of the invention, the superior end **51** of the ligating slide may partially overlap and even releasably cooperate with the base member **13** to achieve the benefits provided by the present invention. In the arrangement as seen in the drawings, and as will be discussed below, the ligating slide **16** is biasingly supported in at least one of the first or second positions **75** and **76** respectively. As will become more apparent from the discussion which follows, the biasing force applied to the ligating slide **16** to support it in one of the first or second positions **75** and **76**, acts in a direction which is substantially parallel to the path of travel **74** of the ligating slide **16**. This is contrary to the prior art devices used heretofore, and wherein prior art biasing assemblies typically provided a biasing force which was directed anteriorly outwardly and in a direction which is generally normal to the ligating slide. As will be appreciated by a study of FIG. **4**, the first superior end, or edge **51** may be disposed in juxtaposed abutting relation relative to the base member **13** when the ligating slide **16** is in the second position **76**. In other possible forms of the invention, the same superior end or edge **51** may partially abut the base member **13**; or as discussed above, partially overlay the base member **13**. In still other arrangements, the superior end or edge **51** may releasably engage or otherwise cooperate with the base member when disposed in the second position where the ligating slide **16** extends over the archwire slot **14**. In still other forms of the invention as seen in the drawings, the superior end **51** may be beveled and/or rounded so as to facilitate passive self-ligation. This feature is common to the several exemplary forms of the invention as seen in the drawings.

Referring now to FIGS. **3-10**, it will be seen that the orthodontic bracket **10** of the present invention includes a substantially planar resilient biasing member **17** which is borne by the ligating slide **16**, and which slideably cooperates with the projection **34** to biasingly support the ligating slide **16** in at least one of the first or second positions **75** and **76**, respectively. In this regard, the resilient member **80** has a substantially planar main body **80** which is positioned in a generally parallel, spaced relationship relative to the anterior facing surface **53** of the ligating slide **16**. As seen in the drawings, the substantially planar main body **80** is received within the cavity **70** which is defined by the ligating slide, and is oriented in a fashion so as to resiliently cooperate with the projection **34** which extends anteriorly outwardly relative to the base member **13**. As illustrated, it will be appreciated that the resilient biasing member provides a resilient or biasing force which acts in a perpendicular or radial direction relative to the projection **34**, and substantially parallel relative to the path of movement of the ligating slide **16**. In this regard, and as seen in FIG. **9**, the planar main body includes a transverse portion **81** which has a first end **82**, and an opposite second end **83**. The transverse portion **81** has a length dimension which is less than about the width dimension of the cavity **70** thereby allowing the main body **80** to be securely received within the cavity **70**. Still further, the main body **80** includes first and second dependent, and resiliently moveable members **84** and **85**, respectively. The respective depending members extend substantially normally, downwardly relative to the trans-

verse portion **81**. Still further, each of the depending members has a distal end **90**; an outwardly facing edge **91**; and an inwardly facing edge **92**. The inwardly facing edges are disposed in predetermined, spaced relation one relative to the other. As seen in FIG. **9**, a channel **93** is defined therebetween the inwardly facing edges **92**. Still further, a portion of the inwardly facing edges **92**, each define, at least in part, an inwardly facing biasing abutment **94** which mechanically and slideably cooperates or otherwise engages the projection **34** in order to bias the ligating slide **16** in one of the first or second positions **75** and **76**, respectively. As understood from the drawings, the transverse portion **81** cooperates with the projection **34** to limit downward movement of the ligating slide **16**, and to prevent the ligating slide from disengaging from the base portion **13** when the ligating slide is in the first position **75**. As currently arranged, the respective biasing abutments **94** are operable to bias or otherwise releasably support the ligating slide **16** into the second position **76**, which as seen in FIG. **3**, substantially restricts access to the archwire slot **14** and thereby captures the archwire **15** therein. As seen in FIG. **9**, the channel **93** has a first portion **95**; and a second portion **96**. The first and second portions of the channel **93** are located on the opposite sides of the respective biasing abutments **94**. As seen, the respective biasing abutments are disposed in such an orientation so as to occlude, at least in part, or otherwise narrowly restrict, the channel **93**. As seen therefore, the resilient or biasing member **17** has a first portion **95** of the channel **93** which receives the projection **34** when the ligating slide is in the first position **75**; and a second portion of the channel **96** which receives the projection **34** when the ligating slide is in the second position **76**. Therefore, the pair of members **84** and **85** resiliently cooperate with the outwardly or exterior facing surface **36** of the projection **34** to appropriately position and releasably restrain the ligating slide **16** in either of the first or second positions **75** and **76**, respectively. The projection **34** passes along the channel when a clinician exerts sufficient force on the ligating slide **16** by means of an instrument, not shown, so as to cause projection **34** to biasingly move the members **84** and **85** apart so as to permit the projection **34** to pass along the passageway **93** to the appropriate location. As seen in FIGS. **3** and **5**, for example, the projection **34** is operable to move along the channel **93** and between the first and second portions **95** and **96** thereof, to appropriately position the ligating gate **16** as described earlier. This arrangement is particularly advantageous inasmuch as the overall thickness dimension of the resulting first form of the orthodontic bracket **10** can be reduced thereby making the bracket more aesthetically appealing, and easier to fabricate. In addition to the foregoing, and in another possible form of the invention, it should be understood that the biasing member **80** may be made integral with the ligating slide **16**. More specifically, the members **84** and **85** may be integrally molded with the ligating slide so as to provide the benefits discussed above.

Second Embodiment

The second embodiment of the orthodontic bracket of the present invention is generally indicated by the numeral **100** and is best seen by reference to FIGS. **11-17**A, respectively. As seen therein, the second embodiment of the orthodontic bracket **100** is defined by a bracket body or base member **103** and which further defines a transversely disposed archwire slot **104** which is operable to receive an archwire **105** of traditional design. As earlier discussed, the archwire slot is shown in a transverse orientation relative to the bracket body or base member **103**, however, it will be appreciated that the archwire slot **104** may be oriented in various orientations to achieve various clinical benefits for a patient. As seen in the drawings, the archwire slot **104** is substantially rectangular in shape, and is operable to receive a rectangular shaped archwire **105** of conventional design. The orthodontic bracket **100** includes a ligating slide **106** which moveably cooperates with the base member **103**, and is moveable along a path of travel from a first position which allows access to the archwire slot **105** through the opening **108**, and a second position where the moveable ligating slide **106** prevents access to the archwire slot. It will be appreciated by a study of FIG. **12** that the ligating slide **106** is resiliently deformable so as to facilitate passive self-ligation and the proper seating of the archwire **105** in the archwire slot **104**. As should be understood, the present resiliently deformable ligating slide **106** may be sufficiently deformed such that it may close over an archwire **105** which may be slightly protruding from the archwire slot **104**. Over time, however, the ligating slide **108** will assume its original shape to confine or otherwise enclose the archwire **105** within the archwire slot in the manner of passive self ligation, as earlier discussed. As seen by reference to FIG. **17**, a planar resilient biasing member **107** is made integral with the moveable ligating slide and which is operable to biasingly position the moveable ligating slide **106** in one of the aforementioned positions relative to the archwire slot **104**. As seen by reference to FIG. **12** and following, the base member **103** has an anterior facing surface or side **110**, and an opposite posterior facing surface or side **111** which may be adhesively affixed, at least in part, to an underlying tooth of a patient who is being treated. Still further, the base member **103** has a top or superior facing surface **112**, and a bottom or inferior facing surface **113**. As seen in FIG. **12**, the base member **103**, and a portion of the moveable ligating slide **106** define individually elongated channels **114** which may be utilized to engage other orthodontic appliances as is customary for the treatment of a patient. The base member and ligating slide each respectively define a substantially continuous tie wing.

As seen in FIGS. **11** and **12**, for example, and similar to the first form of the invention **10**, a transverse substantially rectangular cross-sectioned passageway **120** is formed in the base member **103**, and disposed in substantially parallel spaced relation relative to the archwire slot **104**. As earlier disclosed, this transverse passageway **120** may receive other orthodontic appliances, such as a secondary archwire, or further may utilize a novel torquing spring or assembly **121** which is similar to that earlier disclosed, and which was described by reference to FIG. **19**. In this regard, the torquing assembly **121** has a first portion **122** having a rectangular shape and which is dimensioned to be matingly received in the transverse passageway **120**; and a second portion **123** which is attached to the first portion by an intermediate portion **122**A. The intermediate portion is longitudinally, resiliently deformable by means of the second portion **123**, and which can be rotated in a given direction, and thereafter forcibly engage the archwire **123** as seen in FIG. **13** in order to provide a torquing force on same to facilitate the movement of a tooth in a given direction. As seen in the drawings, the second form of the orthodontic bracket **100** includes a projection **124** (FIG. **12**) which is received in a bore **125**, and which extends generally posteriorly outwardly relative to the base member **103**. The projection **124** has an exterior facing surface **126** which cooperates with the resilient biasing member **107** in order to achieve the benefits which will be discussed in greater detail hereinafter. As seen in FIG. **12**, the bore **125** does not extend through the base member **103**. Further, and when assembling

the second form of the invention, it should be clear from a study of FIG. **12** that the projection **124** is inserted in the bore **125** from the posterior facing surface or side **11** of the base member **103**. As seen by reference to FIGS. **12** and **17**, respectively, the base member **103** further defines a substantially vertically oriented passageway **127** which slideably receives a portion of the moveable ligating slide **106**, as will be discussed in greater detail, hereinafter. The vertically oriented passageway **127** has a first end **128**, which is adjacent to the superior side of the base member **103**, and a second end **129** which is adjacent to the inferior side of the orthodontic bracket **100**. As seen by reference to FIG. **12**, the projection **124** extends into and partially occludes the vertically oriented passageway **127**. The operation of the passageway, in combination with the moveable ligating slide **107**, will be discussed in greater detail, hereinafter.

As best seen by reference to FIGS. **17** and **17**A, the base member **103** includes a pair of anteriorly extending guide members **130** which are positioned in predetermined substantially parallel spaced relation one relative to the other. The guide members **130** are operable to cooperate with the ligating slide **106** as will be described below. Each of the guide members have an inwardly facing surface **131** which defines a passageway **132** therebetween, and which slideably receives a portion of the ligating slide **106**. Referring now to FIG. **17** and similar to the first form of the invention **10**, the guide members each have a portion **134** which is operable to slideably restrain, and otherwise shield, at least in part, the ligating slide **106**. This structural element is eliminated in the form of the invention as seen in FIG. **17**A. As seen in FIGS. **17** and **17**A, for example, the ligating slide **106** has a main body **150** having a first superior end **151**, and an opposite second inferior end **152**. The main body further has an anterior facing surface **153**, and an opposite posterior facing surface **154**. As seen in FIG. **12**, a portion of the posterior facing surface **154** defines, in part, the archwire slot when the ligating slide is positioned in covering relation relative to the archwire slot to restrict access to same. The main body **150** has opposite substantially vertically disposed edges **155** and **156**, respectively. Still further, the main body has a first portion **157** which forms, at least in part, a portion of the anterior facing surface **153** of the base member **103**; and further, a second portion **158** is positioned in adjacent spaced relation relative to the posterior facing surface **111** of the base member. As seen in FIGS. **17** and **17**A, the second portion **158** of the ligating slide **106** is disposed in spaced relation relative to the posterior facing surface **154**. Still further, the second portion **158** is dimensioned, in length, thickness and width, to be slideably received within the vertically oriented passageway **127** which is defined by the base member **103**. The second portion **158** of the ligating slide has integrally formed therewith, the planar resilient biasing member **107** as will be described in greater detail, hereinafter. As with the first form of the invention **10**, the resilient biasing member **107** defines a course of movement for the accompanying ligating slide **106** for the purposes which will be described below. As seen in FIGS. **14** and **17**, the ligating slide **106** further defines first and second recessed regions **159**A and B, respectively. As illustrated, these recessed regions have a thickness dimension which allows the ligating slide to be slideably received therebetween the portions **134** and base member **103** so as to facilitate the reciprocal sliding movement of the ligating slide **106**, as described below. As best see by reference to FIG. **17**A, an alternative second form of the invention is shown. In this regard, it will be seen that the ligating slide has been modified to eliminate the recessed regions **159**A and B, respectively. Further, and as noted above, the guide members **130** have been modified to eliminate the structural element **134**, (FIG. **17**) which was operable in the previous form of the invention, to restrain the movement of the ligating slide **106**.

Referring now, for example, to FIGS. **17** and **17**A, it will be understood that the second form of the orthodontic bracket **100** includes a substantially planar resilient biasing member **107** which is made integral with the second portion **158** of the ligating slide **106**, and which further resiliently cooperates, and receives, the projection **124** which extends posteriorly, rearwardly, and into the passageway **127** which is defined by the base member **103**. Similar to the resilient biasing member **80** as described with the first form of the invention **10**, the resilient biasing member **107** has a main body **160** which has a transverse portion **161**. The transverse portion has opposite first and second ends **162** and **163** which are made integral with the second portion **158** of the ligating slide **106**. The main body of the planar resilient biasing member **160** further includes first and second depending members **164** and **165** which are each disposed in predetermined, spaced relation one relative to the other. Each of the depending members **164** and **165** have a distal end **170**, and have an outwardly facing edge **171**, and an opposite, inwardly facing edge **172** which defines a channel **173**, therebetween. As seen in the drawings, a portion of each of the inwardly facing surfaces define a biasing abutment **174** which occludes, at least in part, the channel **173**. In this regard, the channel **173** is defined by a first portion **175** which, when the projection **124** is received therein, positions the ligating slide in a position whereby a practitioner can gain access to the archwire slot **104**, and a second portion **176**, whereby the resilient biasing members resiliently secures the ligating slide **106** in a substantially closed position thereby restricting access to the archwire slot **104** and capturing the archwire **105** therein. This is seen by a study of FIGS. **11** and **13**, respectively. As seen in FIG. **16**, the first and second depending legs are resiliently moveable laterally outwardly, one relative to the other to allow for the passage of the projection **124** therethrough, thereby locating the projection **124** in either the first or second portions **175** and **176** of the channel **173**. As seen from a study of FIGS. **11** and **13**, the ligating slide **106** is moveable along a course of travel or movement **180**, between a first position **181**, where the ligating slide **106** allows access to the archwire slot **104** (FIG. **13**), and wherein the projection **124** is in engagement thereagainst the transverse portion **161**; and a second position **182**, and where the ligating slide **106** projects over the opening **108** and restricts access to the archwire slot **104** (FIG. **11**). In this arrangement, the ligating slide **106** is biasingly supported in at least one of the first or second positions by the planar biasing member **107**. As seen by reference to FIGS. **11** and **13**, the first portion **175** of the channel **173** receives the projection **124** when the ligating slide is in the first position **181** (FIG. **13**), and the second portion **176** receives the projection **124** when the ligating slide **106** is in the second position **182**. As similarly described with respect to the first form of the invention, the biasing force applied to the biasing member **107** is substantially perpendicular relative to the projection **124** and substantially parallel to the path of movement **180** of the ligating slide **106**.

Third Embodiment

The third embodiment of the orthodontic bracket of the present invention is generally indicated by the numeral **200**, and is best seen by reference to FIG. **18**. As seen therein, the third embodiment of the orthodontic bracket **200** is defined

by a bracket body or base member **203** and which further defines a transversely disposed archwire slot **204** which is operable to receive an archwire **205** of traditional design. As earlier discussed with respect to the first and second forms of the invention, the archwire slot **204** is shown in a transverse orientation relative to the bracket body or base member **203**, however, it will be appreciated that the archwire slot **204** may be located in various orientations to achieve assorted clinical benefits for a patient. As seen in FIG. **18**, the archwire slot **204** is substantially rectangular and is operable to receive a rectangular shaped archwire **205** of conventional design. The orthodontic bracket **200** further includes a ligating slide **206** which moveably cooperates with the base member **203**, and is moveable along a path of travel from a first position which allows access to the archwire slot **204** through an opening **208**, and a second position, where the moveable ligating slide **206** prevents access to the archwire slot. Similar to that described with respect to the forms of the invention which were earlier described, it will be understood that the ligating slide **206** is resiliently deformable so as to facilitate passive self-ligation, and the proper seating of the archwire **205** in the archwire slot **204**, if necessary. The ligating slide is shown in phantom view in order to illustrate the relative resiliency and movement of the ligating slide relative to the bracket body or base member **203**. As seen in FIGS. **18** and **20**, the third embodiment or form of the invention **200** includes a biasing member **207** which is borne by the base member **203**, and which resiliently cooperates with a portion of the ligating slide **206**. As seen in FIG. **18**, the biasing member **207** exerts a biasing force which is directed posteriorly outwardly relative to the base member **203** to position the ligating slide **206** in the opposite first and second positions which are shown, alternatively, in solid as well as in phantom lines. As will be recognized from a study of FIG. **18**, the biasing member **207** is carried by, or otherwise positioned, mounted, or received within a portion of the base member **203** as will be described in further detail below. The biasing member **207** is operable to releasably biasingly position the moveable ligating slide **206** in one of the aforementioned positions relative to the archwire slot **204**. As seen in FIG. **18**, the base member **203** has an anterior facing surface or side **210**; and an opposite posterior facing surface or side **211** which may be adhesively affixed, at least in part, to an underlying tooth of a patient who is being treated. Still further, the base member **203** has a top or superior facing surface or portion **212**, and a bottom, lowermost or inferior facing surface **213**. Similar to that described with the first and second forms of the invention, the base member as well as the moveable ligating slide **206** define individual elongated channels **214** which may be utilized to engage other orthodontic appliances as is customary for the treatment of a patient. As earlier described, this arrangement results in an orthodontic bracket which has substantially continuous superior and inferior tie wings.

As seen in FIG. **18**, and similar to the earlier forms of the invention, a transverse, substantially rectangular cross-sectional passageway **220** is formed in the base member **203** and disposed in substantially parallel, spaced relation relative to the archwire slot **204**. This transverse passageway **220** may receive other orthodontic appliances such as a secondary archwire, or further may utilize a novel torquing spring assembly such as what is seen in FIG. **19** and which was earlier described with respect to the first and second forms of the invention. As seen in FIGS. **18** and **20**, and as discussed briefly above, the second form of the invention **200** includes a biasing member **207** which exerts a biasing force which is directed generally posteriorly outwardly relative to the base member **203** to position the ligating slide **206** in the first and second positions, as described earlier. In this regard, the biasing member **207** is carried or otherwise positioned or mounted on the base member **203** and is typically received within a cavity **221** that is formed therein. As seen from FIG. **18** it will be understood that the cavity **221** does not extend through the base member. Further, it should be appreciated that the biasing member **207** can take on a number of configurations. Some possible configurations are those which are illustrated in U.S. Pat. No. 5,466,151, the teachings of which are incorporated by reference herein. One possible form of the biasing member is seen in FIG. **20** where the biasing member is illustrated as a deformable, resilient o-ring which is fabricated of a metal and/or composite and which is received in the cavity **221**. As will be appreciated, force applied to the o-ring causes it to resiliently deform so as to permit the movement of the ligating slide **206**. As further seen by reference to FIG. **18**, the base member **203** further defines a substantially vertically oriented passageway **222** which slideably receives a portion of the moveable ligating slide **206** as will be discussed below. The vertically oriented passageway **222** has a first end **223** which is adjacent to the superior side of the base member **203**, and a second end **224** which is adjacent to the inferior side of the orthodontic bracket **200**. As illustrated in FIG. **19**, the biasing member **207** extends into and partially occludes the vertically oriented passageway **222**. The operation of this passageway in combination with the moveable ligating slide **206** will be discussed in greater detail, below.

As seen in FIG. **18**, the ligating slide **206** has a main body **230** having a first superior end **231**, and an opposite inferior end **232**. The main body further has an anterior facing surface **233**; and an opposite posterior facing surface **234**. In the drawing, it will be seen that a portion of the posterior facing surface defines, at least in part, the archwire slot **204** when the ligating slide **206** is positioned in covering relation relative to the archwire slot or opening **208** to restrict access to same. In addition to the foregoing, the main body **230** defines a first portion **237** which forms, at least in part, a portion of the anterior facing surface **233** of the base member **203**; and further a second portion **238** which is positioned in adjacent spaced relation relative to the posterior facing surface **211** of the base member **203**. As seen in FIG. **18**, the second portion **238** of the ligating slide **206** is disposed in spaced relation relative to the anterior facing surface **233** and the first portion **237**. Still further, the second portion **238** is dimensioned in length, thickness, and width so as to be slideably received within the vertically oriented passageway **222** which is defined by the base member **203**. As seen in the present drawing, the second portion **238** has formed therein a plurality of detents, cavities or receiving regions **239** and which receive or otherwise cooperate with a portion of the biasing member **207** so as to releasably position the ligating slide **206** in the first and second positions, as will be discussed below.

As seen from a study of FIG. **18**, the ligating slide **206** is moveable along a course of travel **240**, from a first position **241** and wherein the biasing member **207** is received, at least in part, and cooperates with one of the detents, cavities, or receiving regions **239**, and wherein the ligating slide (phantom lines) and more specifically the first portion **237** thereof allows access to the archwire slot **204**; and a second position **242** (solid lines) and wherein the ligating slide **206** and more specifically the first portion thereof projects over the opening **208** and otherwise substantially restricts access to the archwire slot **204**. In the second position **242**, again the

biasing member **207** is received in one of the detent or receiving regions **239** in order to releasably secure the ligating slide **206** in the appropriate position. To move the ligating slide between the second and first positions, a clinician would merely insert an instrument in the passageway **222** and more specifically at the first end **223** thereof and press downwardly on the second portion **238** of the ligating slide **206** which is slideably received within the passageway **222**.

Therefore in the third form of the invention, an orthodontic bracket **200** is described and which includes a base member **203** having anterior and posterior facing surfaces **210** and **211**, respectively and further defining an archwire slot **204** having an opening **208** in the anterior facing surface **210**. Still further, in this third form of the invention, a ligating slide **206** is movably borne by the base member **203** between a first position **241** which is clear of the archwire slot **204**; and a second position **242**, where the ligating slide **206** projects over the archwire slot. Still further, a biasing member **207** is provided, and which is borne by the base member **203**, and which resiliently cooperates with the ligating slide **206**. As illustrated, the biasing member **207** exerts a biasing force which is directed posteriorly outwardly relative to the base member **203** to position the ligating slide in the first and second positions **241** and **242**, respectively. As earlier noted, a cavity **221** is formed in the base member **203** and which receives, at least in part, the biasing member **207**. As with the other several forms of the invention as earlier described, the first portion **237** of the ligating slide **206** is resiliently deformable so as to further facilitate passive self-ligation if necessary.

Fourth Embodiment

The fourth embodiment of the orthodontic bracket of the present invention is generally indicated by the numeral **300**, and is best understood by a study of FIGS. **21-25**, respectively. As seen therein, the third embodiment of the orthodontic bracket **300** is defined by a bracket body or base member **303** and which further defines a transversely disposed archwire slot **304** which is operable to receive an archwire **305** of traditional design. As discussed with respect to the first, second and third forms of the invention, the archwire slot is shown in a transverse orientation relative to the bracket body or base member **303**. It will be appreciated, however, that the archwire slot **305** may be oriented in various orientations to achieve assorted clinical benefits for a patient. As will be appreciated from a study of FIG. **23**, the archwire slot **304** is substantially rectangularly shaped and is operable to receive a rectangular or square shaped archwire **305** of conventional design. The orthodontic bracket **300** further includes a ligating slide **306** which moveably cooperates with the base member **303**, and is moveable along a path of travel from a first position which allows access to the archwire slot **304** through an opening **308**; and a second position, where the moveable ligating slide **306** prevents access to the same archwire slot. Similar to that described with respect to the other forms of the invention, it will be understood that the ligating slide **306** is resiliently deformable so as to facilitate passive self-ligation and the proper seating of the archwire **305** in the archwire slot **304**, if necessary. As seen in FIG. **23**, the ligating slide is shown in phantom view in order to illustrate the relative resiliency and movement of the ligating slide relative to the bracket body or base member **303**.

As best seen by reference to FIG. **21**, the base member **303** has an anterior facing surface or side **310**, and an opposite posterior facing surface or side **311**. The posterior facing surface may be adhesively affixed, at least in part, to an underlying tooth of a patient who is being treated. Still further, the base member **303** has a top or superior facing surface or portion **312**, and a bottom, lowermost or inferior facing surface **313**. Similar to that described with respect to the first, second and third forms of the invention, the base member **303** as well as the moveable ligating slide **306** define individually elongated channels **314** which may be utilized to engage other orthodontic appliances as is customary for the treatment of a patient. As earlier described, this arrangement results in an orthodontic bracket which has substantially continuous superior and inferior tie-wings.

As seen in FIG. **21** and following, and similar to the earlier forms of the invention, a transverse, substantially rectangular cross-sectional shaped passageway **320** is formed in the base member **303** and is disposed in substantially parallel spaced relation relative to the archwire slot **304**. This transverse passageway **320** may receive other orthodontic appliances such as secondary archwire or further may utilize a novel torquing spring assembly as was previously described with respect to FIG. **19**; or a hook as seen in FIG. **3A** and which is generally designated by the numeral **38**.

As seen in FIG. **21** and following, it should be understood, that a bore **321** is formed in the base member **303**, and more specifically in the lowermost or inferior surface **313** thereof. The elongated bore has a first end **322** which is located adjacent to the posterior facing surface **311** of the base member **303**; and further has a second end **323** which is located adjacent to the anterior facing surface **310** as seen most easily by reference to FIG. **21**. As best understood by reference to FIG. **23**, it should be understood that the bore has a diametral dimension which generally increases when measured from the posterior facing surface **311** in the direction of the anterior facing surface **310**. More specifically, and as seen in FIG. **23**, it will be recognized, that the inside diametral dimension, at the second end **323**, is greater than the outside diametral dimension of an elongated flexible projection or member **324** which is received in same. This relationship allows the elongated flexible projection or member **324** to move relative to the bore. This will be discussed in greater detail below.

As seen in FIG. **23**, it will be appreciated that the fourth form of the invention **300** includes an elongated flexible projection or member **324** which has a proximal end **325** which is located near and otherwise affixed to the posterior facing surface **311** of the base member **303**. Still further, the flexible projection or member **324** has a distal end **326** which extends anteriorly, outwardly relative to the anterior facing surface **310** of the base member **303**. As illustrated most clearly to reference to FIG. **21**, the distal end **326** is operable to move along an arcuately shaped path of travel **327** when the ligating slide **306** moves between the first open position where the ligating slide **306** is clear of the archwire slot **304**; and the second position where the ligating slide restricts access or otherwise projects over the archwire slot. Therefore, in one aspect of the present invention, an orthodontic bracket **300** is disclosed and which includes a base member **303** defining an archwire slot **304**; and an elongated flexible member **324** is borne by the base member and which has a distal end **326** which is moveable along an arcuately shaped path of travel **327**. Still further in this form of the invention, a ligating slide **306** is moveably borne by the base member **303** between a first position where the ligating slide is clear of the archwire slot **304**; and a second position where the ligating slide restricts access to the archwire slot. In this regard, the distal end **326** of the elongated flexible member **324** cooperates with the ligating slide **306** and moves along

the arcuately shaped path of travel as the ligating slide moves between the first and second positions. As will be appreciated from a study of the drawings, the arcuately shaped path of travel **327** (which is greatly exaggerated to reveal this feature of the invention) is generally parallel to the anterior facing surface **310** of the base member **303**. In view of the arrangement of the bore **321**, as earlier described, the arcuately shaped path of travel **327** of the distal end **326** is generally facilitated. However, it should be understood that the flexible member **324** as herein described is not deformable or compressible in a longitudinal direction as was previous prior art assemblies. Rather, as seen in the drawings, the flexible member merely is operable to allow the distal end **326** thereof to move along the arcuately shaped path of travel for the benefits that will be described hereinafter. As illustrated most clearly by reference to FIG. **21**, the base member has a lowermost portion **328** which defines a channel **329** which extends from the archwire slot **304** to the lowermost portion. As seen in the drawings, and as appreciated from the various views, the ligating slide **306** is slideably received in the channel defined by the base member, and the elongated flexible projection or member **324** defines the path of travel for the ligating slide as it moves between the first open position which is clear of the archwire slot, to the second position where the ligating slide **306** projects over the archwire slot and restricts access to same.

As best illustrated by reference to FIG. **21**, the ligating slide **306** has a main body **340** having a first superior end **341**, and an opposite inferior end **342**. The main body further has an anterior facing surface **343** and an opposite posterior facing surface **344**. In the drawings as provided, it will be seen that a portion of the posterior facing surface defines, at least in part, the archwire slot **304**, and the ligating slide **306** is positioned in covering relation relative to the archwire slot or opening **308** to restrict access to same. In addition to the foregoing, the main body, and more specifically, the anterior facing surface **343** thereof has a first recessed region **345** and a second recessed region **346** formed therein. These recessed regions allow the ligating slide **306** to be matingly received in the channel **329**, and move along a course of travel which will be discussed in greater detail hereinafter. As best seen by reference to FIG. **21** and following, a channel **350** having a given nonlinear shape is formed in the posterior facing surface **344** of the main body **340** and is operable to receive the distal end **326** of the flexible projection or member **324**. As seen therein, the channel has a first end **351**, and a second, opposite end **352**. Still further, there is a first transversely disposed seat **353** formed at the first end **351**, and a second, transversely disposed seat **354** formed at the second end thereof. The channel includes an intermediate portion **355** which couples the first and second transverse seats **353** and **354** together. Still further, the main body **340** includes an abutting edge **356**. As should be understood, the ligating slide **306** is slideably borne by the base member **303**, and is moveable between a first, open position which allows access to the archwire slot **304** and a second closed position which restricts access to the archwire slot. The ligating slide **306** has an anterior and a posterior facing surface **343** and **344**, respectively, and wherein a channel **350** is formed in the posterior facing surface of the ligating slide and is operable to receive the elongated flexible member **324** therein. As earlier discussed, the flexible member has a distal end **326** which is received in the channel and wherein the distal end is resiliently deformed along a substantially arcuately shaped path of travel **327**. The flexible member cooperates with the channel **350** to releasably secure the ligating slide **306** in the first and second positions as will be described below. In the arrangement as seen in the drawings, the channel **350** includes first and second transverse seats **353** and **354**, respectively, which are located at the first and second ends **351** and **352** of the channel. These individual seats are each dimensioned to matingly receive the flexible projection or member **324** and wherein the flexible projection or member is not substantially deformed when received in the respective seats. As should be understood, the movement of the ligating slide **306** between the first and second positions causes the flexible projection or member to resiliently deform and move out of the respective seats and along the intermediate portion **355** of the channel. As will be recognized from a study of FIG. **23**, and similar to the previous forms of the invention, the ligating slide **306** is resiliently deformable and has a superior end **341** which is rounded or beveled, at least in part. Still further, the ligating slide **306** has opposite peripheral edges **347** and the base member **303** shields, at least in part, the opposite peripheral edges as best seen by reference to FIG. **22**.

As seen from a study of the drawings, the ligating slide **306** is moveable along a course of travel **350** from a first position **351** and wherein the distal end **326** of the elongated flexible projection or member is received in the first transverse seat **353** which is located at the first end of the channel **350**, and wherein the ligating slide is substantially clear of the archwire slot **304**; and a second position **352**, and wherein the distal end **326** is located at the second seat **354** and the ligating slide **306** is located in substantially covering relation over the archwire slot and thereby inhibits access to same.

Fifth Embodiment

The fifth embodiment of the orthodontic bracket of the present invention is generally indicated by the numeral **400**, and is best seen by reference to FIGS. **26** and **27**, respectively. As seen therein, the second embodiment of the orthodontic bracket **400** is defined by a bracket body or base member **403** and which further defines a transversely disposed archwire slot **404** which is operable to receive an archwire **405** of traditional design. As earlier discussed, the archwire slot **404** is shown in a transverse orientation relative to the bracket body or base member **403**, however, it will be appreciated that the archwire slot **404** may be oriented in various orientations to achieve various clinical benefits for a patient. As seen in the drawings, the archwire slot **404** is substantially rectangular in shape, and is operable to receive a rectangular or square shaped archwire **405** of conventional design. The orthodontic bracket **400** includes a ligating slide **406** which moveably cooperates with the base member **403**, and is moveable along a path of travel from a first position which allows access to the archwire slot **405** through the opening **408**, and a second position where the moveable ligating slide **406** prevents access to the archwire slot. It will be appreciated by a study of FIG. **27** that the ligating slide **406** is resiliently deformable so as to facilitate passive self-ligation, and the proper seating of the archwire **405** in the archwire slot **404**. As should be understood, the present resiliently deformable ligating slide **406** may be deformed sufficiently such that it may close over an archwire **405** which may be slightly protruding from the archwire slot **404**. Over time, however, the ligating slide **408** will assume its original shape to confine or otherwise enclose the archwire **405** within the archwire slot in the manner of passive self ligation, as earlier discussed. As seen by reference to FIGS. **26** and **27**, the base member **403** has an anterior facing surface or side **410**, and an opposite posterior facing surface or side **411**, which may be adhesively affixed, at least in part,

to an underlying tooth of a patient who is being treated. Still further, the base member **403** has a top or superior surface **412**, and a bottom or inferior surface **413**. As seen in FIG. **27**, the base member **403**, and a portion of the moveable ligating slide **406** define individually elongated channels **414** which may be utilized to engage other orthodontic appliances as is customary for the treatment of a patient. The base member and ligating slide each define a substantially continuous tie wing.

As seen in FIGS. **26** and **27**, for example, and similar to the other forms of the invention, a transverse substantially rectangular cross-sectioned passageway **420** is formed in the base member **403**, and is disposed in substantially parallel spaced relation relative to the archwire slot **404**. As earlier disclosed, this transverse passageway **420** may receive other orthodontic appliances, such as a secondary archwire, or further may utilize the novel torquing spring assembly **31** such as described in previous forms of the invention, and which is seen in FIG. **19**. As seen in the drawings, the fifth form of the orthodontic bracket **400** includes an elongated flexible member **424** which is received in a bore **425**, and which extends generally posteriorly outwardly relative to the base member **403**. The flexible member has a proximal end **426** which is secured in the base **425**, and a distal end **427** which cooperates with the ligating slide **406** in order to achieve the benefits which will be discussed in greater detail hereinafter. As seen in FIG. **27**, the bore **425** does not extend through the base member **403** and has variable diametral dimension which facilitates the movement of the distal end **427** along an arcuately shaped path of travel similar to that disclosed in the fourth form of the invention. Further, and when assembling the fifth form of the invention, it should be clear from a study of FIG. **27** that the flexible member **424** is inserted in the bore **425** from the posterior side **411** of the base member **403**. It is, of course, possible to fabricate a base member where the flexible member could be inserted from the anterior facing surface thereof. As seen by reference to FIGS. **26** and **27**, respectively, the base member **403** further defines a substantially vertically oriented passageway **428** which slideably receives a portion of the moveable ligating slide **406** as will be discussed in greater detail hereinafter. The vertically oriented passageway is located adjacent to the posterior facing surface **411** and extends from the superior surface **412** of the base member **403** to the inferior **413**. As seen by reference to FIG. **27**, the projection **424** extends into and partially occludes the vertically oriented passageway **428**. The operation of the passageway, in combination with the moveable ligating slide **406**, will be discussed in greater detail, hereinafter.

As best seen by reference to FIGS. **26** and **27**, the base member **403** includes a pair of anteriorly extending guide members **430** which are positioned in predetermined substantially parallel spaced relation one relative to the other. The guide members **430** are operable to cooperate with the ligating slide **406** as will be described below. Each of the guide members have an inwardly facing surface **431** which defines a passageway **432** therebetween, and which slideably receives a portion of the ligating slide **406**. Further, and similar to the other forms of the invention **10**, the guide members may further include a portion which is operable to slideably restrain, and otherwise shield, at least in part, the ligating slide **106** (not shown in FIG. **26**). As seen in FIGS. **26** and **27**, for example, the ligating slide **406** has a main body **450** having a first superior end **451**, and an opposite second inferior end **452**. The main body further has an anterior facing surface **453**, and an opposite posterior facing surface **454**. As seen in those drawings, a portion of the posterior facing surface defines, in part, the archwire slot **404** when the ligating slide is positioned in covering relation relative to the archwire slot to restrict access to same. Such as seen in FIG. **27**. The main body **450** has opposite substantially vertically disposed peripheral edges **455** and **456**, respectively. Still further, the main body has a first portion **457** which forms, at least in part, a portion of the anterior facing surface **453** of the base member **403**; and further, a second portion **458** which is positioned in adjacent spaced relation relative to the posterior facing surface **411** of the base member when the orthodontic bracket **400** is assembled. As seen in FIGS. **26** and **27**, the second portion **458** of the ligating slide **406** is disposed in spaced relation relative to the posterior facing surface **454**. Still further, the second portion **458** is dimensioned, in length, thickness and width, to be slideably received within the vertically oriented passageway **428** which is defined by the base member **403**. The second portion of the ligating slide defines a channel **459** similar in shape and in function as was previously described with respect to the earlier forms of the invention and which receives the distal end **427** of the flexible member **426**. The flexible member, in cooperation with the channel **459** defines a course of movement for the accompanying ligating slide **406** for the purposes which will be described, below.

As seen from a study of FIGS. **26** and **27**, the ligating slide **406** is moveable along a course of travel or movement between a first position, where the ligating slide **406** allows access to the archwire slot **404**, and wherein the flexible member **424** is at one end of the channel **459**, and a second position where the ligating slide **406** projects over the opening **408** and restricts access to the archwire slot **404** (FIG. **27**), and the flexible member **424** is at the opposite end of the channel **459**. As the flexible member moves along the channel, the distal end thereof moves along the arcuately shaped path of travel as was previously described in the earlier forms of the invention. In this arrangement, the ligating slide **406** is biasingly supported in at least one of the first or second positions by the flexible member **424**.

Operation

The operation of the described embodiments of the present invention are believed to be readily apparent and are briefly summarized at this point.

In its broadest aspect, the present invention relates to an orthodontic bracket **10**, **100**, which includes a ligating slide **16**, **106** which is configured to be coupled to a base member **13**, **103** and wherein the ligating slide further cooperates F with a biasing member **17**, **107** which receives, at least in part, a portion of the base. As illustrated, and in two forms of the invention **10** and **100**, the biasing member exerts a biasing force which is directed principally in a direction which is substantially parallel, and in spaced relation relative to the direction, or path of movement of the ligating slide. Still further, the present invention relates to an orthodontic bracket **10**, **100** which includes a base member **13**, **103** defining an archwire slot **14**, **104** having an opening **44**, **108**, and wherein at least one projection **34**, **124** extends outwardly from the base member **13**, **103**. The orthodontic bracket **10**, **100** further includes a ligating slide **16**, **106** which is moveable along a course of travel between a first position **75**, **181** which is clear of the archwire slot **14**, **104** and a second position **76**, **182** where the ligating slide **16**, **106** projects over the opening **44**, **108** of the archwire slot. Still further, the present invention includes a resilient biasing member **17**, **107** borne by the ligating slide **16**, **106** and slideably cooperating with a projection **34**, **124**, and wherein the resilient member has a first portion **95**, **175** which

receives the projection **34**, **124** when the ligating slide is in the first position **75**, **181** and a second portion **96**, **176** which receives the projection **34**, **124** when the ligating slide is in the second position **76**, **182**.

The orthodontic bracket **10**, **100** of the present invention includes a base member **13**, **103** defining a transverse archwire slot **14**, **104** having an opening **44**, **108**. A ligating slide **16**, **106** is borne by the base member **13**, **103** and is further moveable relative to the archwire slot **14**, **104**, and wherein the ligating slide is moveable between a first position **75**, **181** where the ligating slide allows access to the archwire slot, and a second position **76**, **182** where the ligating slide projects over the opening **44**, **108** and restricts access to the archwire slot **14**, **104**. In the present invention, the ligating slide **16**, **106** is biasingly supported in at least one of the first or second positions as described above. As was described earlier, the biasing force supplied by the biasing member is generally in a direction which is substantially parallel to the direction of movement of the ligating slide.

The orthodontic bracket **10**, **100** of the present invention further comprises, in one respect, a base member **13**, **103** having a transverse archwire slot **14**, **104** defining an opening **44**, **108** and at least one projection **34**, **124** extending outwardly from the base member **13**, **103**. The present invention further includes a ligating slide **16**, **106** moveable between a first position **75**, **181** which is clear of the archwire slot and a second position **76**, **182** projecting over the opening of the archwire slot. Still further in the present invention, a substantially planar resilient biasing member **17**, **107** is borne by the ligating slide **16**, **106** and matingly cooperates with the projection **34**, **124**. In the arrangement as seen in the drawings, a first portion of the biasing member **95**, **175** receives the projection when the ligating slide **16**, **106** is in the first position **75**, **181**, and a second portion **96**, **176** receives the projection **34**, **124** when the ligating slide is in the second position.

The orthodontic bracket **10**, **100** further comprises a base member **13**, **103** having an opening **44**, **108** and a transverse passageway **30**, **120**, which is oriented in substantially parallel spaced relation relative to the archwire slot **14**, **104**. Still further, the orthodontic bracket **10**, **100** includes a ligating slide **16**, **106** borne by the base member **13**, **103** and moveable relative to the archwire slot **14**, **104**, and wherein the ligating slide is moveable between a first position **75**, **181** where the ligating slide is clear of, and allows access to the archwire slot; and a second position **76**, **182** where the ligating slide projects over, and restricts access to, the archwire slot **14**, **104**. As earlier disclosed, the transverse passageway **30**, **120** is operable to cooperate with a torquing assembly **31**, **121** in order to exert force upon an archwire **15**, **105**.

Another aspect of the orthodontic bracket **10**, **100** of the present invention includes a base member **13**, **103** having a posterior facing surface **21**, **111** and an anterior facing surface **20**, **110** and a projection **34**, **124** extending outwardly from one or both of the posterior **21**, **111** and/or anterior facing surfaces **20**, **110**, and wherein the projection **34**, **124** has an outwardly facing surface **36**, **126**. A ligating slide **16**, **106** is borne by the base member **13**, **103**, and further has a pair of members **84**, **85**, **164**, **165** having opposing surfaces **92**, **172** and a channel **93**, **173** defined therebetween the opposing surfaces **92**, **172**. The channel defined by the biasing member is substantially parallel to the ligating slide. The pair of members **84**, **85**, **164**, **165** resiliently cooperate with the outwardly facing surface **36**, **126** of the projection **34**, **124** in order to exert a biasing force which is substantially parallel to the direction of movement of the ligating slide, and which positions the ligating slide **16**, **106** in an appropriate orientation relative to the archwire slot **14**, **104**. In this regard, the pair of members **84**, **85**, **164**, **165** are spaced, and resiliently moveable, one relative to the other. Still further, a biasing abutment **94**, **174** is defined by one of the surfaces **92**, **172** of the respective members. The biasing abutment at least partially occludes the channel **93**, **173**.

The present invention also relates to an orthodontic bracket **100** which has a base member **103** having a posterior facing surface **111**, and an anterior facing surface **110**, and wherein a projection **124** extends generally outwardly and in the direction of the posterior facing surface **111**, and wherein the anterior facing surface **110** of the base member **103** defines an archwire slot **104** having an opening **108**. In this second form of the invention **100**, a ligating slide **106** is borne by the base member **103** and is moveable along a course of travel **180** between a first position **181** which allows access to the archwire slot **104** through the opening **108**, and a second position **182**, which restricts access to the archwire slot **104** through the same opening **108**. In this arrangement, the ligating slide **106** includes a first portion **157** which extends to a second portion **158**. In this arrangement, the first portion **157** forms, at least in part, a portion of the anterior facing surface **110** of the base member **103**, and the second portion **158** is positioned in adjacent spaced relation relative to the posterior facing surface **111** of the base member **103**. In the arrangement as seen the second form of the invention **100**, a resilient biasing member **107** is coupled to the ligating slide **106** and which operatively mates with and or otherwise cooperates with the projection **124**. The resilient biasing member **107** exerts a biasing force relative to the projection **124** which is substantially perpendicular; and further substantially parallel and non-coaxial alignment relative to the path of travel **180**.

In another aspect of the present invention, an orthodontic bracket **10** includes a base member **13** defining an archwire slot **14** and which traverses the base member **13**, and wherein the archwire slot **14** defines an opening **44** within an anterior facing surface **20** of the base member **13**. Still further, in the first form of the invention **10**, a channel **43** extends along the anterior side **20** of the base member **13** from the archwire slot **14** to a lowermost surface **23** of the base member **13**. In this arrangement, a fixed projection **34** extends laterally outwardly from the base member **13** and into a portion of the channel **43**. Further, a biasing member **17** resiliently cooperates with the fixed projection **34**.

The present invention also relates to a method of forming an orthodontic bracket **10** which includes providing an orthodontic bracket base member **13** having an anterior surface **20** and a posterior surface **21**; providing an opening **44** within the anterior surface **20** of the base member **13**, and wherein the opening **44** traverses the width of the base member **13**, and further defines, at least in part, an archwire slot **14**. Still further, the present methodology includes a step of providing a channel **43** within the base member **13**, and which extends downwardly relative to the archwire slot **14**; and providing a projection **34** extending outwardly from the channel **43** and which is rigidly affixed to the base member **13**. The present methodology also relates to a method of forming an orthodontic bracket which includes the steps of providing a ligating slide **16**, **106** which is moveably borne by a base member **13**, **103**; and coupling a biasing member **17**, **107** to the ligating slide **16**, **106**, and wherein the biasing member is substantially parallel to the ligating slide.

Therefore, it will be seen that the present invention has been designed to meet the future needs of the orthodontic profession, and further addresses many of the shortcomings attendant with the prior art devices and practices which have been utilized heretofore. The present orthodontic bracket will result in a greater range of treatment options and the quality of the resulting orthodontic treatment will be greatly improved in view of the many features of the present invention.

In compliance with the statute, the invention has been described in language more or less specific as to structural and methodical features. It is to be understood, however, that the invention is not limited to the specific features shown and described, since the means herein disclosed comprise preferred forms of putting the invention into effect. The invention is, therefore, claimed in any of its forms or modifications within the proper scope of the appended claims appropriately interpreted in accordance with the doctrine of equivalents.

What is claimed is:

1. An orthodontic bracket for coupling an archwire with a tooth, comprising:

a bracket body that is configured to be mounted to the tooth and that includes an archwire slot adapted to receive the archwire, an anterior surface, a slide channel, and a recess that is formed in the anterior surface;

a ligating slide that includes a superior end and is movable relative to the bracket body in the slide channel between an opened position and a closed position;

a resilient member; and

a projection that cooperates with the resilient member to releasably restrain the heating slide in the closed position,

wherein during movement of the ligating slide toward the opened position, the projection cooperates with the resilient member to produce a force in a perpendicular direction relative to the projection,

wherein the recess includes a wall that opposes the superior end of the ligating slide in the closed position and receives a tool to contact the superior end of the ligating slide so as to move the ligating slide toward the opened position.

2. The bracket of claim **1**, wherein the recess is narrower in width than the width of the ligating slide.

3. The bracket of claim **1**, wherein the slide channel opens to the archwire slot opposite the recess.

4. The bracket of claim **3**, wherein a pair of opposed guide members define at least a portion of the slide channel, the ligating slide sliding between the pair of opposed guide members.

5. The bracket of claim **4**, wherein the pair of opposed guide members are generally L-shaped.

6. The bracket of claim **4**, wherein the ligating slide includes a mesial portion, a distal portion, and a raised central portion positioned intermediate to the mesial and distal portions.

7. The bracket of claim **6**, wherein the mesial portion, the distal portion, and the raised central portion define gingival-occlusal directed grooves that are engagable by the pair of opposed guide members.

8. The bracket of claim **6**, wherein the raised central portion projects in a labial direction such that a labial side of the raised central portion is substantially flush with a labial side of the pair of guides when the ligating slide is in the closed position.

9. The bracket of claim **1**, wherein the resilient member includes a channel and an edge of the channel defines an abutment and during movement of the ligating slide, the projection passes along the channel to slidably engage the abutment.

10. The bracket of claim **9**, wherein the abutment releasably supports the ligating slide in the closed position.

11. The bracket of claim **9**, wherein the abutment separates the channel into a first portion and a second portion, the first portion receives the projection when the ligating slide is in the opened position and the second portion receives the projection when the ligating slide in the closed position.

12. The bracket of claim **9**, wherein the abutment forms a restriction in the channel.

13. The bracket of claim **9**, wherein contact between the projection and the abutment causes the resilient member to resiliently deform in a direction that is perpendicular to the movement of the ligating slide.

* * * * *