IN THE UNITED STATES PATENT AND TRADEMARK OFFICE

In re Patent of:	Kyle P. Moore et al.	
U.S. Pat. No.:	9,084,601	Attorney Docket No.: 11030-0049IP1
Issue Date:	July 21, 2015	
Appl. Serial No.:	13/832,522	
Filing Date:	Mar 15, 2013	
Title:	DETACHABLE MOTOR POWERED SURGICAL INSTRUMENT	

Mail Stop Patent Board
Patent Trial and Appeal Board
U.S. Patent and Trademark Office
P.O. Box 1450
Alexandria, VA 22313-1450

PETITION FOR *INTER PARTES* REVIEW OF U.S. PATENT NO. 9,084,601 PURSUANT TO 35 U.S.C. §§ 311–319, 37 C.F.R. § 42

TABLE OF CONTENTS

EXHIBITS

IS1001	U.S. Pat. No. 9,084,601 to Moore et al. ("the '601 patent")
IS1002	Excerpts from the prosecution histories of U.S. Pat. Nos. 9,084,601 (Serial No. 13/832,522), 8,998,058 (Serial No. 14/282,494), 8,991,677 (Serial No. 14/283,729), 8,752,749 (Serial No. 13/118,210), 8,196,795 (Serial No. 12/856,099), and 7,793,812 (Serial No. 12/031,628)
IS1003	Declaration of Dr. Gregory S. Fischer
IS1004	[Reserved]
IS1005	U.S. Patent App. Pub. No. 2005/0131390 to Heinrich et al. ("Heinrich")
IS1006	U.S. Patent No. 5,865,361 to Milliman et al. ("Milliman")
IS1007	U.S. Patent No. 7,524,320 to Tierney et al. ("the '320 patent")
IS1008	U.S. Patent No. 8,196,795 to Moore et al. ("the '795 patent")
IS1009	U.S. Patent No. 8,752,749 to Moore et al. ("the '749 patent")
IS1010	U.S. Patent No. 5,779,130 to Alesi et al. ("Alesi")
IS1011	Webster's Third New International Dictionary (1986)
IS1012	[Reserved]
IS1013	[Reserved]

IS1014	Oliver Tonet et al., Comparison of Control Modes of a Hand-Held Robot for Laparoscopic Surgery, MICCAI 2006, Lecture Notes in Computer Science, vol. 4190, pp. 429-36 (Springer, Berlin, Heidelberg 2006)
IS1015	isbnsearch.org search results for ISBN 978-3-540-44707-8
IS1016	Summary of Tonet (printed on April 3, 2018 from https://link.springer.com/chapter/10.1007/11866565_53#citeas)
IS1017	Table of Contents for Medical Image Computing and Computer-Assisted Intervention – MICCAI 2006, 9th International Conference, Copenhagen, Denmark, October 1-6, 2006. Proceedings, Part I (printed on April 3, 2018 from https://link.springer.com/book/10.1007/11866565?page=3#toc)
IS1018	"About this book" information for Medical Image Computing and Computer-Assisted Intervention – MICCAI 2006, 9th International Conference, Copenhagen, Denmark, October 1-6, 2006. Proceedings, Part I (printed on April 3, 2018 from http://www.springer.com/us/book/9783540447078?wt_mc=ThirdParty.SpringerLink.3.EPR653.About_eBook)
IS1019	September 8, 2005 archive of http://miccai2006.dk:80/ (printed on April 3, 2018 from web.archive.org) – MICCAI 2006 accepted papers
IS1020	December 5, 2006 archive of http://miccai2006.dk:80/ (saved on April 6, 2018) – About MICCAI

IS1021	HTML source code for December 5, 2006 archive of http://miccai2006.dk:80/ (saved on April 6, 2018)
IS1022	MEDLINE index record for Tonet (IS1014)
IS1023	MEDLINE Fact Sheet
IS1024	Photographs of the MICCAI 2006 Conference Proceedings and Tonet
IS1025	Declaration of Ryan O'Connor

I. INTRODUCTION

Intuitive Surgical, Inc. ("Petitioner") petitions for *Inter Partes* Review ("IPR") of claims 1-20 of U.S. Patent 9,084,601 ("the '601 patent").

The '601 patent relates to a "detachable motor-powered surgical instrument" in general and to a "surgical cutting and stapling instrument" in particular. The claimed instrument includes "a contact arrangement that is configured to permit power to be supplied to the motor only when the housing [of the surgical instrument] is operably attached to [an] actuator arrangement." IS1001, Abstract.

However, such instruments were not new at the time of the alleged priority date of the '601 patent. As explained below, claims 1-20 of the '601 patent are either anticipated by Heinrich or obvious over Heinrich in view of Alesi, Tonet, and/or Milliman. Petitioner therefore requests IPR of the challenged claims on Grounds 1-6 below.

II. MANDATORY NOTICES UNDER 37 C.F.R § 42.8

A. Real Parties-In-Interest Under 37 C.F.R. § 42.8(b)(1)

Intuitive Surgical, Inc. is the real party-in-interest. No other party had access to the Petition, and no other party had any control over, or contributed to any funding of, the preparation or filing of the present Petition.

B. Related Matters Under 37 C.F.R. § 42.8(b)(2)

Petitioner is not aware of any disclaimers, reexamination certificates, or petitions for *inter partes* review of the '601 patent. The '601 patent is the subject

of Civil Action No. 1:17-cv-00871-LPS, filed on June 30, 2017 in the United States District Court for the District of Delaware. Concurrently with this petition, Petitioner filed IPR petitions for U.S. Pat. Nos. 8,991,677 and 8,998,058, which are related to the '601 patent.

C. Lead And Back-Up Counsel Under 37 C.F.R. § 42.8(b)(3)

Petitioner provides the following designation of counsel.

LEAD COUNSEL	BACK-UP COUNSEL
John C. Phillips, Reg. No. 35,322 3200 RBC Plaza, 60 South Sixth Street Minneapolis, MN 55402 Tel: 858-678-5070 / Fax 877-769-7945	Steven R. Katz, Reg. No. 43,706 3200 RBC Plaza, 60 South Sixth Street Minneapolis, MN 55402 Tel: 617-542-5070 Ryan P. O'Connor, Reg. No. 60,254 3200 RBC Plaza, 60 South Sixth Street Minneapolis, MN 55402 Tel: 858-678-5070

D. Service Information

Please address all correspondence to the address above. Petitioner consents to electronic service by email at IPR11030-0049IP1@fr.com (referencing No. 11030-0049IP1 and cc'ing PTABInbound@fr.com, phillips@fr.com, katz@fr.com, and oconnor@fr.com).

III. PAYMENT OF FEES – 37 C.F.R. § 42.103

Petitioner authorizes the Office to charge Deposit Account No. 06-1050 for the petition fee set in 37 C.F.R. § 42.15(a) and for any other required fees.

IV. REQUIREMENTS FOR IPR UNDER 37 C.F.R. § 42.104

A. Grounds for Standing Under 37 C.F.R. § 42.104(a)

Petitioner certifies that the '601 patent is available for IPR, and Petitioner is not barred or estopped from requesting IPR.

B. Challenge Under 37 C.F.R. § 42.104(b) and Relief Requested

Petitioner requests IPR of claims 1-20 of the '601 patent on the grounds listed below. A declaration from Dr. Fischer (IS1003) is included in support.

Grounds	Claims	Basis for Rejections under 35 U.S.C. § 103
Ground 1	1-2, 4-6, 8-11, 13, 15-20	Anticipated by **Heinrich** (IS1005) under 35 U.S.C. § 102.
Ground 2	1-2, 4-6, 8-11, 13, 15-20	Obvious over **Heinrich** (IS1005) in view of **Milliman** (IS1006) under 35 U.S.C. § 103.
Ground 3	1-2, 4-11, 13-20	Obvious over **Heinrich** (IS1005) in view of **Alesi** (IS1010) under 35 U.S.C. § 103.
Ground 4	1-2, 4-11, 13-20	Obvious over **Heinrich** (IS1005) in view of **Alesi** (IS1010) and further in view of **Milliman** (IS1006) under 35 U.S.C. § 103.
Ground 5	3, 12	Obvious over **Heinrich** (IS1005) in view of **Tonet** (IS1014).
Ground 6	3, 12	Obvious over **Heinrich** (IS1005) in view of **Tonet** (IS1014) and further in view of **Milliman** (IS1006) under 35 U.S.C. § 103.

The '601 patent issued from U.S. App. No. 13/832,522, filed on Mar 15, 2013, which is a continuation of U.S. App. No. 13/118,210, filed on May 27, 2011, now U.S. Pat. No. 8,752,749, which is a continuation-in-part of U.S. App. No. 12/856,099, filed on Aug. 13, 2010, now U.S. Pat. No. 8,196,795, which is a

continuation of U.S. App. No. 12/031,628, filed on Feb. 14, 2008, now U.S. Pat. No. 7,793,812. Thus, the earliest possible date to which the '601 patent could claim priority (hereinafter the "earliest effective filing date") is Feb. 14, 2008.

Petitioner does not concede that the '601 patent is entitled to this priority date, but has elected not to argue the issue in the present Petition because all prior art references identified in the Grounds presented below pre-date the earliest possible priority date for the '601 patent. However, Petitioner reserves the right to present such an argument in this proceeding or other proceedings involving the '601 patent.

Heinrich (IS1005) published on Jun. 16, 2005, which is more than one year before the earliest effective filing date, and thus qualifies as prior art under 35 U.S.C. § 102(b). Heinrich was made of record during prosecution of the '601 patent, but never was discussed by the examiner or the applicant.[1]

Milliman (IS1006) published on Feb. 2, 1999, which is more than one year before the earliest effective filing date, and thus qualifies as prior art under 35 U.S.C. § 102(b). Milliman was made of record during prosecution of the '601 patent. In fact, it is incorporated by reference into the specification of the '601 patent. However, it never was discussed by the examiner.

[1] Applicants cited more than 4000 references during prosecution of the '601 patent.

Alesi (IS1010) issued on July 14, 1998, which is more than one year before the earliest effective filing date, and thus qualifies as prior art under 35 U.S.C. § 102(b). Alesi was cited by the examiner during prosecution of the '601 patent's priority applications.

Tonet (IS1014) published in 2006, which is more than one year before the earliest effective filing date, and thus qualifies as prior art under 35 U.S.C. § 102(b). Tonet was not cited during prosecution of the '601 patent. Notably, Tonet was freely distributed to the more than 1000 POSITAs, including Dr. Fischer, who attended MICCAI 2006 (a conference on computer assisted intervention that was promoted to POSITAs) without limitations on further use or distribution, indexed by MEDLINE, and made available online to everyone, including POSITAs, by Springer-Verlag Berlin Heidelberg in 2006. *See* IS1003, IS1014-IS1025. The dates in Tonet's copyright information are admissible in these proceedings. *See, e.g.*, IPR2014-00527, Paper 41, pp. 10-12 (P.T.A.B. May 18, 2015); IS1003, ¶¶ 85-91; IS1015-IS1025.

V. SUMMARY OF THE '601 PATENT

The abstract of the '601 patent describes a detachable motor-powered surgical instrument (*e.g.*, a surgical stapler) that permits power to be supplied to the motor (which resides in the detachable instrument) "only when the housing [of the instrument] is operably attached to an actuator arrangement." IS1001,

Abstract. The term "actuator arrangement," however, is used only in the abstract and claims of the '601 patent. Thus, the scope of this term is uncertain.

In a first embodiment, a surgical cutting and stapling instrument includes "a disposable loading unit 16 . . . that is coupled to a conventional surgical cutting and stapling apparatus 10." IS1001, 10:63-11:7, Fig. 1. Disposable loading unit/detachable instrument 16 includes a mechanism that separates its motor from its power source (*i.e.*, a battery) when the instrument is detached from the surgical cutting and stapling apparatus 10. IS1001, 12:4-35, Figs. 2-12.

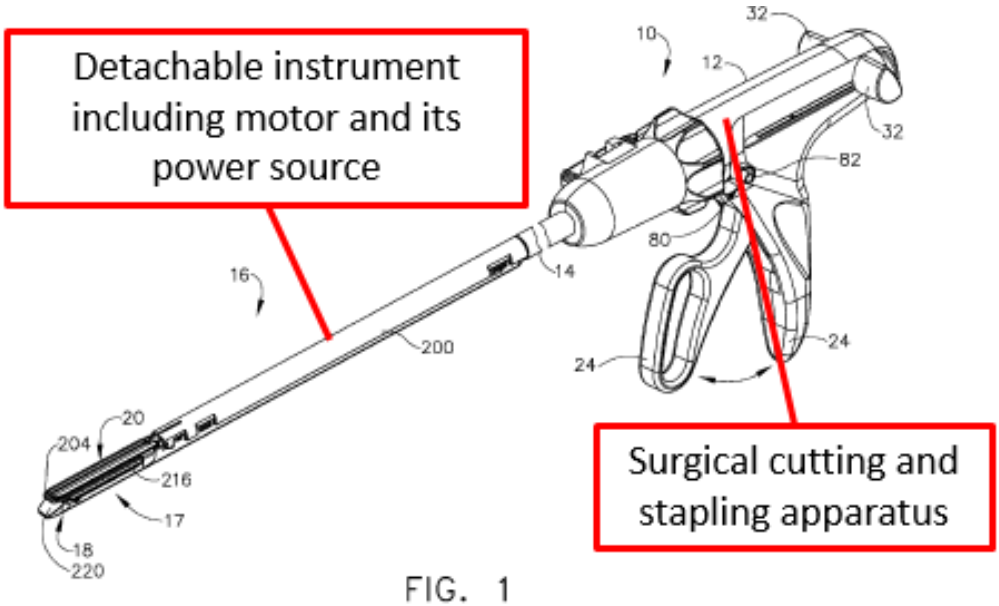

FIG. 1

"The construction and general operation of . . . cutting and stapling apparatus 10 is described in [Milliman] . . . which [is] incorporated by reference [in the '601 patent]." IS1001, 10:67-11:3; *compare* IS1001, Fig. 1 *with* IS1006, Fig. 1.

Figs. 13-14 show a second embodiment in which the surgical tool 1200 is coupled to a robotic system 1000 comprising robotic arm cart 1100 and a controller

1001.[2] IS1001, 15:61-66, 16:14-16, Figs. 13-14. The motor 3011 to drive the tool 1200, and its power source (*i.e.*, battery 3022), can reside within a detachable tool mounting portion 3010 (*see, e.g.*, Fig. 52). As explained below, an on-off solenoid powered switch 3024 electrically isolates the motor from its power source when the tool-mounting portion 3010 is detached from the robotic arm cart 1100. IS1001, 38:40-39:67, Fig. 52. As a result, power can be supplied to the motor only when the tool mounting portion 3010 is attached to the robotic arm cart 1100 of the robotic system 1000. IS1001, 39:32-50.

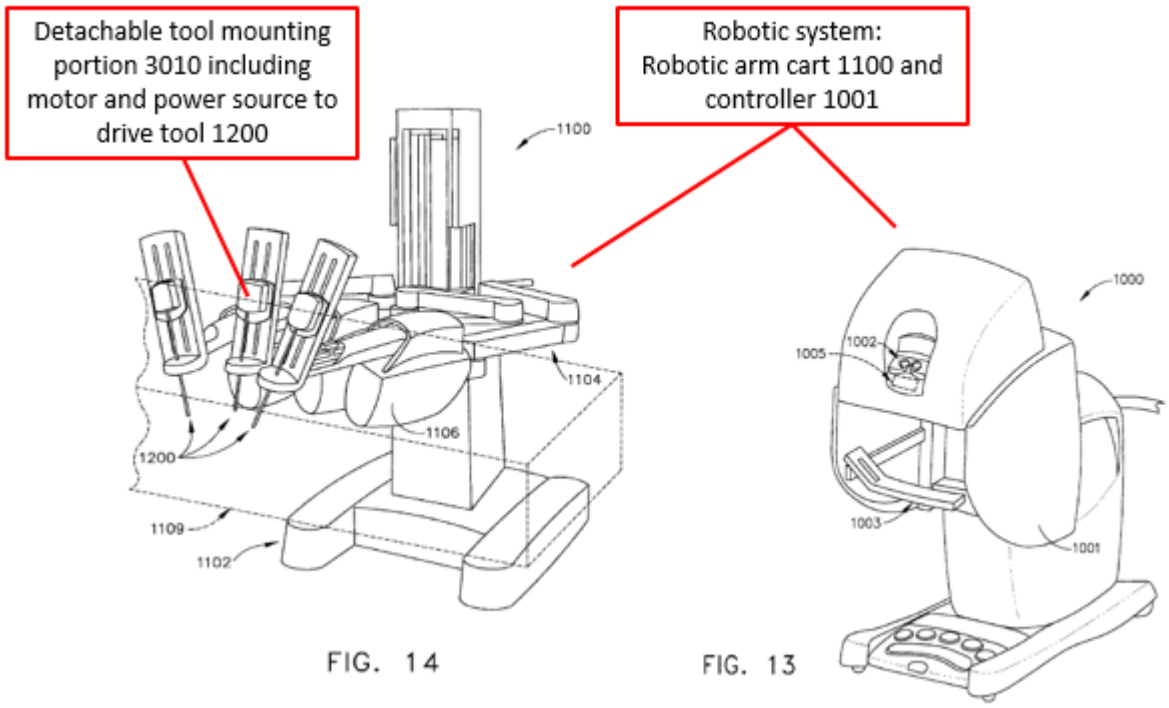

FIG. 14 FIG. 13

[2] As noted below, applicants added this robotic embodiment to the specification of the ’601 patent for the first time on May 27, 2011. Thus, May 27, 2011 may be the earliest priority date for one or more claims of the ’601 patent.

"Examples of [robotic system 1000] [are disclosed in the prior art, *e.g.*,] in U.S. Pat. No. 7,524,320, [a Petitioner's patent,] which [is] incorporated by reference" into the '601 patent. IS1001, 15:63-16:1. Indeed, Figures 13, 14, and 16 all appear to be taken from the prior art '320 patent. *Compare* IS1001, Figs. 13, 14, 16 *with* IS1007 ('320 patent), Figs. 2, 3A, 3B.

With regard to the first embodiment shown in Figs. 1 and 2, "the disposable loading unit 16 may generally comprise a tool assembly 17 for performing surgical procedures such as cutting tissue and applying staples on each side of the cut. The tool assembly 17 may include a cartridge assembly 18 that includes a staple cartridge 220 that is supported in a carrier 216. An anvil assembly 20 may be pivotally coupled to the carrier 216 in a known manner for selective pivotal travel between open and closed positions . . . . An actuation sled 234 is supported within the tool assembly 17 and is configured to drive . . . pushers and staples in the staple cartridge 220 in a direction toward the anvil assembly 20 as the actuation sled 234 is driven from the proximal end of the tool assembly 17 to the distal end 220." IS1001, 11:20-38, Fig. 2.

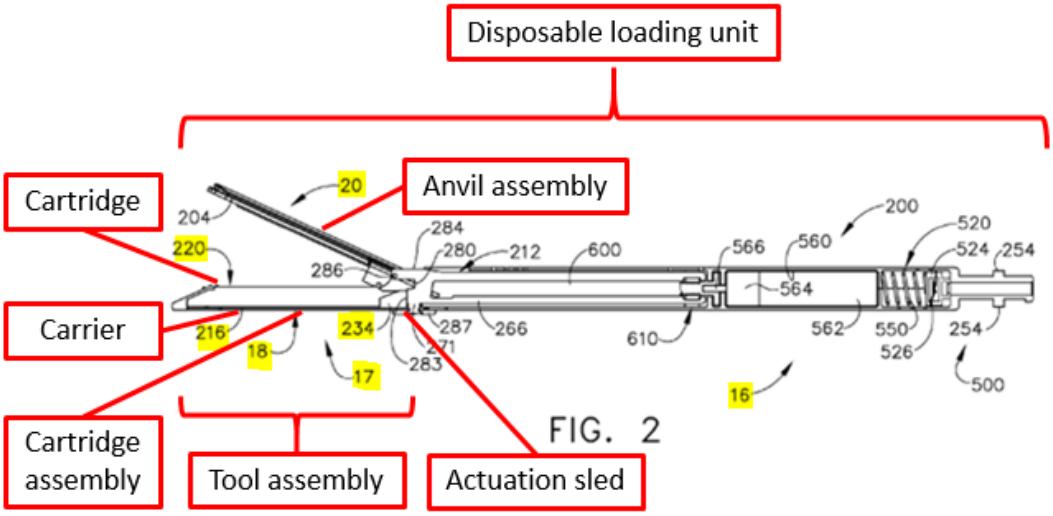

"The disposable loading unit 16 may further include an axial drive assembly 212 that comprises a drive beam 266 . . . . The distal end of the drive beam 266 may include a vertical support structure 271, which supports a knife blade 280 and an abutment surface 283 which engages the central portion of actuation sled 234 during stapling procedure." IS1001, 11:39-47, Fig. 2.

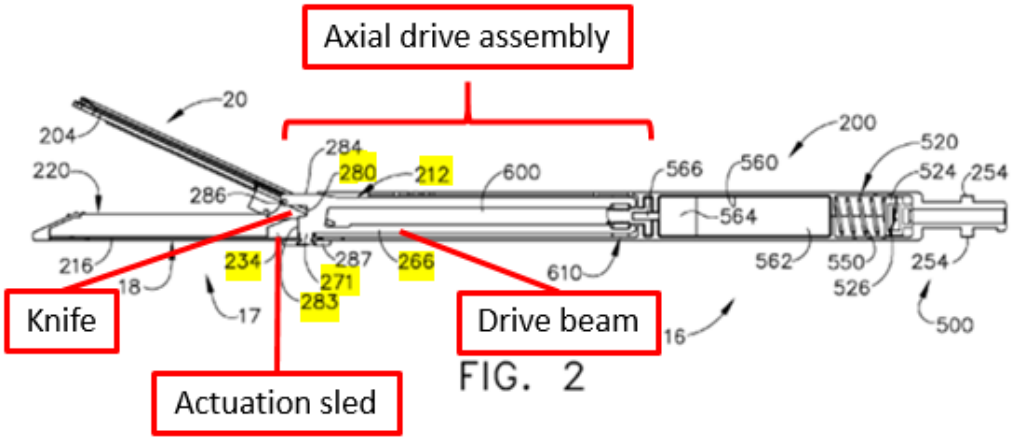

The housing 200 of disposable loading unit 16 may further include: (1) a switch portion 520 that movably houses a battery 526 therein; (2) a motor 562; (3) a drive screw 600; and (4) a drive nut 610. IS1001, 12:4-35, 13:14-28, Fig. 5.

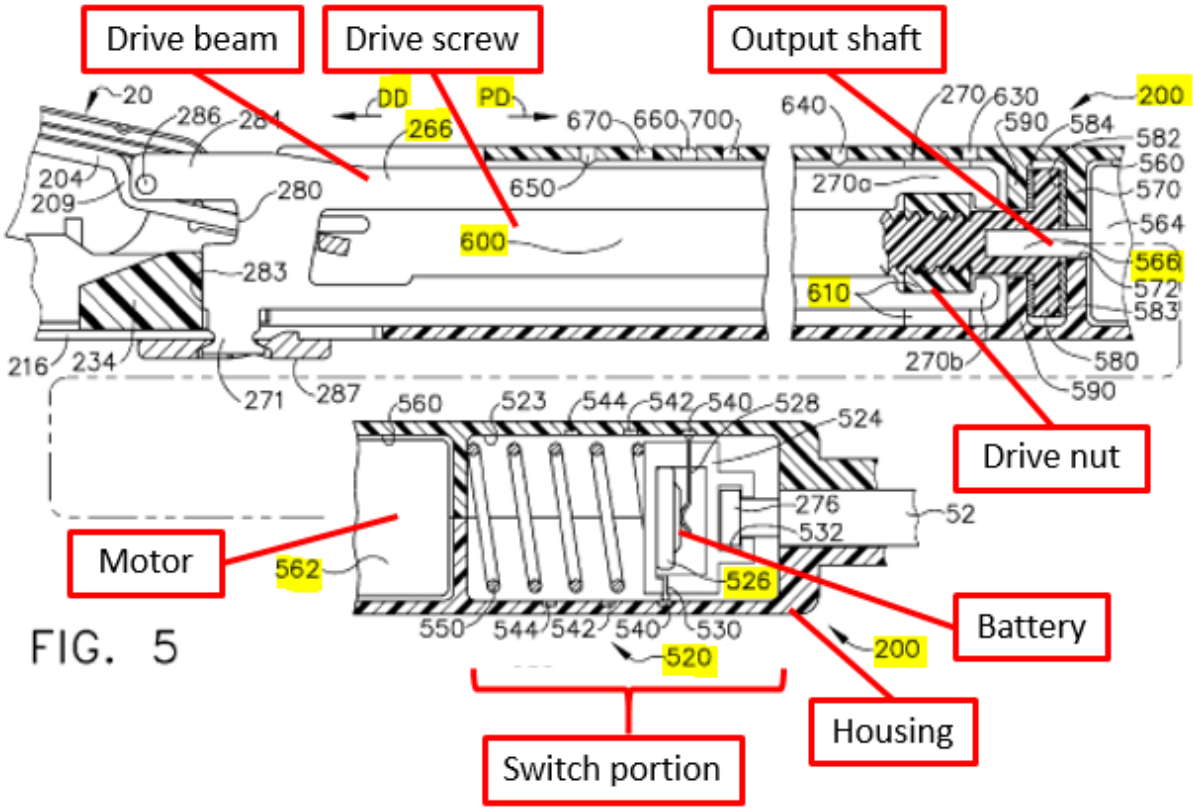

FIG. 5

Battery 526 provides power to the motor 562, the operation of which causes an output shaft 566 to rotate. *Id*. Rotation of output shaft 566 effects "rotation of the drive screw 600 within the drive nut 610 [to] drive the drive beam 266 in the distal direction 'DD' or in the proximal direction 'PD' depending upon the direction of rotation of the drive screw 600." IS1001, 12:56-59.

When the DLU is detached from surgical/stapling apparatus 10, battery 526 is disconnected from the motor 562 (i.e., a biasing/spring member 550 is not providing connectivity between battery 526 and motor 562) resulting in no power being supplied to the motor 562. IS1001, 12:4-35. Battery 526 makes contact with contacts 540, 542, or 544 (thereby supplying power to the motor 562) when the

DLU 16 is connected to the surgical apparatus 10. *Id*. Surgical apparatus 10 includes a control rod 52 that inserts into a control rod socket 532 of the housing 200 of DLU 16 to cause the battery contacts 528, 530 to make a connection with contacts 540, 542, or 544. *Id*. Conversely, when the control rod 52 is not inserted into the control rod socket 532 (*i.e*., when the disposable loading unit 16 is detached from the surgical apparatus 10), there is no longer any contact between battery 526 and motor 562. *Id*. This breaks the electrical connection between the battery 526 and the contacts 540, 542, 544. *Id*. Thus, battery 526 supplies power to motor 562 only when the housing 200 of disposable loading unit 16 is attached to the surgical apparatus 10. *Id*. The '601 patent states that the purpose of this mechanism is to "prevent the battery 526 from being drained during non-use." *Id*.

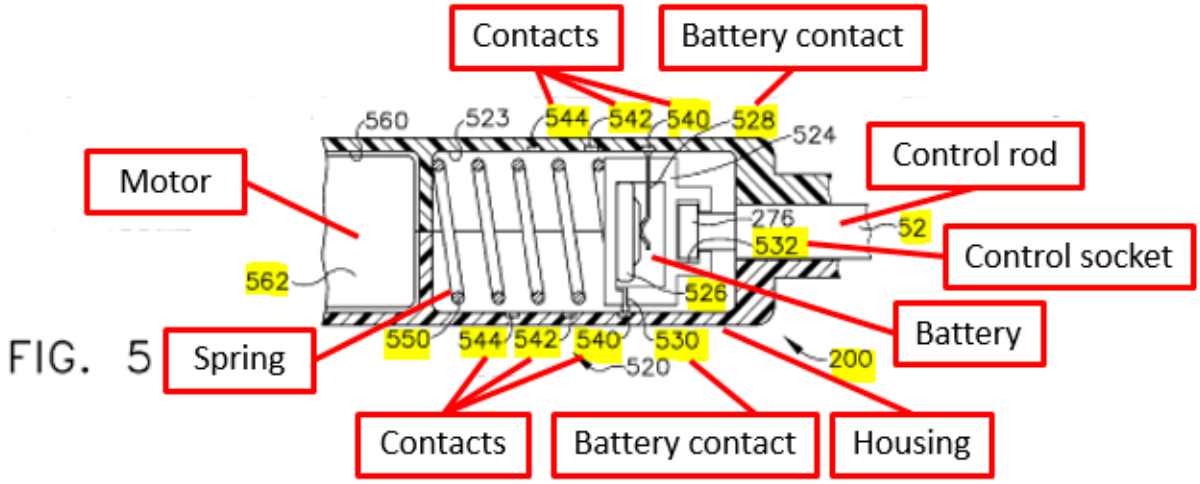

FIG. 5

In the second embodiment, the '601 patent describes a tool mounting portion 3010 that sits in between the surgical tool 3000 and the robotic system 1000. *See, e.g.*, IS1001, 38:40-39:67, Fig. 52.

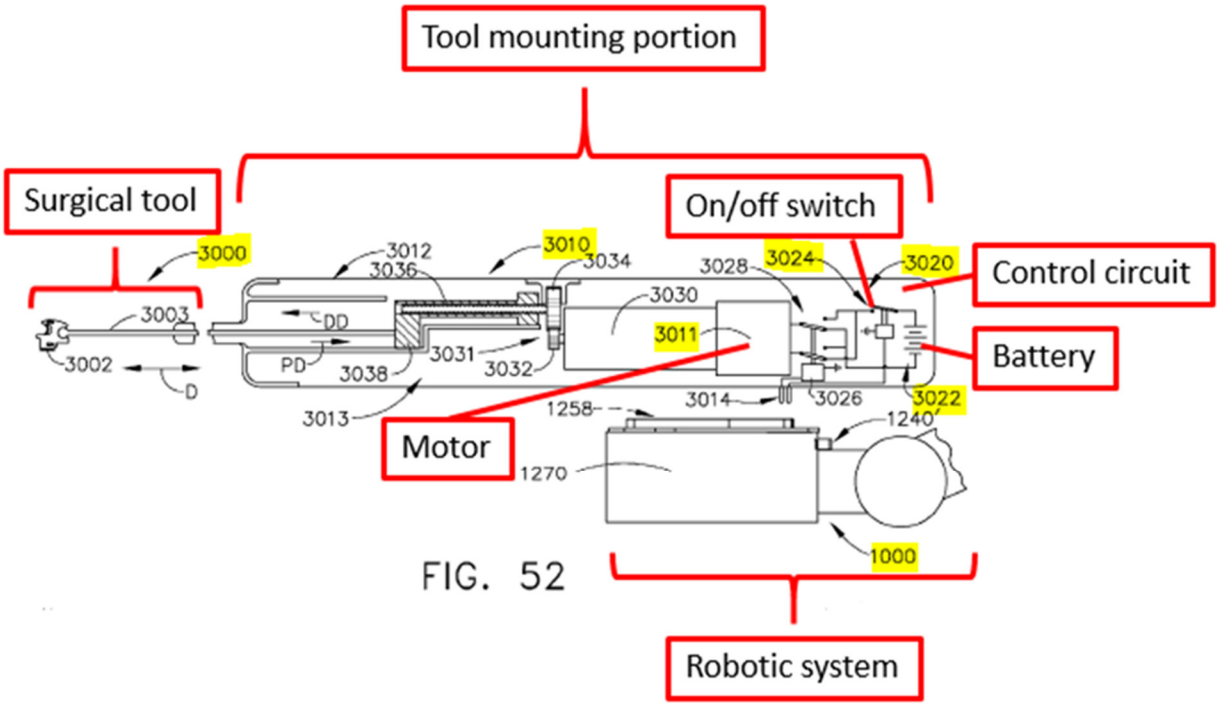

The surgical tool 3000 is detachable from the tool mounting portion 3010, which in turn is detachable from the robotic system 1000. *Id*. In this example, surgical tool 3000 and its tool mounting portion 3010 form a surgical instrument. The tool mounting portion 3010 has a control circuit 3020, which includes "a power supply in the form of a battery 3022 that is coupled to an on-off firing solenoid powered switch 3024." IS1001, 39:32-35. "Thus, when the controller 1001 of the robotic system 1000 supplies an appropriate control signal, switch 3024 will permit battery 3022 to supply power to the double pole switch 3028 . . . to supply power to the motor 3011." IS1001, 39:38-44. Because switch 3024 will change from an open (off) state to a closed (on) state only upon receiving a control signal from the robotic system 1000, power can be supplied to the motor 3011 only

when an electrical connection is made between the tool mounting portion 3010 and robotic system 1000 (*e.g.*, the housing of tool mounting portion 3010 is physically attached to robotic system 1000). IS1001, 39:32-50; IS1003, ¶ 52.

"In alternative embodiments, [however,] the power supply may comprise alternating current 'AC' that is supplied to the motors by the robotic system 1000. That is, the AC power would be supplied from the system powering the robotic system 1000 through the tool holder and adapter." IS1001, 44:28-32. "In still other embodiments, a power cord or tether may be attached to the tool mounting portion 3300 to supply the requisite power from a separate source of alternating or direct current." IS1001, 44:25-36; *see also* 52:55-60 ("In one form or embodiment, the control circuit 3910 includes a power supply in the form of a battery 3912 . . . . In other embodiments, however, the power supply may comprise a source of alternating current."). In this latter embodiment, the electrical connection between the motor and the robotic system supplies power to the motor and this power is cut off when the housing of tool-mounting portion 3010 is detached from the robotic system 1000. IS1003, ¶ 53.

VI. SUMMARY OF THE PROSECUTION HISTORY

The chain of applications to which the '601 patent claims priority is provided above. *See* Section IV.B, *supra*. Notably, the '210 continuation-in-part priority application added descriptions of various robotic systems that were not

disclosed in the earlier priority applications.[3] *Compare* IS1007 ('795 patent) *with* IS1008 ('749 patent) (adding the text at 3:8-4:5, 15:18-80:2, Figs. 13-130 to the '795 patent). During prosecution of the '601 patent's priority applications, the USPTO rejected one or more of applicant's original claims as anticipated by Alesi or obvious over Alesi in view of other references. IS1002, 2-6, 21-22, 38. Like the '601 patent, Alesi discloses a self-contained powered surgical stapler.

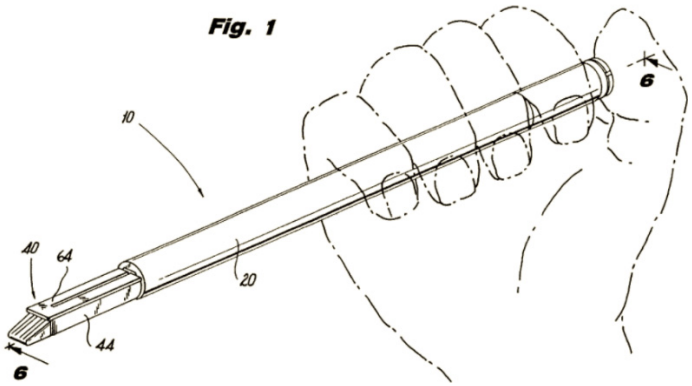

IS1010, Fig. 1.

In response to these rejections, applicant amended all of the pending claims to require a battery/power source in the housing of the disposable loading unit that is movable from a disconnected position to a connected position when attached to a control rod/member of a surgical instrument. IS1002, 10-15, 26-31.

The claims presented in the application that issued as the '601 patent, however, included no such limitations. IS1002, 74-77. As a result, they are

[3] If one or more claims of the '601 patent drawn to these robotic systems, then May 27, 2011 is the earliest priority date for those claims.

broader than the claims examined during prosecution of the '601 patent's priority applications. For example, instead of the specific movable battery configuration claimed in the earlier priority applications, the '601 patent's claims require only "a contact arrangement supported by [the] housing and configured to permit power to be supplied to the motor only when the housing is operably attached to the actuator arrangement." IS1001, Claim 1; *see also* Claims 11 and 17 (same). There is no requirement that the surgical instrument include its own power source at all, much less one that is movable from a disconnected position to a connected position. *Id*.

This broader scope of the '601 patent's claims encompasses known devices. Indeed, numerous references disclose the purportedly missing feature—*i.e*., a contact arrangement that supplies power to the disposable loading unit's motor only when the housing of the disposable loading unit is attached to the actuator arrangement. Heinrich, for example, discloses a motor in a disposable loading unit removably connected to an actuator arrangement wherein the actuator arrangement supplies power to the motor via a contact arrangement. IS1005, Claim 18; IS1003, ¶ 78. Thus, the contact arrangements that connect the motor to the power supplies in Heinrich is configured to permit power to be supplied to the motor only when the disposable loading units are "operably attached" to the control system, as required by the '601 patent's claims. IS1005, Claim 53; IS1003, ¶¶ 78, 121-25.

Nonetheless, provisional non-statutory double patenting rejections in view of

claims in pending applications co-owned by applicant were the only rejections of the ’601 patent’s claims during prosecution. IS1002, 78-85. Notably, in those rejections, the USPTO recognized that the “typical and well known surgical stapler components [recited in the claims are] not critical to the invention . . . .” *Id*.

VII. CLAIM CONSTRUCTION UNDER 37 C.F.R. § 42.104(b)(3)

For the purposes of this IPR only, Petitioner submits that the terms of the ’601 patent are to be given their broadest reasonable interpretation as understood by one of ordinary skill in the art at the time in view of the specification (“BRI”).[4] 37 C.F.R. § 42.100(b). Also, for purposes of this IPR only, Petitioner submits that all claim terms should be given their plain meaning under the BRI standard, and provides the following specific constructions for certain terms.

[4] Petitioner acknowledges that the Office has proposed to change from the BRI standard to the standard applied in District Courts. *See* 83 Fed. Reg. 21221 (proposed May 9, 2018). Petitioner submits that the prior art discussed herein invalidates the challenged claims under either standard. If the Office changes the rule after the filing of the Petition and applies the new standard to this proceeding, then due process requires the Office afford Petitioner an opportunity to provide additional argument and evidence on that issue.

A. "Means for removably coupling the housing to an actuator arrangement" (claim 17)

This claim element includes the words "means for" and therefore presumptively invokes 35 U.S.C. § 112, ¶ 6 ("112/6"). The claimed function performed by the "means" is "removably coupling the housing to an actuator arrangement." IS1001, Claim 17.

The corresponding structures in the '601 patent that perform this function include "engagement nubs 254." IS1001, 11:65-12:3, Fig. 2; IS1003, ¶¶ 58-61. Fig. 2 of the '601 patent shows "engagement nubs 254 [on disposable loading unit 16] for releasably engaging elongated body 14 of a surgical stapling apparatus [10]." IS1001, 11:65-12:3.

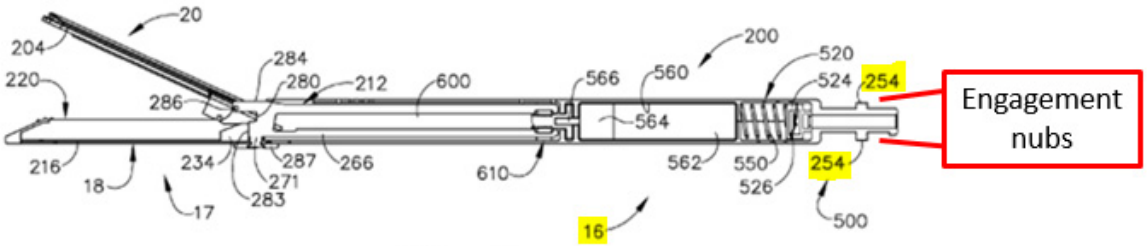

FIG. 2

B. "Contact arrangement" (claims 1, 11, and 17)

The BRI of this element is a combination of junctions or touching surfaces of electrical conductors through which an electrical current passes. IS1003, ¶¶ 70-73. This interpretation is consistent with the specification of the '601 patent. *Id.* For example, the '601 patent describes "a series of axially spaced contact arrangements in the housing for controlling supply of power from the battery to the

motor." IS1001, 4:10-14. Figure 3 of the '601 patent shows this contact arrangement as contacts 528 and 530, 540, 542, and 544.

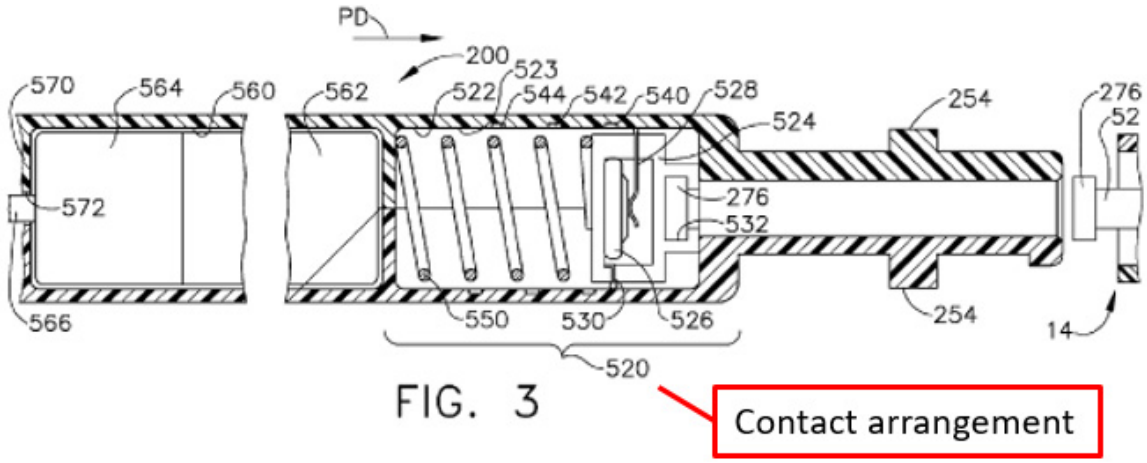

In this example, the contact arrangement is simply two or more electrical contacts at predetermined locations. IS1003, ¶ 70.

The proposed BRI is also consistent with the plain meaning of "contact" and "arrangement." IS1003, ¶ 71; IS1011, 7 (defining "contact" to mean "the junction or touching surface of two electrical conductors through which a current passes"), 6 (defining "arrangement" to mean "a structure or combination of things arranged in a particular way or for a specific purpose: combination").

C. "Means for fastening tissue on each side of a cut line" (claim 8)

This claim element includes the words "means for" and therefore presumptively invokes 112/6. The claimed function performed by the "means" is "fastening tissue on each side of a cut line." IS1001, Claim 8. The corresponding structures include staples. *E.g.*, IS1001, 25:18-39; IS1003, ¶ 74.

VIII. SUMMARY OF HEINRICH

Heinrich discloses an actuation assembly 612 and a robotic arm 616 removably attached to a motor powered disposable loading unit 618 that can be a surgical stapler. *See, e.g.*, IS1005, ¶¶ 132, 140, Figs. 7, 9. "Disposable loading unit 618 . . . includes a head portion 640 for housing an electro-mechanical assembly 619 (see Fig. 8) therein for operating surgical instrument 620 and an attachment platform 642 for releasably attaching disposable loading unit 618 to robot 618 via mounting flange 636." IS1005, ¶ 134; *see also* Claim 37.

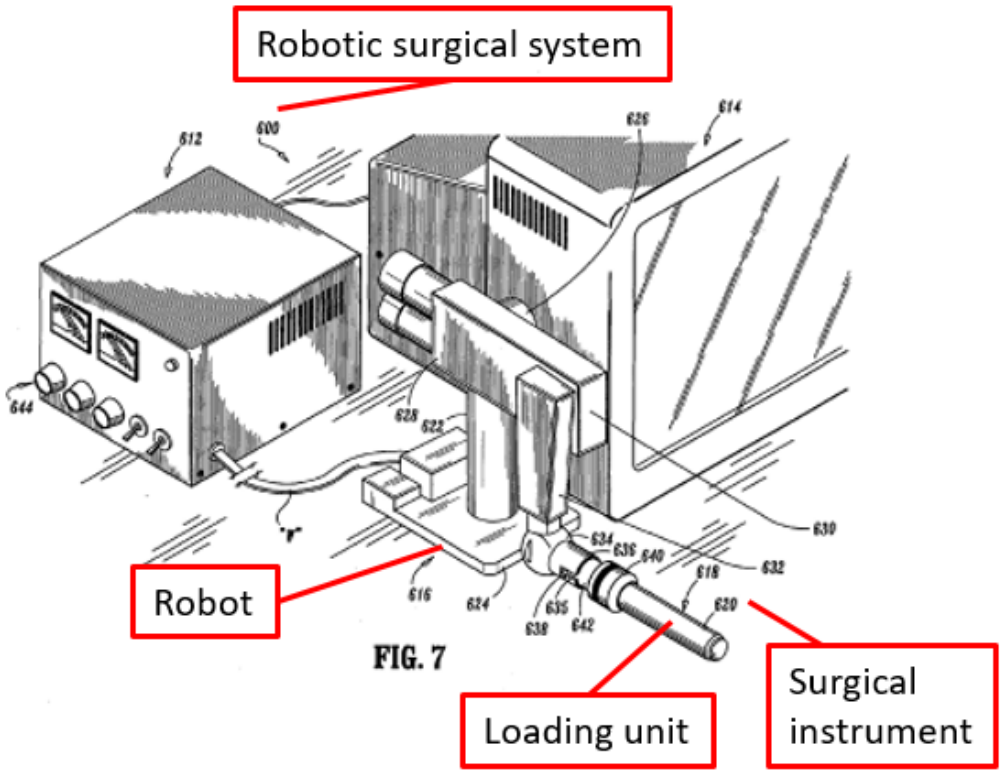

The motor (*i.e.*, electro-mechanical assembly 619) residing in the disposable loading unit 618 is disconnected from its power source in the robotic surgical system 600 when the disposable loading unit 618 is not attached to the robotic

surgical system 600, and is connected to the power source when the disposable loading unit 618 is attached to the robotic surgical system 600. *See, e.g.*, IS1005, ¶ 134, Fig. 8; IS1003, ¶ 78. Thus, the motor can receive power only when the disposable loading unit is connected to the robotic surgical system.

Like the '601 patent, Heinrich incorporates by reference the entire contents of Milliman for a more detailed explanation of the operation the surgical stapler. IS1006, ¶ 99; IS1003, ¶ 76. Specifically, Milliman discloses an endoscopic surgical cutting and stapling apparatus 10 comprising disposable loading units 16 that are capable of applying lines of staples to tissue while cutting the tissue between those staple lines. *E.g.*, IS1006, 16:20-36, Fig. 1.

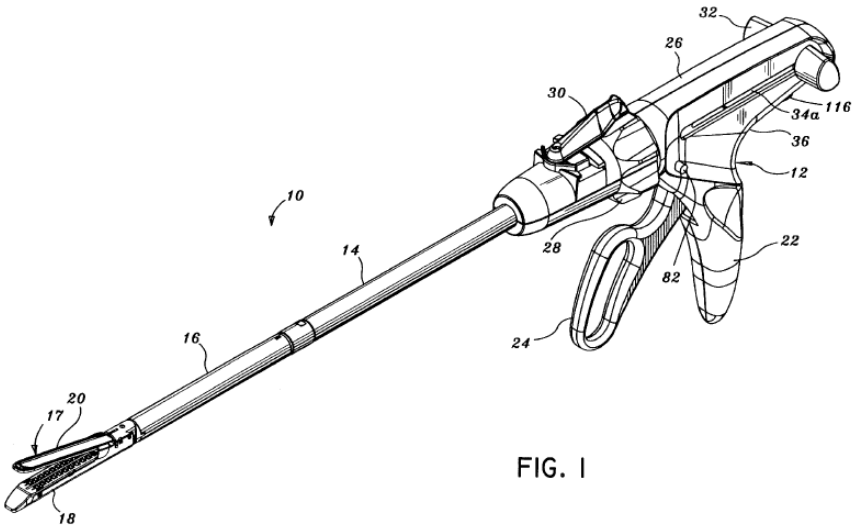

FIG. 1

Milliman also discloses an axial drive assembly 212 that includes a drive beam 266 that supports a knife blade 280, a camming pin 286, and an abutment surface 283 that engages the central portion of a sled during a stapling procedure. IS1006, 12:53-67, Figs. 32-34, 49.

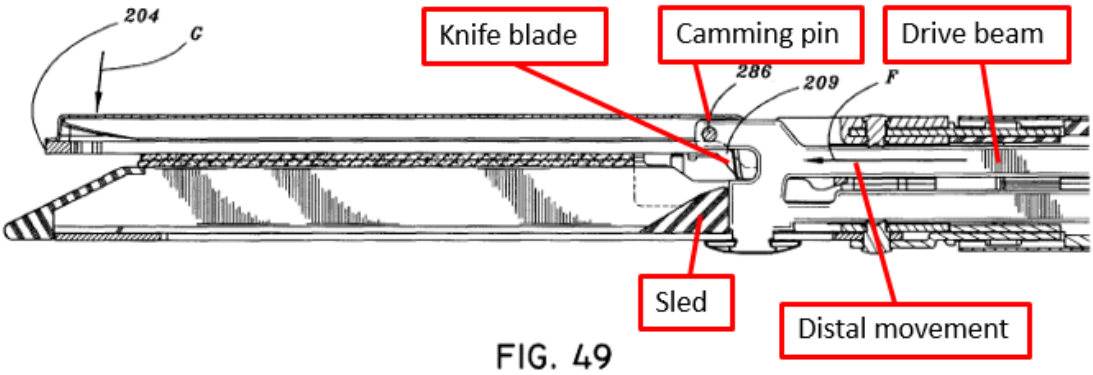

FIG. 49

And Milliman discloses the internal structure of the surgical stapler, including its carrier 216 and removable staple cartridge 220. IS1006, 11:24-54, Fig. 21.

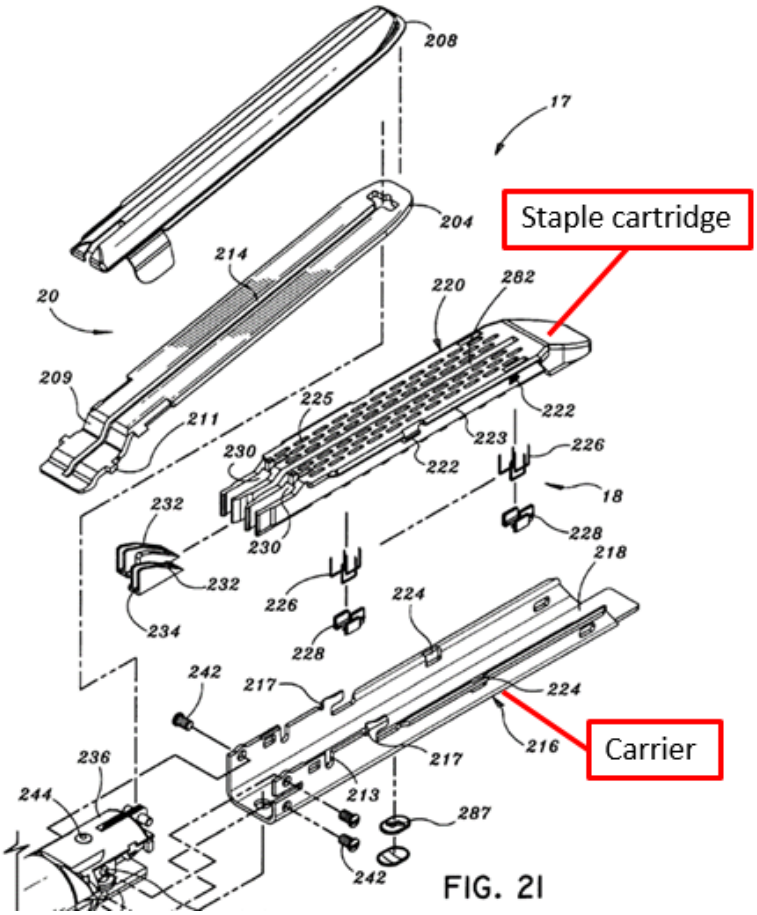

FIG. 21

IX. THERE IS A REASONABLE LIKELIHOOD THAT AT LEAST ONE CLAIM OF THE '601 PATENT IS UNPATENTABLE

For the reasons explained below, claims 1-20 of the '601 patent are invalid.

A. Ground 1: Heinrich anticipates claims 1-2, 4-6, 8-11, 13, and 15-20 under § 102(b)

[1.1] A surgical cutting and stapling instrument comprising:

If this preamble is deemed to be a limitation, Heinrich discloses it. IS1003, ¶¶ 93-101. In Heinrich, "[i]t is contemplated that the surgical instrument is a surgical stapler . . . ." IS1005, ¶¶ 14, 42. Fig. 1 of Heinrich shows surgical stapler 100, which a POSITA would have understood to be a "surgical cutting and stapling instrument."

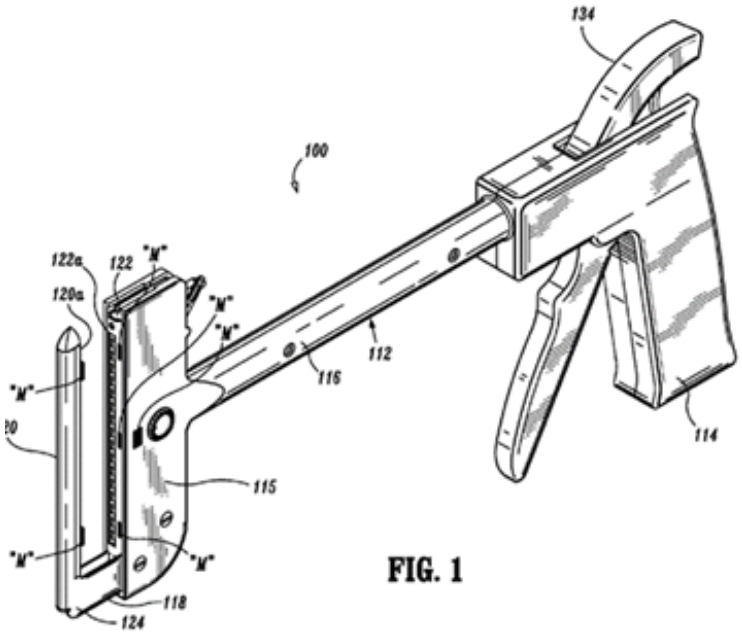

FIG. 1

Figs. 3 and 3A of Heinrich show another surgical stapler 300, which a POSITA would have understood to be "a surgical cutting and stapling instrument." *See also* IS1005, ¶¶ 88-91, Fig. 2 (disclosing surgical stapler 200).

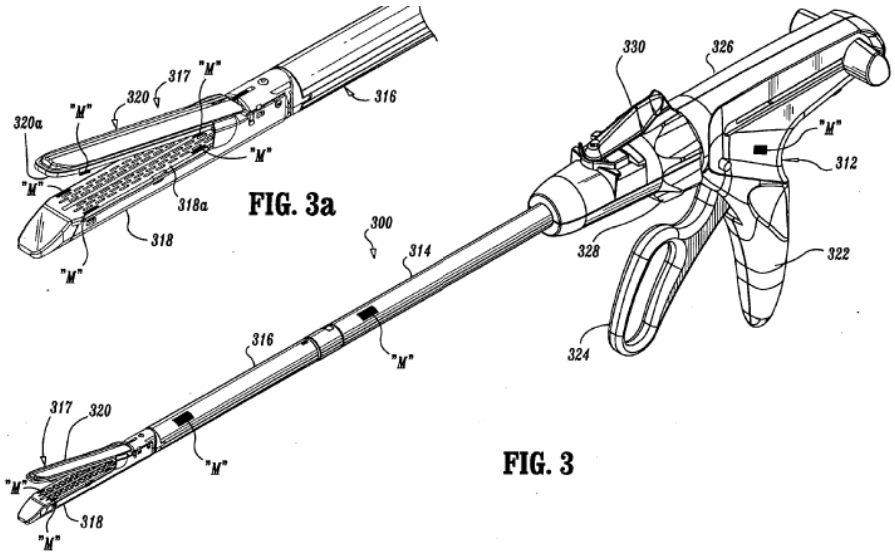

Heinrich broadly and unequivocally states that, "the entire contents of [Milliman] are incorporated herein by reference, for a more detailed explanation of the operation of surgical stapler 300." IS1005, ¶ 99. This statement incorporates all of Milliman into Heinrich as if it were set out expressly rather than through incorporation. *See, e.g., Harari v. Lee*, 656 F.3d 1331, 1335 (Fed. Cir. 2011) (holding that "the broad and unequivocal language" stating that "[t]he disclosures of the two applications are hereby incorporate[d] by reference" incorporated the entire disclosures of the two applications);[5] *Advanced Display Sys., Inc. v. Kent*

[5] *See also Biscotti Inc. v. Microsoft Corp.*, No. 2:13-CV-01015-JRG-RSP, 2017 U.S. Dist. LEXIS 144164, at *12 (E.D. Tex. May 11, 2017) (confirming that *Harari*, which addressed incorporation by reference in the context of written description, also applies to anticipation because "[t]he incorporation by reference doctrine . . . does not vary across different applications of the doctrine.").

State Univ., 212 F.3d 1272, 1282 (Fed. Cir. 2000) ("Material not explicitly contained in [a] single, prior art document may still be considered for purposes of anticipation if that material is incorporated by reference into the document."); *see also* IS1003, ¶ 76 (confirming that a POSITA would understand Heinrich to incorporate all of Milliman). Notably, the '601 patent also incorporates by reference Milliman's description of "[t]he construction and general operation of [this] cutting and stapling apparatus . . . ." IS1001, 10:67-11:3.

In Heinrich, "[i]t is envisioned that the above described surgical instruments [(*e.g.*, the disposable loading unit shown in Fig. 3a of Heinrich)] . . . can be employed with or interface directly with a robotic surgical system 600," which is shown below in Fig. 7. IS1005, ¶ 130, Fig. 7.

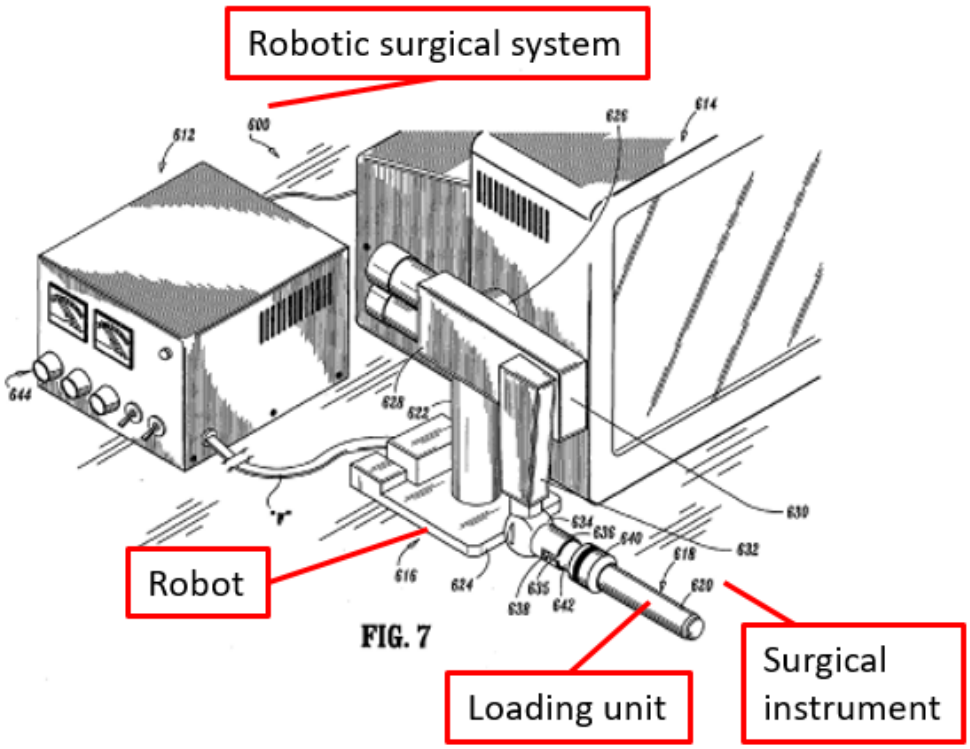

"As seen in Fig. 7, robotic surgical system 600 includes . . . a loading unit 618 releasably attached to robot 616 and having at least one surgical instrument 620." IS1005, ¶ 132. "As used [in Heinrich], 'loading unit' is understood to include disposable loading units (e.g., DLU's) and single use loading units (*e.g.*, SULU's) . . . having a shaft 316, a cartridge assembly 318 and an anvil [320] (*see, e.g.*, FIG. 3 [(above),] . . . 618 in FIGS. 7 and 718 in FIG. 9)." IS1005, ¶ 133, Figs. 3, 7, 9.

Thus, it would have been clear to a POSITA that a loading unit 618 "having a shaft 316, a cartridge assembly 318 and an anvil [320]" could be operatively connected to robot 616 as shown below in the <u>composite</u> image of Figures 3a and 9 from Heinrich. IS1003, ¶ 77, 97.

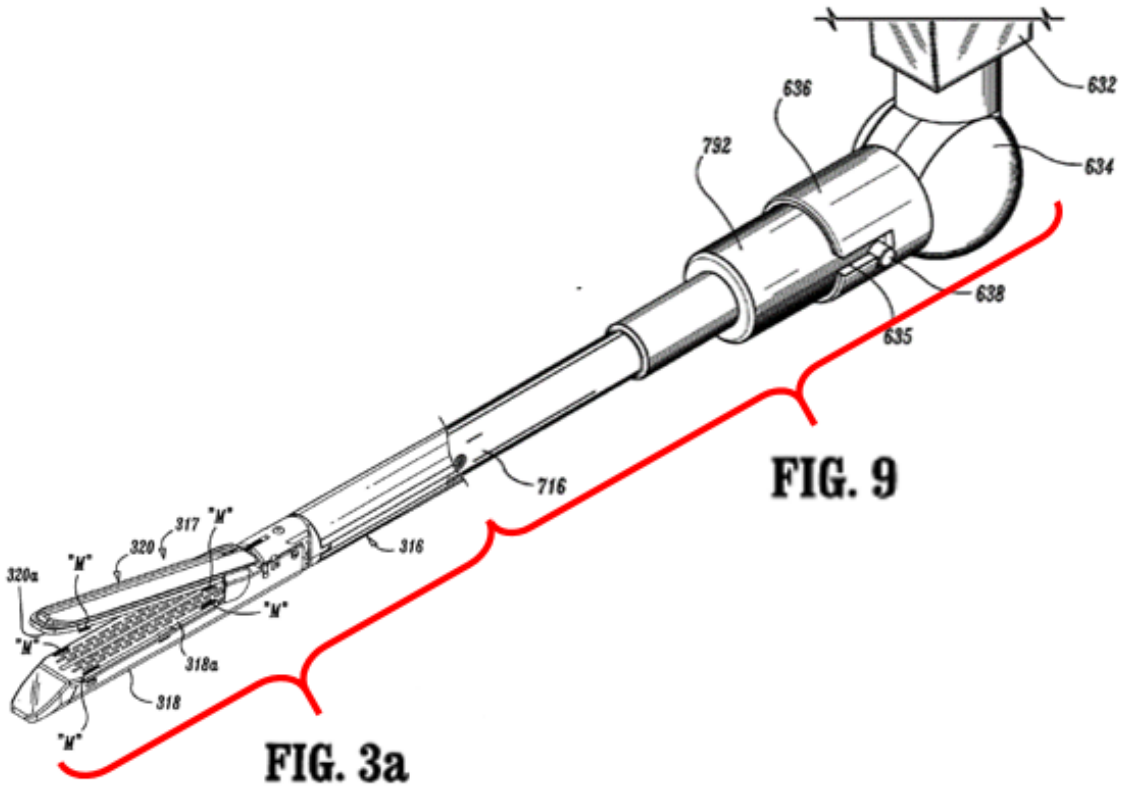

Moreover, a POSITA would have understood that Heinrich discloses this device and would have been able to implement it. *Id*. As noted above, Heinrich explicitly states that "the above described surgical instruments [(*e.g*., the disposable loading unit of surgical stapler 300)] . . . can be employed with or interface directly with a robotic surgical system 600." IS1005, ¶ 130. Heinrich also explicitly states that the generic loading unit 618 shown in Fig. 7 above "include[s] . . . those having a shaft 316, a cartridge assembly 318 and an anvil 320 (see, e.g., Fig. 3 . . .)" (*i.e*., the disposable loading unit of surgical stapler 300). IS1005, ¶ 133. And, as shown below, Heinrich provides several examples of surgical tools modified to interface directly with robotic surgical system 600. *Compare* IS1005, Figs. 1, 5, 6 *with* IS1005, Figs. 9, 11, 10, respectively; *see also* IS1005 at ¶ 139 ("By way of example only, as shown in FIG. 9, a disposable loading unit 718 [], including an end effector of a surgical stapler, similar to the end effector of surgical stapler 100 described above, is operatively connected to robot 616 (see FIG. 7) . . . ."); *Blue Calypso, LLC v. Groupon, Inc*., 815 F.3d 1331, 1344 (Fed. Cir. 2016) ("a reference need not always include an express discussion of the actual combination to anticipate. Instead, a reference may still anticipate if that reference teaches that the disclosed components or functionalities may be combined and one of skill in the art would be able to implement the combination.").

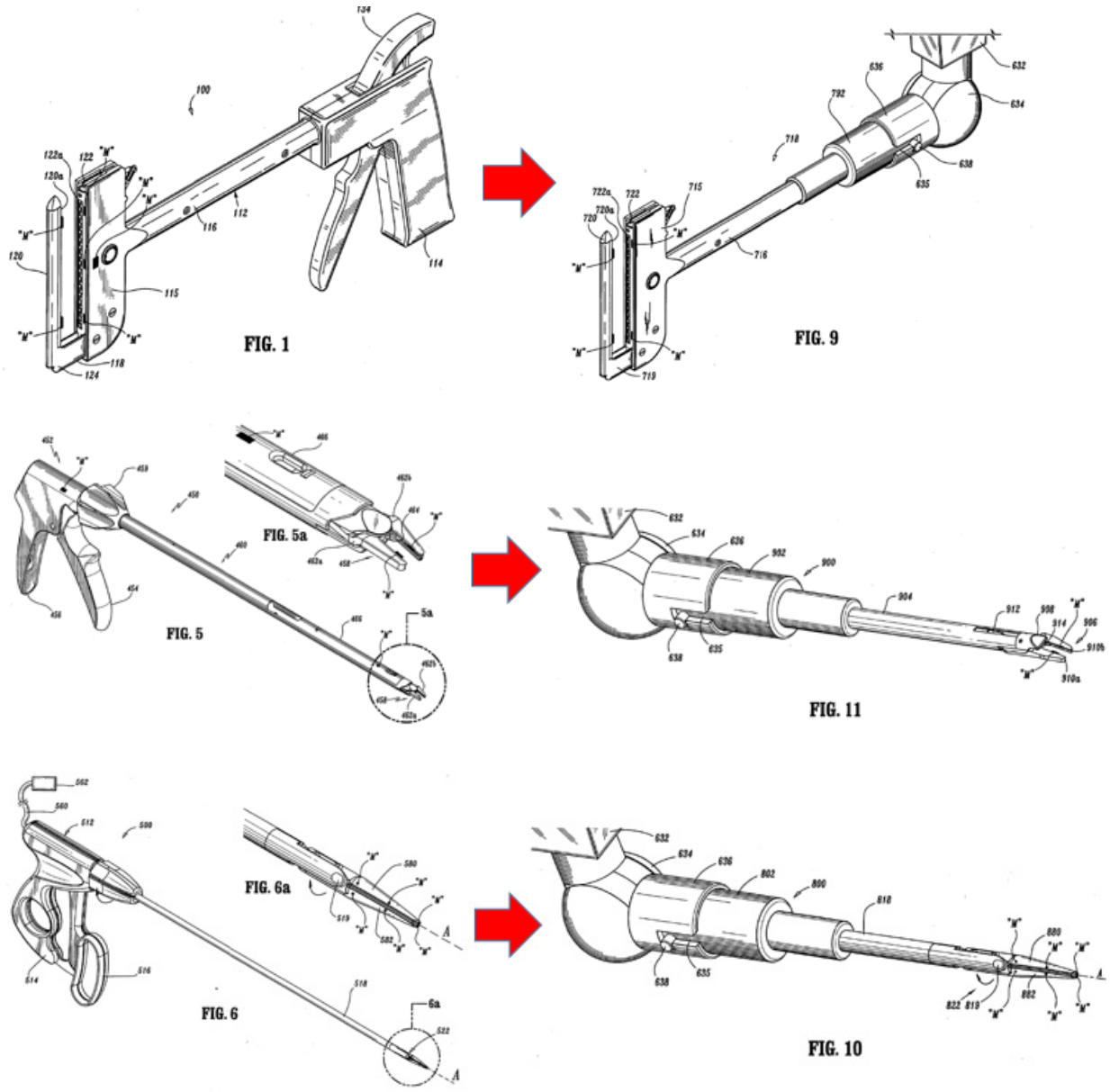

[1.2] a housing including at least one engagement member for removably coupling the housing to an actuator arrangement

"Housing"

Heinrich discloses this limitation. IS1003, ¶ 102. The housing of head portion 640 of disposable loading unit 618 houses electro-mechanical assembly 619 (*i.e.*, the motor). IS1005, ¶ 134 ("Disposable loading unit 618 further includes a head portion 640 for housing an electro-mechanical assembly 619 (*see* FIG. 8) . .

. .”). Fig. 7 of Heinrich shows the housing of disposable loading unit 618.

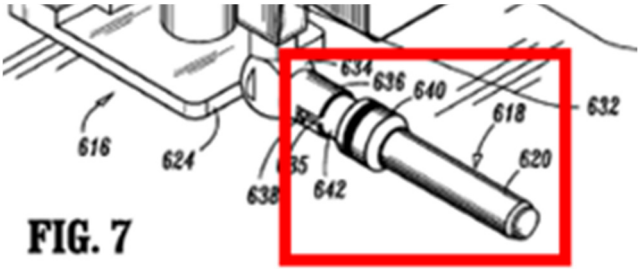

FIG. 7

See also IS1005, Fig. 8 (showing electromechanical assembly 619 within disposable loading unit 618), Fig. 9 (showing another example of disposable loading unit 618 (*i.e.,* loading unit 718)), ¶ 140 (explaining that “loading unit 718 includes an actuator incorporated within a head portion 792”).

“<u>Actuator arrangement</u>”

Although the scope of this term is unclear, Heinrich discloses this limitation. IS1003, ¶ 103. Heinrich discloses “actuation assembly 612” and “robot 616.” *See, e.g.*, IS1005, Fig. 7.

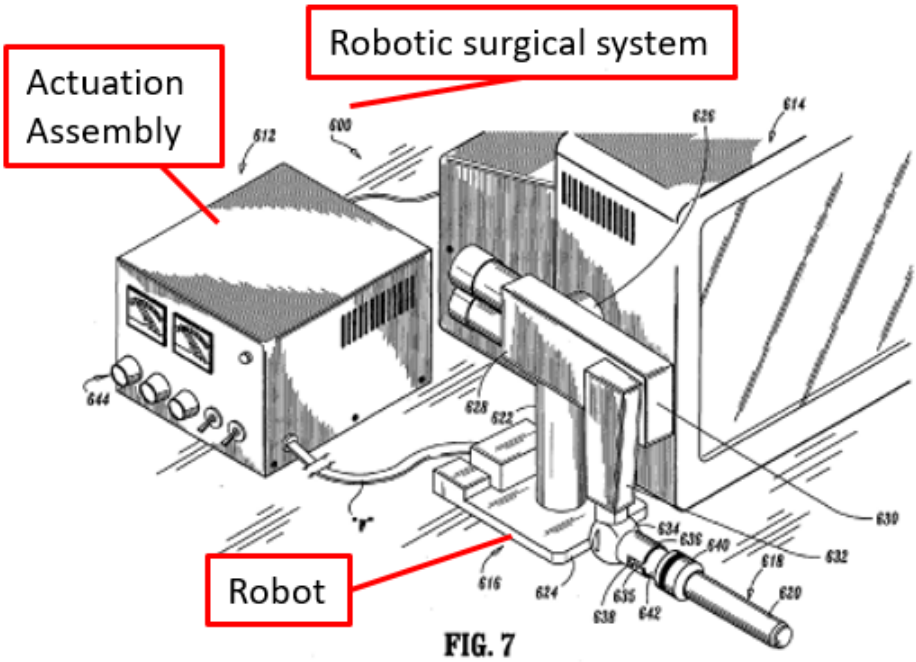

FIG. 7

These components, like robotic system 1000 in the '601 patent, are mechanisms for controlling and moving (*i.e.*, "actuating") loading unit 618 indirectly instead of by hand. IS1003, ¶ 103; IS1005, ¶ 136 ("In operation, the user (*e.g.*, surgeon, nurse, technician, etc.) controls actuation assembly 612 to control the movement and operation of robot 616 and disposable loading unit 618 . . . .").

"<u>Engagement member for removably coupling the housing to an actuator arrangement</u>"

Heinrich discloses this limitation. IS1003, ¶¶ 104-106. Heinrich discloses an engagement member (*i.e.*, attachment platform 642 with protrusions 638) for removably coupling the housing of disposable loading unit 618 to an actuator arrangement (*i.e.*, actuation assembly 612 and robot 616). IS1005, ¶ 134 ("Disposable loading unit 618 . . . includes . . . an attachment platform 642 for releasably attaching disposable loading unit 618 to robot 616 via mounting flange 636. Mounting flange 636 preferably includes two slots 635 which inter-engage with protrusions 638 of platform 642 to connect to mounting flange 636 with disposable loading unit 618."). Figs. 7 and 9 of Heinrich (IS1005) show attachment platform 642 with protrusions 638.

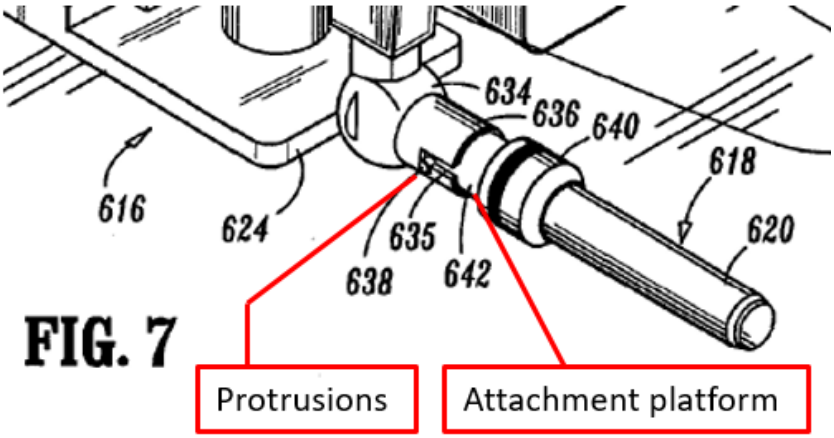

FIG. 7

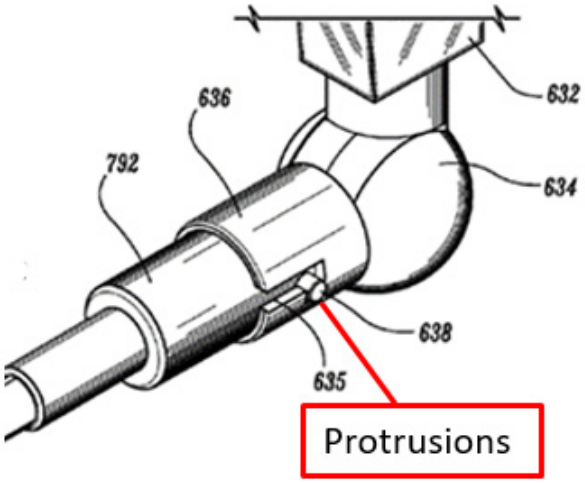

FIG. 9

Like engagement nubs 254 in the ’601 patent, which couple disposable loading unit 16 to the actuator arrangement (*i.e.*, handle assembly 12), protrusions 638 in Heinrich couple attachment platform 642 of disposable loading unit 618 to the mounting flange 636 of the actuator arrangement (*i.e.*, robot portion 616). IS1003, ¶ 104.

[1.3] first and second jaws operably coupled to the housing such that at least one said jaw is selectively movable relative to the other said jaw

"First and second jaws"

Heinrich discloses this limitation. IS1003, ¶ 105. In Heinrich, "[i]t is envisioned that the end effector is a jaw mechanism including a pair of jaw members pivotably coupled to the distal end of the elongate shaft." IS1005, ¶¶ 17, 45, Figs. 1-3, 5-6, 9-12. The first jaw is "anvil 320" and the second jaw is "cartridge assembly 318."

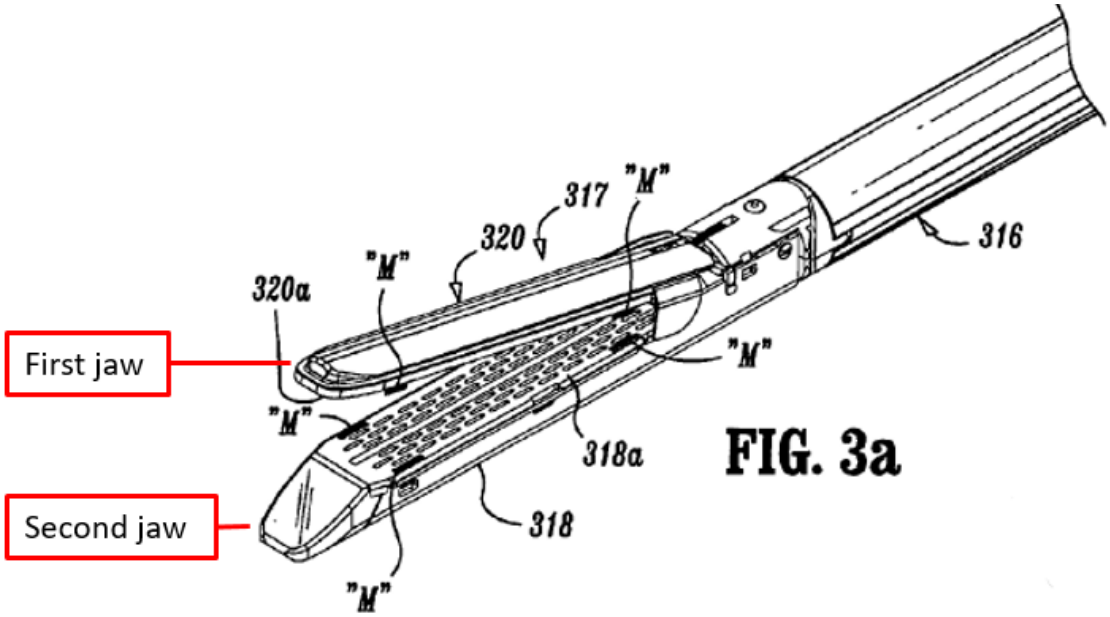

"Operatively coupled to the housing"

Heinrich discloses this limitation. IS1003, ¶ 106. In Heinrich, "the end effector [(*i.e.*, surgical stapler)] is operatively connected to and part of the loading unit [317, 618] . . . ." IS1005, Claim 18; *see also* ¶ 139 ("end effector of a surgical stapler"), ¶ 99 (incorporating the Milliman '361 patent by reference), Figs. 3, 7;

IS1006, Fig. 21. As shown above in Figure 3a of Heinrich, the first jaw (anvil 320) and the second jaw (cartridge assembly 318) are operatively coupled to the housing 316 of the disposable loading unit. IS1005, Fig. 3a; IS1003, ¶ 106.

"At least one said jaw is selectively movable relative to the other said jaw"

Heinrich discloses this limitation. IS1003, ¶ 107. In Heinrich, "anvil 320 [(*i.e.*, at least one said jaw) is] movably secured in relation to staple cartridge assembly 318 [(*i.e.*, the other said jaw)]." IS1005, ¶ 92.

[1.4] an axial drive assembly movably supported for selective axial travel relative to said first and second jaws

"Axial drive assembly"

Heinrich discloses this limitation. IS1003, ¶¶ 108-10. Heinrich, by incorporating Milliman's "detailed explanation of the operation of surgical stapler 300," discloses "axial drive assembly 212." IS1005, ¶ 99; IS1006, 12:40-67. Figs. 31-34 of Milliman show axial drive assembly 212.

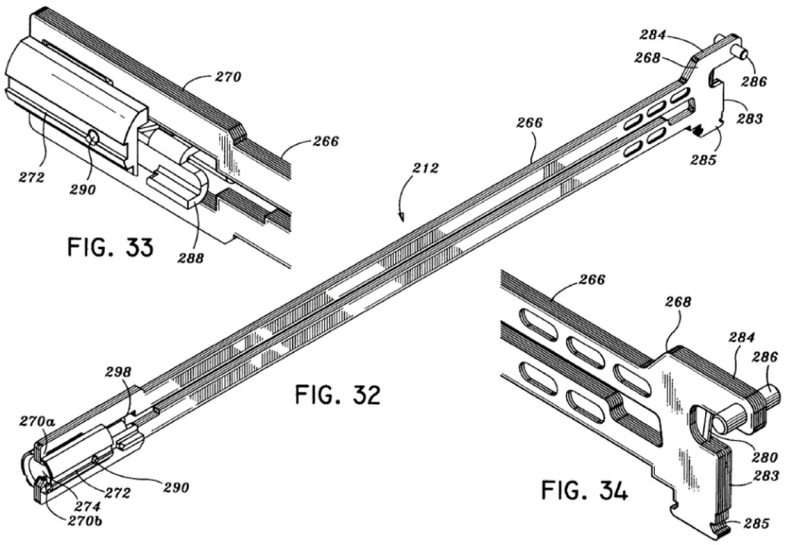

"[A]xial drive assembly 212 includes an elongated drive beam 266 including a distal working head 268 and a proximal engagement section 270. Drive beam 266 may be constructed from a single sheet of material or, preferably, multiple stacked sheets." IS1006, 12:40-67. "The distal end of drive beam 266 . . . supports a knife blade 280, and an abutment surface 283 which engages the central portion of actuation sled 234 during a stapling procedure." *Id.* "A retention flange 284 . . . supports a cylindrical cam roller 286 at its distal end." *Id.*

Furthermore, "[c]ontrol rod 52 is connected at its distal end to axial drive assembly 212 (FIG. 48), including drive beam 266, such that distal movement of control rod 52 effects distal movement of drive beam 266 in the direction indicated by arrow 'F' in FIGS. 48 and 49 . . . ." IS1006, 14:1-7.

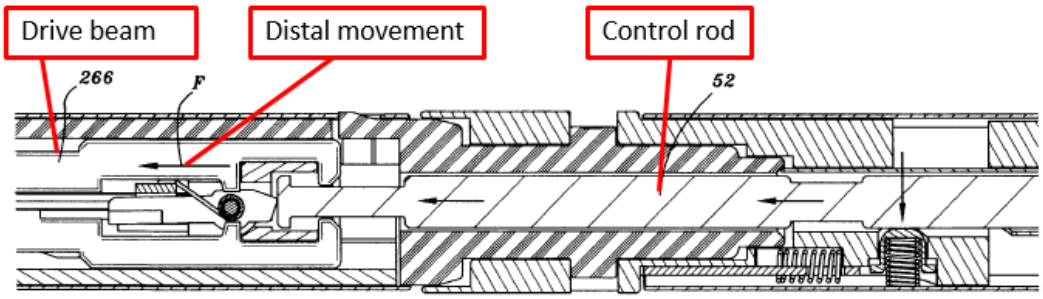

FIG. 48

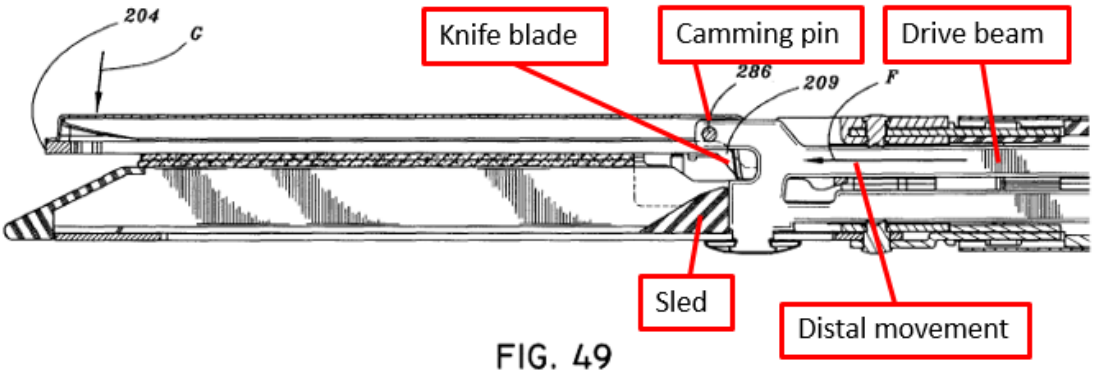

FIG. 49

"Movably supported for selective axial travel relative to said first and second jaws"

Like "axial drive assembly 212" in the '601 patent, "axial drive assembly 212" in Heinrich, which, as explained above, is essentially identical to the '601 patent's axial drive assembly 212, is movably supported. IS1003, ¶¶ 111-13. For example, "[a] longitudinal slot 214 extends through anvil portion 204 to facilitate passage of retention flange 284 of axial drive assembly 212 into the anvil cavity 210." IS1006, 11:33-35. And "[h]ousing halves 250 and 252 define a channel 253 for slidably receiving axial drive assembly 212." IS1006, 12:15-22, Fig. 27.

This support allows Heinrich's axial drive assembly 212 to travel axially relative to the first jaw (*i.e.*, anvil 320) and the second jaw (*i.e.*, cartridge assembly 318). For example, "distal movement of control rod 52 effects distal movement of drive beam 266 in the direction indicated by arrow 'F' in FIGS. 48 and 49" (*i.e.*, along an axis). IS1006, 14:3-13. As shown below, the movement of axial drive assembly 212 is relative to the first and second jaws of the surgical stapler.

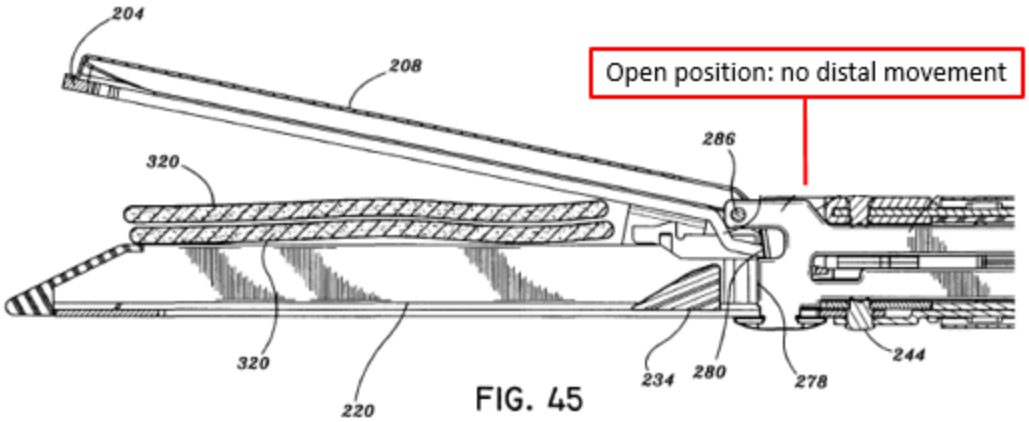

FIG. 45

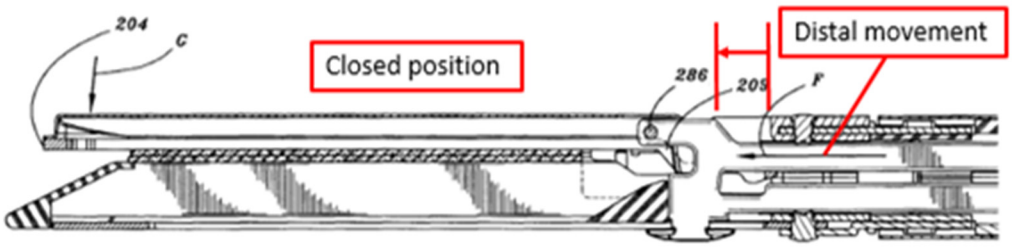

FIG. 49

IS1006, Figs. 45, 49; IS1003, ¶ 112.

Finally, the movement of Heinrich's "axial drive assembly 212" is selective. IS1003, ¶ 113. For example, "[i]n operation, the user (*e.g.*, surgeon, nurse, technician, etc.) controls actuation assembly 612 to control the movement and operation of robot 616 and disposable loading unit 618." IS1005, ¶ 136; *see also* ¶ 141 ("[R]obotic system 600 can accept the information from loading unit 718 and respond accordingly, for example, by either altering performance, making adjustments, notifying the user, modifying or stopping operation or any combination thereof."). As explained above, Heinrich's axial drive assembly 212 moves in response to these selective controls. IS1003, ¶ 113.

[1.5] a motor supported by said housing and operably interfacing with the axial drive assembly to selectively move said axial drive assembly between a starting position and an ending position relative to the first and second jaws

"<u>A motor supported by said housing</u>"

Heinrich discloses this limitation. IS1003, ¶ 114. Heinrich discloses head portion 640 of loading unit 618's housing supporting electro-mechanical assembly 619, which includes mechanisms (*e.g.*, servo motors) for selectively moving and

operating surgical instrument 620. *See, e.g.*, IS1005, ¶ 134 ("Disposable loading unit 618 further includes a head portion 640 for housing an electro-mechanical assembly 619 (see FIG. 8) therein for operating surgical instrument 620 . . . ."), ¶ 137 ("electro-mechanical assembly 619 housed within head portion 640 of loading unit 618 . . . includes mechanisms for moving and operating surgical tool instrument 620, such as, for example, servo motors . . . ."); *see also* ¶ 140 ("[L]oading unit 718 includes an actuator incorporated within a head portion 792 . . . ."). Figure 7 of Heinrich shows head portion 640.

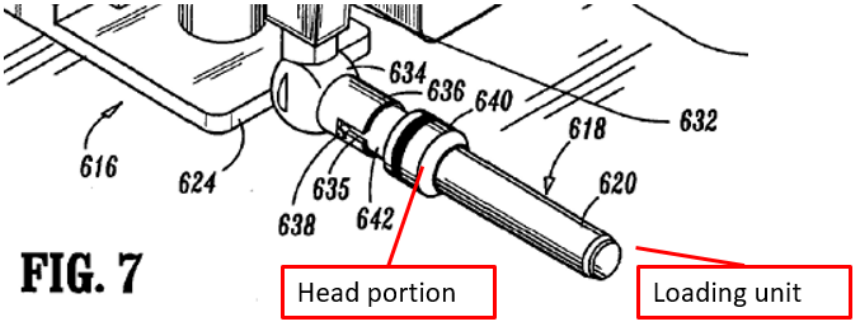

FIG. 7

Figure 8 also shows the electro-mechanical assembly 619 within loading unit 618.

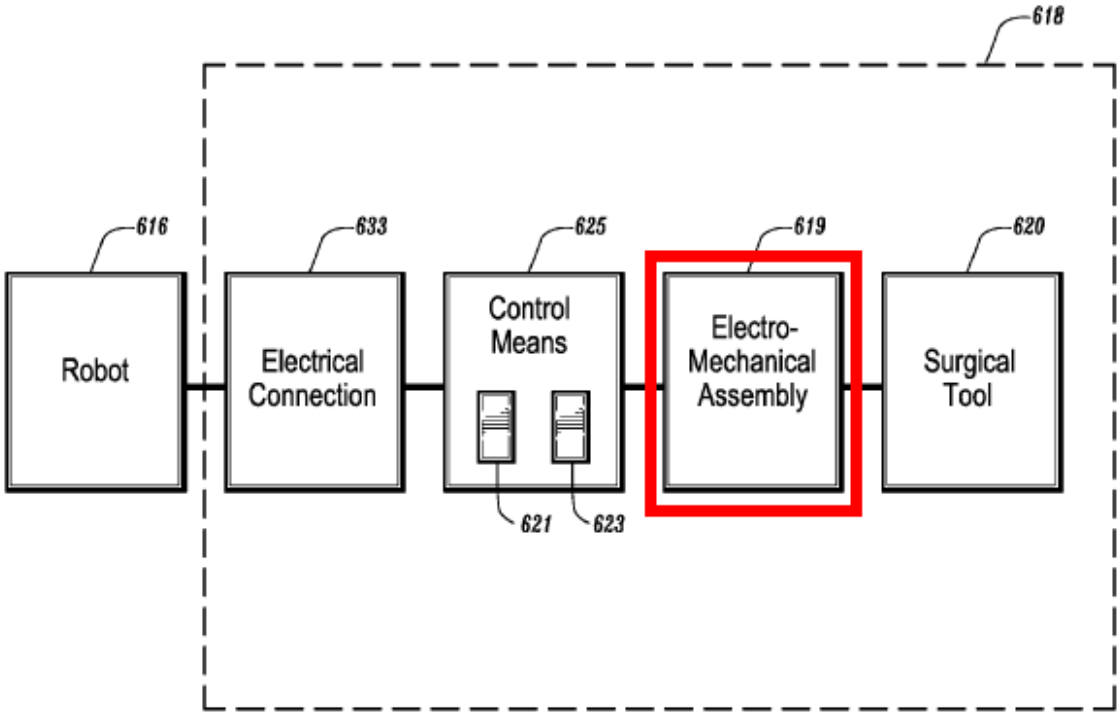

FIG. 8

Because Heinrich's motor 619 is within loading unit 618's housing, a POSITA would have understood that motor 619 "is supported by" the housing of loading unit 618. IS1003, ¶ 114.

"Operably interfacing with the axial drive assembly"

Heinrich discloses this limitation. IS1003, ¶ 115. Heinrich discloses "[e]lectro-mechanical assembly 619 [(*i.e.*, the motor), which] includes mechanisms for moving and operating surgical [] instrument 620."[6] *See, e.g.*, IS1005, ¶ 137,

[6] Heinrich uses the terms "surgical instrument 620" and "surgical tool instrument

Fig. 8. As explained above, surgical instrument 620 includes a surgical stapler containing axial drive assembly 212. Ground 1, element [1.4]. And axial drive assembly 212 is responsible for moving and operating the surgical stapler. *Id*. Thus, a POSITA would have understood that "the mechanism for moving and controlling" the surgical stapler operably interfaces electro-mechanical assembly 619 (the motor) with axial drive assembly 212 (*i.e*., connects the two components in such a manner that the components may interact with each other). IS1003, ¶ 115.

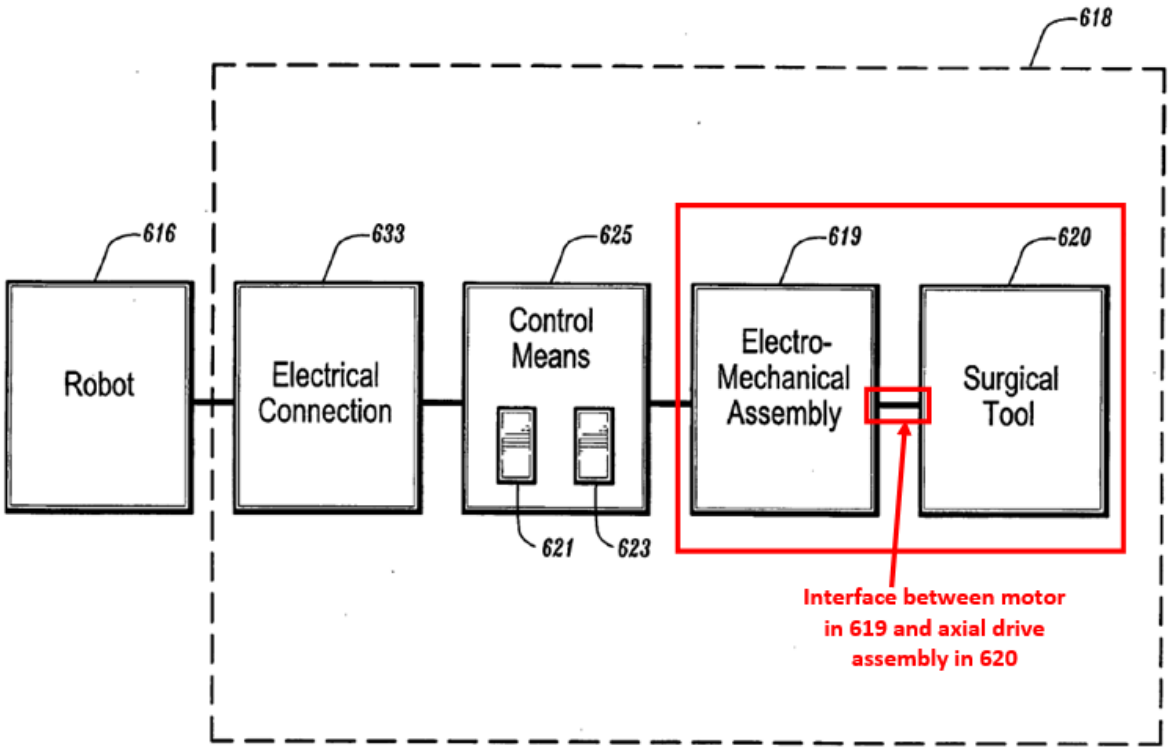

FIG. 8

620" interchangeably. *See, e.g*., IS1005, ¶ 137.

If Heinrich is deemed not to expressly disclose this limitation, then Heinrich inherently discloses an operable interface between electro-mechanical assembly 619 and axial drive assembly 212 so that the motor in electro-mechanical assembly 619 can cause the axial drive assembly 212 to move from a starting position to an ending position. IS1003, ¶ 116. As explained above, electro-mechanical assembly 619 actuates surgical instrument 620 (*i.e.*, the stapler) by moving the axial drive assembly 212, which is part of the stapler. Thus, the system must necessarily include an operable interface (*i.e.*, a connection that allows the two components to interact with each other) between electro-mechanical assembly 619 and axial drive assembly 212 to operate the stapler. *Id*.

"<u>To selectively move said axial drive assembly between a starting position and an ending position relative to the first and second jaws</u>"

Heinrich discloses this limitation. IS1003, ¶¶ 117-18. In Heinrich, actuation assembly 612 selectively actuates the stapler. *See, e.g.*, IS1005, ¶ 137 ("Actuation assembly 612 preferably is adapted to transmit electrical signals to an electro-mechanical assembly 619 housed within head portion 640 of loading unit 618 for actuating electro-mechanical assembly 619 which in turn actuates surgical instrument 620. Electro-mechanical assembly 619 includes mechanisms for moving and operating surgical tool instrument 620 . . . ."). And actuation of the stapler necessarily requires movement of axial drive assembly 212 between a

starting position (proximal; open) and an ending position (distal; closed). IS1006, 14:5-13 ("[D]istal movement of control rod 52 effects distal movement of drive beam 266 in the direction indicated by arrow 'F' in FIGS. 48 and 49, moving cam roller 286 into engagement with cam surface 209 on anvil portion 204 to urge anvil portion 204 in the direction indicated by arrow 'G' in FIG. 49."), Figs. 48 and 49).

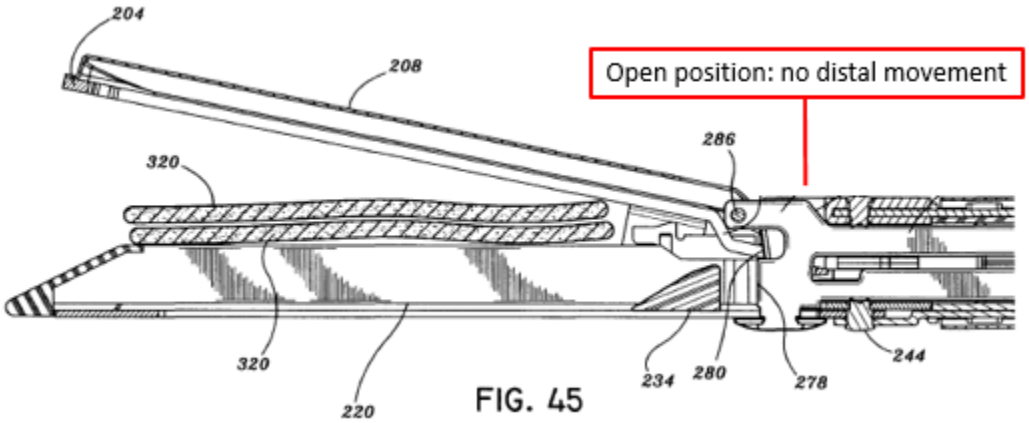

FIG. 45

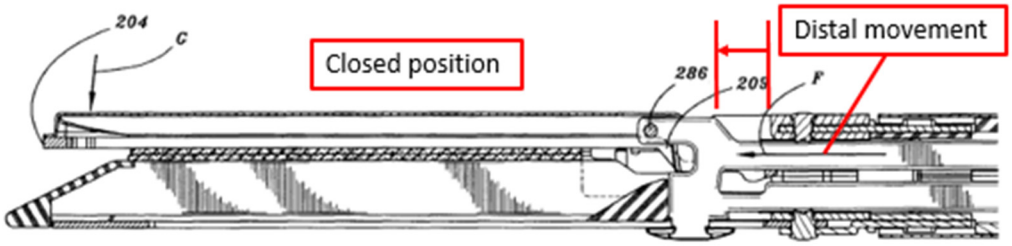

FIG. 49

Furthermore, the movement is selective because it is under the control of the user. IS1005, ¶ 136 ("In operation, the user (*e.g.*, surgeon, nurse, technician, etc.) controls actuation assembly 612 to control the movement and operation of . . . disposable loading unit 618 . . . ."); IS1003, ¶ 118.

[1.6] a contact arrangement supported by said housing and configured to permit power to be supplied to the motor only when the housing is operably attached to the actuator arrangement

"Contact arrangement . . . configured to permit power to be supplied to the motor only when the housing is operably attached to the actuator arrangement"

Heinrich discloses this limitation under the BRI. IS1003, ¶¶ 119-23; Section VII.B. Heinrich discloses "electrical connection 633," which is at least two electrical contacts "provided between slots 635 and protrusions 638" (*i.e.*, located at predetermined locations relative to each other). IS1005, ¶ 134.

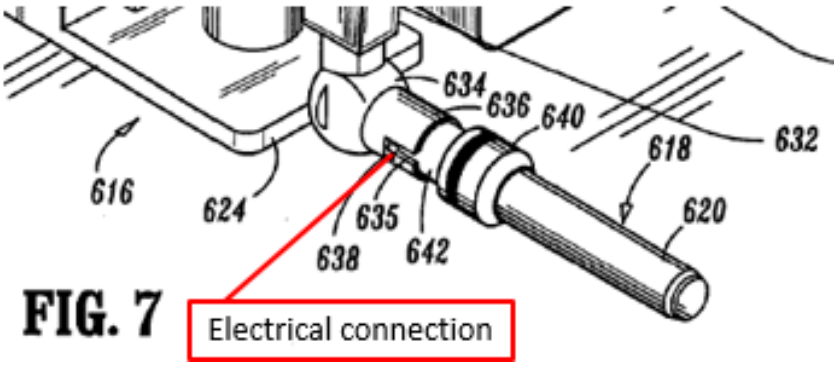

Figure 8 of Heinrich shows electrical connection 633.

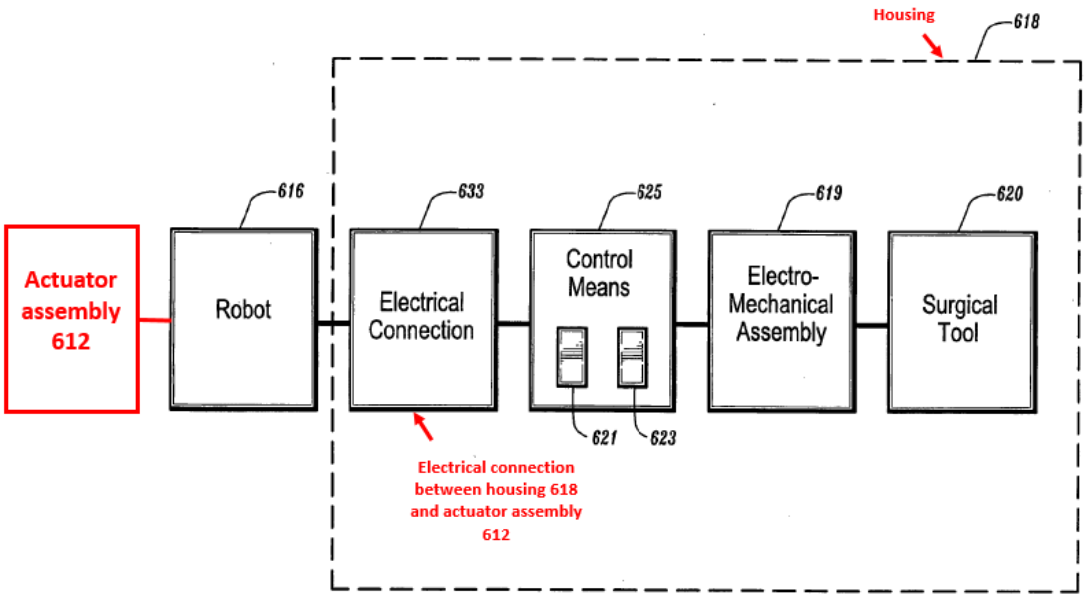

FIG. 8

Heinrich's "electrical connection 633" is configured to permit power to be supplied to the motor (*i.e.*, electro-mechanical assembly 619) only when the housing of loading unit 618 is operably attached to the actuator arrangement (*i.e.*, the robotic system 600 comprising actuation assembly 612 and robot 616). IS1003, ¶ 121. As explained above, the housing of loading unit 618 houses electro-mechanical assembly 619. However, the power supply for electro-mechanical assembly 619 is in actuation assembly 612. IS1005, ¶ 134 ("It is further contemplated that an electrical connection 633 (see FIG. 8) be provided between slots 635 and protrusions 638 in order to provide power to electro-mechanical assembly 619."); *see also* ¶ 131 ("the power and control systems [of the surgical instrument] can be integrated or interfaced with the robotic surgical

system"), Fig. 8 (showing no power source in loading unit 618). Thus, because the housing of loading unit 618 is detachable from the robotic surgical system 600, power can be supplied to electro-mechanical assembly 619 (*i.e.*, the motor) only when the housing of loading unit 618 is "operably attached" to the robotic surgical system 600. IS1003, ¶ 121.

If electrical connection 633 is deemed not to be an explicit disclosure of the claimed contact arrangement, Heinrich inherently discloses the claimed contact arrangement. IS1003, ¶ 122. As explained above, Heinrich's robotic surgical system 600 provides power to electro-mechanical assembly 619 via electrical connection 633. IS1005, ¶ 134; *see also* ¶ 131. Thus, electrical connection 633 must necessarily include at least one contact (*e.g.*, an electrical contact) arranged to transmit power between the robot 616 of robotic surgical system 600 and electro-mechanical assembly 619. IS1003, ¶ 122.

Heinrich also inherently discloses a second contact. IS1003, ¶ 123. For example, robotic surgical system 600, in addition to providing power to the instrument, "transmit[s] electrical signals to an electro-mechanical assembly 619 housed within head portion 640 of loading unit 618 for actuating electro-mechanical assembly 619 which in turn actuates surgical instrument 620."[7]

[7] A POSITA would have understood that these electrical signals are control signals

IS1005, ¶ 137; *see also* ¶ 138 ("As seen in Fig. 8, disposable loading unit 618 may further include integrated circuitry for receiving digital signals from actuation assembly 612 . . . ."). "It is [also] envisioned that MEMS devices 'M' may transmit feedback signals of the measured and/or sensed parameters to . . . actuation assembly 612 (see FIG. 7), via wire leads 560 (see FIG. 6) or transmission wires 'W' (see FIG. 7), for further processing." IS1005, ¶ 86. Consequently, electrical connection 633 must necessarily have at least one other contact (*i.e.*, for a total of at least two) in order to "transmit electrical signals" and/or "digital signals" from actuation assembly 612 to the motor and/or to "transmit feedback signals" from the MEMS devices to the actuation assembly 612. IS1003, ¶ 123.

"Supported by said housing"

Heinrich discloses this limitation. IS1003, ¶ 124. Heinrich's "electrical connection 633" is supported by the protrusions 638 from the attachment platform 642 portion of loading unit 618's housing. IS1005, ¶ 134 ("It is further contemplated that an electrical connection 633 (*see* FIG. 8) be provided between slots 635 and protrusions 638...."). Figures 7 and 9 of Heinrich show these protrusions.

---

separate from the power supply. IS1003, ¶ 125 n.1.

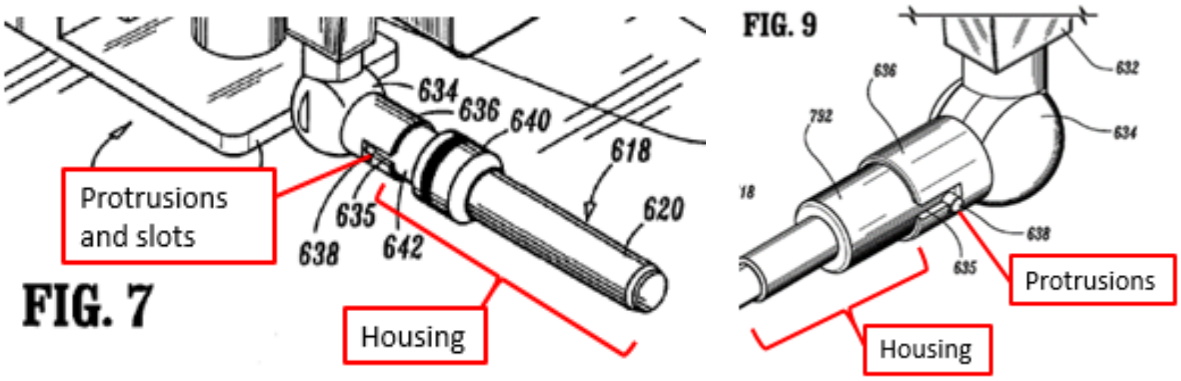

Because Heinrich's electrical connection 633 is provided between slots 635 and protrusions 638 of housing 618, a POSITA would have understood that there are electrical contacts on the surface of protrusions 638 of housing 618 to interface with contacts on the surface of slots 635, and therefore that the contacts on protrusions 638 are "supported by" housing 618. IS1003, ¶ 124.

[2] The surgical cutting and stapling instrument of claim 1 wherein one of the first and second jaws operably supports a fastener cartridge

Heinrich discloses this limitation. IS1003, ¶ 125. Heinrich discloses a "staple cartridge assembly 318," which is one of the first and second jaws, "housing [(*i.e.*, supporting)] a plurality of surgical staples." IS1005, ¶ 92.

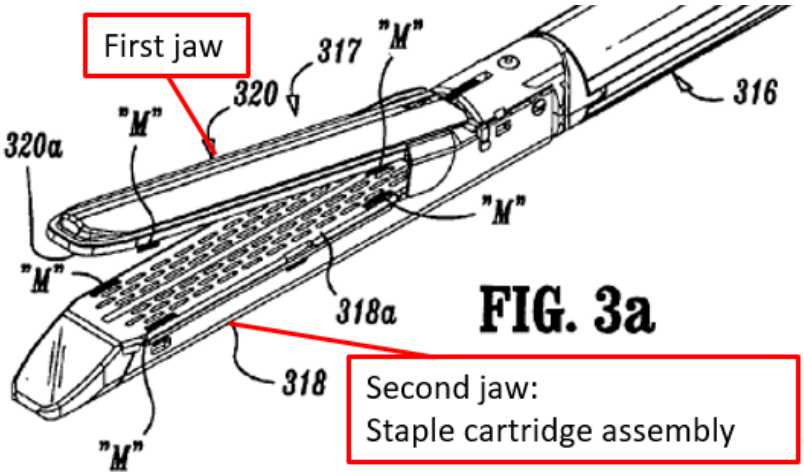

Milliman, which Heinrich incorporates by reference, discloses that cartridge assembly 318 includes "a staple cartridge 220." IS1006, 11:45-48, Figs. 21-26.

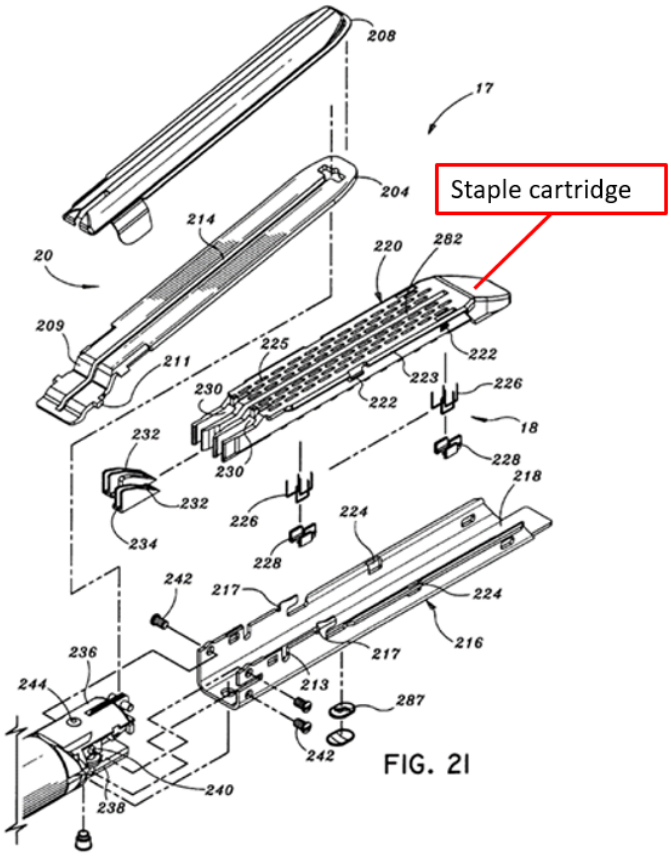

FIG. 21

[4.1] The surgical cutting and stapling instrument of claim 1 wherein said axial drive assembly comprises

See Ground 1, claim [1].

[4.2] a drive beam operably coupled to said motor

"Drive beam"

Heinrich discloses this limitation. IS1003, ¶ 127. As explained above, Heinrich by incorporating Milliman's "detailed explanation of the operation of surgical stapler 300," discloses "drive beam 266." IS1005, ¶ 99; IS1006, 12:40-56, Figs. 32-34.

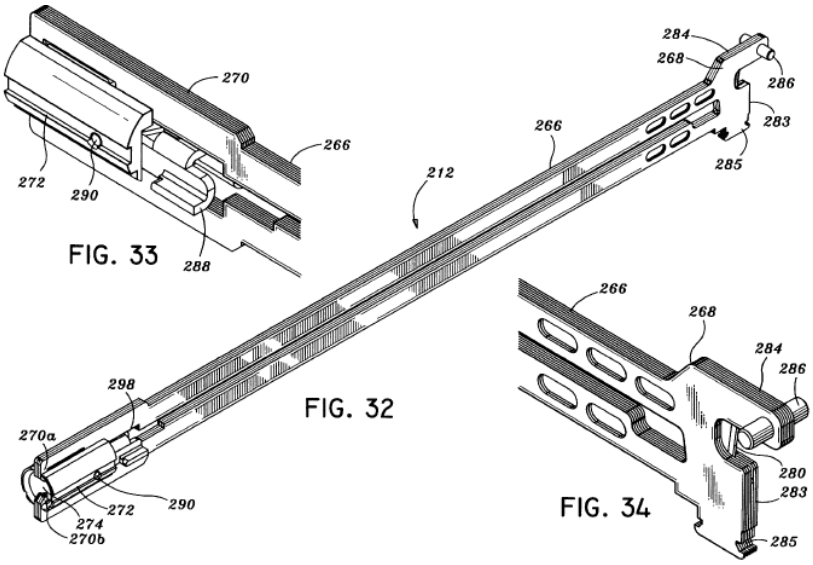

"Operably coupled to said motor"'

See Ground 1, element [1.5].

[4.3] a tissue cutting edge on said drive beam

Heinrich discloses this limitation. IS1003, ¶ 129. Axial drive assembly 212 includes "knife blade 280." IS1006, 12:40-67 ("Referring also to FIGS. 31-34, axial drive assembly 212 includes an elongated drive beam 266 . . . . The distal end of drive beam 266 is defined by a vertical support strut 278 which supports a knife blade 280 . . . .").

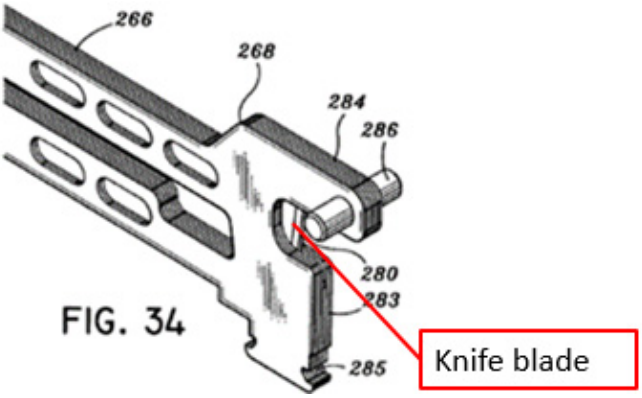

[5] The surgical cutting and stapling instrument of claim 4 wherein one of said first and second jaws comprises an anvil and the other of said first and second jaws operably supports a surgical staple cartridge therein

"One of said first and second jaws comprises an anvil"

Heinrich discloses this limitation. IS1003, ¶ 130. Heinrich discloses "anvil 320," which is one of the stapler's two jaws. IS1005, ¶¶ 35, 92, Figs. 3, 3a.

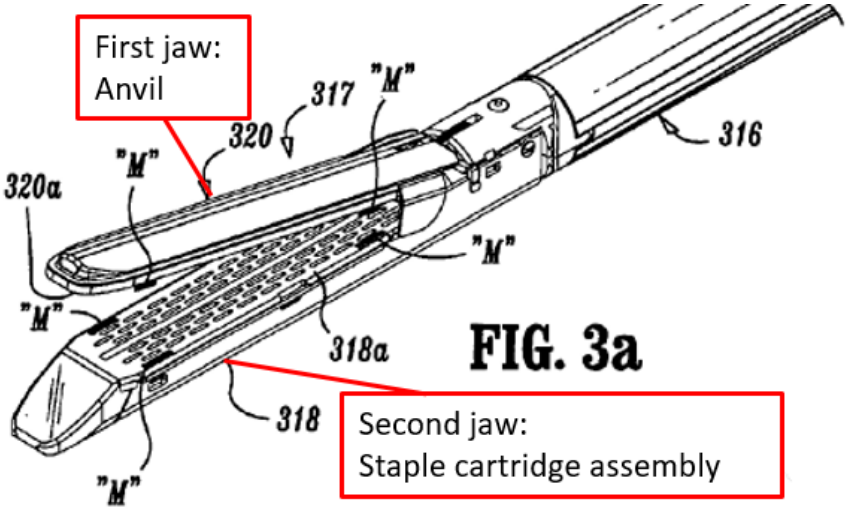

"The other of said first and second jaws operably supports a surgical staple cartridge therein"

See Ground 1, claim [2].

[6] The surgical cutting and stapling instrument of claim 5 wherein said drive beam includes at least one camming pin configured to move said anvil to a closed position when said axial drive assembly is axially driven from the starting position to the ending position

"At least one camming pin"

Heinrich discloses this limitation. IS1003, ¶ 132. Milliman, which Heinrich incorporates by reference, discloses "cam roller 286," which is at least one camming pin. *Id.*; IS1006, 12:62-67, Figs. 32, 34.

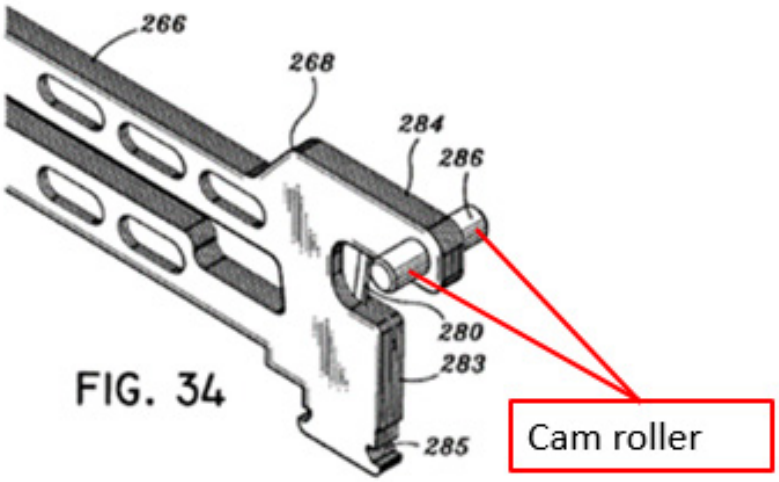

"Configured to move said anvil to a closed position when said axial drive assembly is axially driven from the starting position to the ending position"

"Cam roller 286 is dimensioned and configured to engage cam surface 209 on anvil body 204 to clamp anvil portion 204 against body tissue." IS1006, 12:65-67; *see also* 11:38-41 ("A pair of pivot members 211 formed on anvil portion 204 are positioned within slots 213 formed in carrier 216 to guide the anvil portion between the open and clamped positions."), Fig. 21 (showing the relationship between cam roller 286 and cam surface 209).

[8] The surgical cutting and stapling instrument of claim 1 wherein one of said first and second jaws comprises means for fastening tissue on each side of a cut line formed therein by a portion of the axial drive assembly

Heinrich discloses this limitation. IS1003, ¶ 134. Heinrich's "staple cartridge assembly 318 [(*i.e.*, one of the jaws] hous[es] a plurality of surgical staples" for fastening tissue on each side of a cut line formed by knife blade 280 on

axial drive assembly 212.[8] IS1005, ¶ 92, Fig. 3; *see also* IS1006, 11:55-67 ("A central longitudinal slot 282 extends along the length of staple cartridge 220[, 318] to facilitate passage of a knife blade 280. During operation of surgical stapler 10 . . . pushers 228 . . . urge fasteners 226 from slots 224 into the staple deforming cavities 206 of anvil assembly 20."), 12:59-62 ("Knife blade 280 is positioned to translate . . . through a central longitudinal slot 282 in staple cartridge 220[, 318] (FIG. 30) to form an incision between rows of stapled body tissue."). Figures 25 and 26 of Milliman, which Heinrich incorporates by reference, show the surgical staples on each side of the cut line.

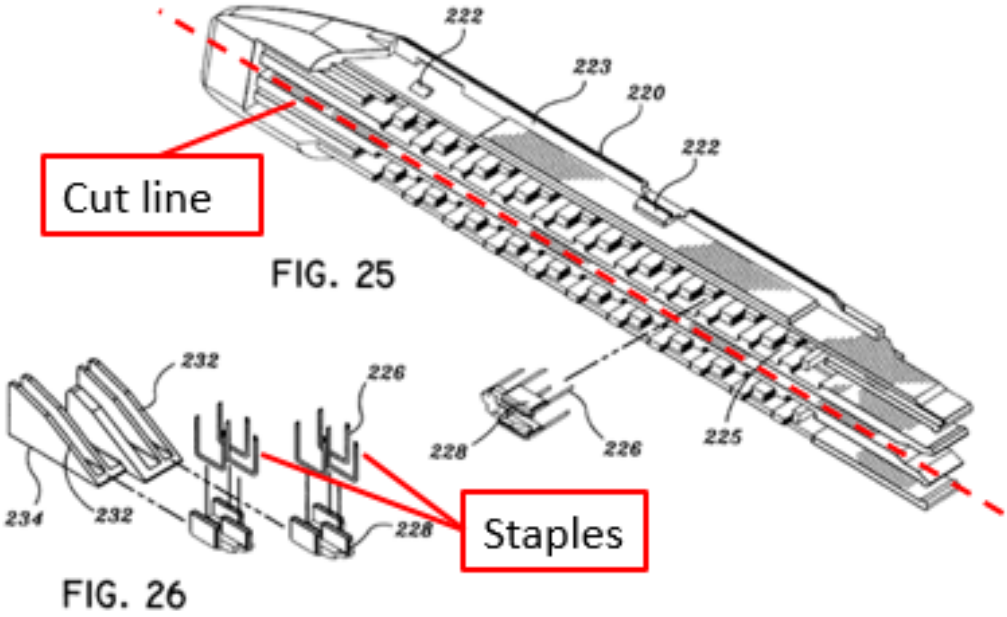

[8] As explained above, the structures corresponding to the claimed "means for fastening tissue" include staples.

[9] The surgical cutting and stapling instrument of claim 1 wherein the first and second jaws are axially displaced from a portion of the housing supporting the motor

Heinrich discloses this limitation. IS1003, ¶¶ 135-36. Heinrich's first and second jaws, which are part of instrument 620, are axially displaced from the head portion 640 of loading unit 618's housing that supports electro-mechanical assembly 619 (*i.e.*, the motor). IS1005, ¶ 134 ("Disposable loading unit 618 further includes a head portion 640 for housing an electro-mechanical assembly 619 . . . ."); *see also* ¶ 140 ("It is envisioned that loading unit 718 includes an actuator incorporated within a head portion 792 to perform fast closure and incremental advancement of staple cartridge assembly 722 with respect to anvil 720."). Figure 7 of Heinrich shows the axial displacement of the distal end of surgical instrument 620 from the head portion 640.

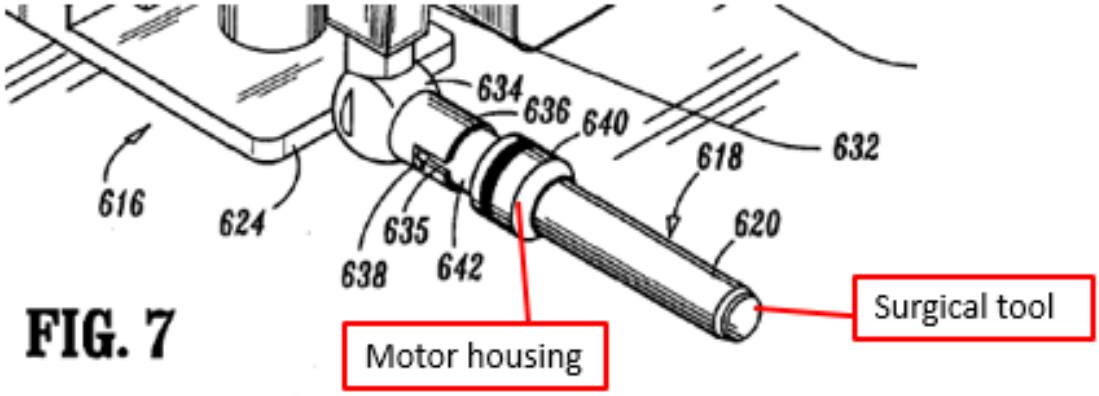

In the disclosed embodiment of Heinrich where surgical instrument 620 is the disposable loading unit 316, the first and second jaws of the stapler (*i.e.* anvil 320 and staple cartridge assembly 318) are axially displaced from the motor (*i.e.*,

electro-mechanical assembly 619) in head portion 640. IS1003, ¶ 136; *see also* IS1005, Figs. 9-12. This is shown below in the <u>composite</u> image of Figures 3a and 9 from Heinrich, which represents this disclosed example.

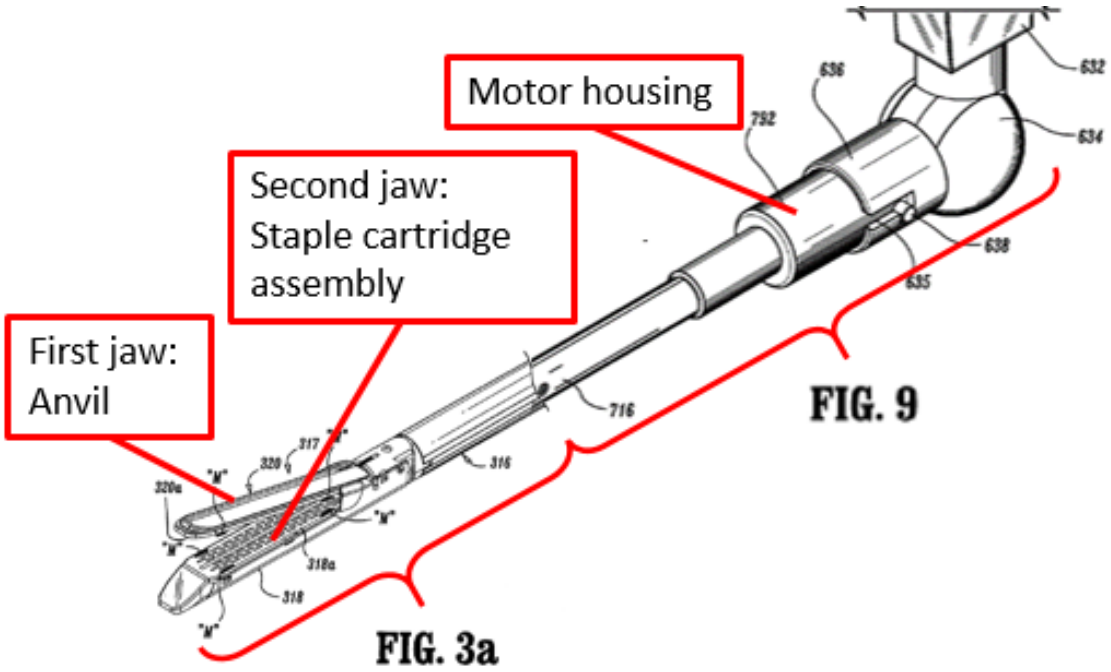

[10] The surgical cutting and stapling instrument of claim 9 comprising a shaft extending between the motor and the axial drive assembly

Heinrich discloses this limitation. IS1003, ¶¶ 137-38. In the disclosed embodiment of Heinrich where surgical instrument 620 is disposable loading unit 316, a POSITA would have understood that Heinrich discloses a shaft (*i.e.*, a "drive rod or . . . screw rod") extending between axial drive assembly 212 and the motor (*i.e.*, electro-mechanical assembly 619) to move and operate the stapler. *Id.*; IS1005, ¶ 141 ("MEMS devices 'M' can measure an associated member, such as a displacement of a drive rod or a rotation of a screw rod to determine whether the staples have been fired or not."), ¶ 137 ("Electro-mechanical assembly 619 [(*i.e.*,

motor)] includes mechanisms for moving and operating surgical tool instrument 620."), Fig. 8. Specifically, a POSITA would have understood that Heinrich's description of a "drive rod" refers to Milliman's "control rod 52." IS1003, ¶¶ 137-38; IS1005, Figs. 4, 46, 48.

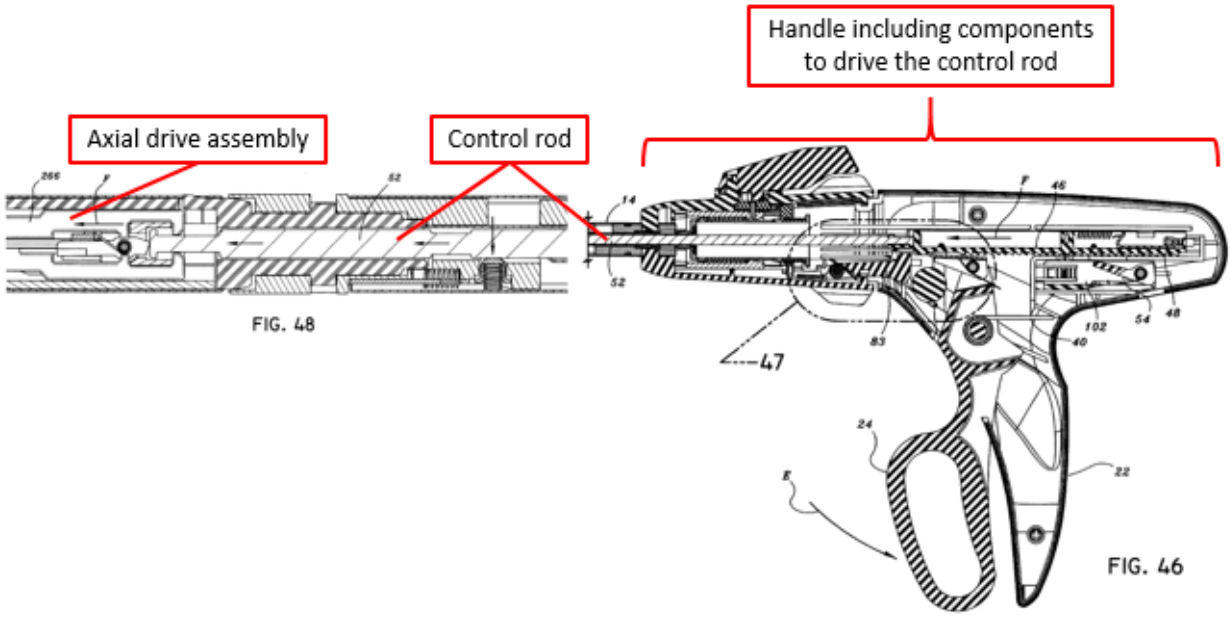

As shown above, control rod 52 extends between axial drive assembly 212 and the components of the instrument handle that drive control rod 52. *Id*. Thus, when Milliman's handle is replaced with electro-mechanical assembly 619 and robot 616, as taught by Heinrich, control rod 52 extends between the electro-mechanical assembly 619 (motor) and axial drive assembly 212. *Id*.

If Heinrich is deemed not to expressly disclose this limitation, then Heinrich inherently discloses the drive rod or screw rod extending between electro-mechanical assembly 619 and axial drive assembly 212 so that the motor in

electro-mechanical assembly 619 can drive the drive rod, or rotate the screw rod, to drive axial drive assembly 212 and operate the stapler. IS1003, ¶ 138. As explained above, electro-mechanical assembly 619 actuates surgical tool 620 (*i.e.*, the stapler), and the drive rod or screw rod, which is used to fire the stapler, must be driven or rotated by the motor to fire the stapler. *See* Ground 1, element [1.5]. Thus, the drive rod or screw rod must necessarily extend between electro-mechanical assembly 619 and axial drive assembly 212 to operate the stapler. IS1003, ¶ 138.

[11.1] A surgical cutting and stapling instrument comprising

See Ground 1, element [1.1].

[11.2] a housing including at least one engagement member for removably coupling the housing to an actuator arrangement

See Ground 1, element [1.2].

[11.3] a carrier operably coupled to the housing

Heinrich discloses this limitation. IS1003, ¶ 141. Milliman, which Heinrich incorporates by reference, discloses carrier 216 coupled to the housing portion 200 of disposable loading unit 16 by mounting assembly 202. IS1006, 11:45-46 ("Cartridge assembly 18 includes a carrier 216 which defines an elongated support channel 218."), 12:1-13 ("[M]ounting assembly 202 includes . . . a threaded bore 240 on each side thereof dimensioned to receive threaded bolts 242 (*See* Fig. 21) for securing the proximal end of carrier 216 thereto."), Figs. 21, 27-28. Figure 3a

of Heinrich shows staple cartridge assembly 318, which includes carrier 216, operably coupled to the housing of disposable loading unit 316. IS1003, ¶ 141; *see also* IS1006, Fig. 21.

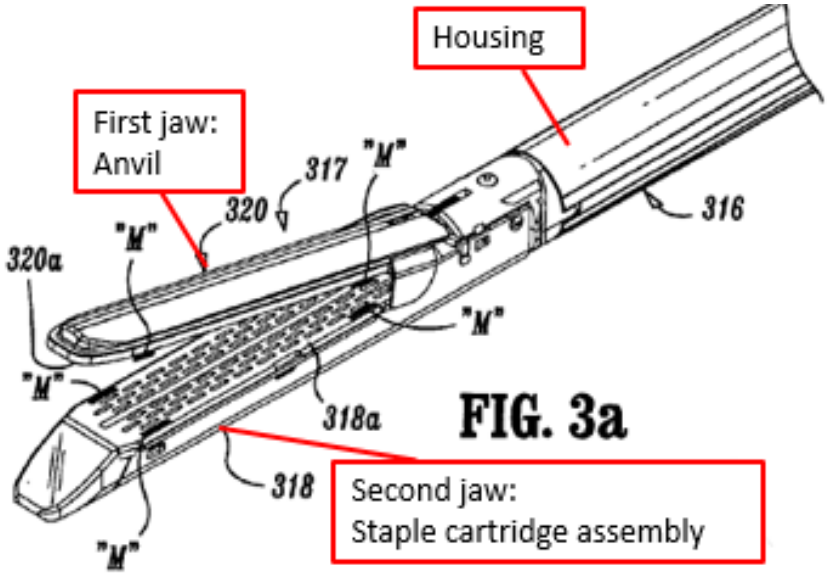

[11.4] a surgical staple cartridge operably supported in the carrier

Heinrich discloses this limitation. IS1003, ¶ 142. Milliman, which Heinrich incorporates by reference, discloses surgical staple cartridge 220 operably supported in carrier 216. IS1006, 11:45-48 ("Cartridge assembly 18 includes a carrier 216 which defines an elongated support channel 218. Elongated support channel 218 is dimensioned and configured to receive a staple cartridge 220."), Fig. 21. As shown below, Heinrich identifies the combination of staple cartridge 220 and carrier 216 as staple cartridge assembly 318. IS1005, Fig. 3a.

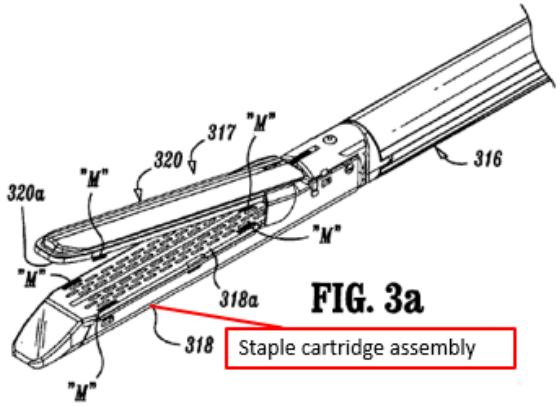

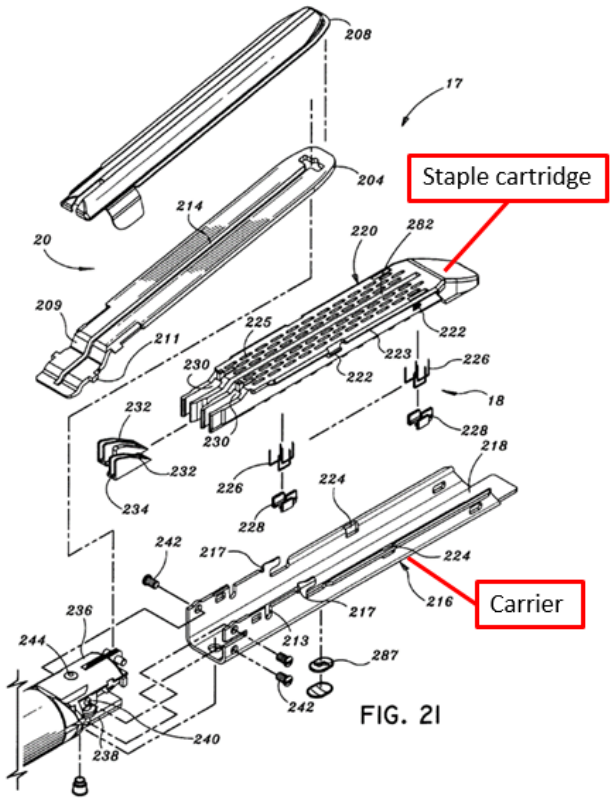

[11.5] an anvil movably supported relative to the carrier

"Anvil"

See Ground 1, claim [5].

"Movably supported relative to the carrier"

Heinrich discloses this limitation. IS1003, ¶ 144. "[A]nvil 320 [is] movably secured in relation to staple cartridge assembly 318." IS1005, ¶ 92, Fig. 3; IS1006, Fig. 21.

[11.6] a drive beam including a distal cutting edge supported for axial travel relative to the carrier

See Ground 1, claim [4].

[11.7] a motor supported by said housing and operably interfacing with the drive beam to selectively move said drive beam between a starting position and an ending position

See Ground 1, element [1.5].

[11.8] a contact arrangement supported by said housing and configured to permit power to be supplied to the motor only when the housing is operably attached to the actuator arrangement

See Ground 1, element [1.6].

[13] The surgical cutting and stapling instrument of claim 11 wherein said drive beam includes at least one camming pin configured to move said anvil to a closed position when said drive beam is axially driven from the starting position to the ending position

See Ground 1, claim [6].

[15] The surgical cutting and stapling instrument of claim 11 wherein the carrier is axially displaced from a portion of the housing that supports the motor

See Ground 1, claim [9].

[16] The surgical cutting and stapling instrument of claim 15 comprising a shaft extending between the motor and the drive beam.

See Ground 1, claim [10].

[17.1] A surgical cutting and stapling instrument comprising

See Ground 1, element [1.1].

[17.2] an end effector configured to cut and staple tissue

See Ground 1, element [1.1].

[17.3] a housing coupled to the end effector and including means for removably coupling the housing to an actuator arrangement

"Housing coupled to the end effector"

See Ground 1, element [11.3].

"Means for removably coupling the housing to an actuator arrangement"

See Ground 1, element [1.2]. The "protrusions 638" in Heinrich are the same as, or, at a minimum, equivalent to, the '601 patent's "engagement nubs 254." *Id.*; *compare* IS1001, 12:1-3 ("Nubs 254 form a bayonet type coupling with the distal end of the elongated body portion 14 of the surgical stapling apparatus . . . .") *with* IS1005, Claim 37 ("the DLU is connected to the robotic arm via a bayonet-type connection"). Because the structures are essentially identical, they are interchangeable. *Chiuminatta Concrete Concepts, Inc. v. Cardinal Indus.*, 145 F.3d 1303, 1309-10 (Fed. Cir. 1998); IS1003, ¶¶ 155-56.

The relevant differences (if any) between these structures are insubstantial and add nothing of significance. *Id.*; *Chiuminatta*, 145 F.3d at 1309. Indeed, both structures perform the identical function. IS1003, ¶¶ 155-56; *IMS Tech., Inc. v. Haas Automation, Inc.*, 206 F.3d 1422, 1430 (Fed. Cir. 2000). And they perform that function in the same way (*i.e.*, using a bayonet type connection) to achieve the same result (*i.e.*, locking and unlocking protrusions 638 and nubs 254 within a receiving slot).

[17.4] a motor supported by said housing and operably interfacing with a portion of the end effector for selective actuation thereof

See Ground 1, element [1.5].

[17.5] a contact arrangement supported by said housing and configured to permit power to be supplied to the motor only when the housing is operably attached to the actuator arrangement

See Ground 1, element [1.6].

[18] The surgical cutting and stapling instrument of claim 17 wherein the portion of the end effector includes a tissue cutting portion

See Ground 1, element [4.3].

[19] The surgical cutting and stapling instrument of claim 17 wherein the motor is located proximal to the end effector within the housing

See Ground 1, claim [9].

[20] The surgical cutting and stapling instrument of claim 17 further comprising a shaft extending between the motor and the end effector portion

See Ground 1, claim [10].

B. Ground 2: Claims 1-2, 4-6, 8-11, 13, and 15-20 are obvious over Heinrich in view of Milliman

As discussed above, Heinrich anticipates claims 1-2, 4-6, 8-11, 13, and 15-20. *See* Ground 1. If Heinrich is deemed not to disclose the Milliman subject matter incorporated by reference, it would have been obvious to combine Heinrich and Milliman to arrive at the same subject matter. IS1003, ¶ 99-101.

A POSITA implementing the embodiments of Heinrich wherein disposable loading unit 316 of surgical stapler 300 interfaces directly with robotic surgical

system 600 would have been motivated to combine Heinrich with Milliman for at least two reasons. *Id*. First, if Heinrich's incorporation of Milliman by reference is insufficient, then Heinrich does not disclose the internal structure of disposable loading unit 316 and a POSITA would have needed to find a reference describing it or something similar to implement Heinrich's invention. *Id*. Accordingly, that POSITA would naturally have turned to a reference such as Milliman, which teaches how to design and construct the loading unit's internal structure. *Id*.; IS1005, ¶¶ 92-99. Second, Heinrich conveniently and explicitly directs a POSITA to Milliman for its "detailed explanation of the operation of surgical stapler 300." IS1005, ¶ 99. It is difficult to imagine a stronger suggestion to combine the teachings of two references.

Furthermore, if Heinrich is deemed not to disclose a loading unit 618 "having a shaft 316, a cartridge assembly 318 and an anvil [320]" operatively connected to robot 616 as shown below in the <u>composite</u> image of Figures 3a and 9 from Heinrich, then such a device would have been obvious over Heinrich in view of Milliman. IS1003, ¶ 101; Ground 1, element [1.1].

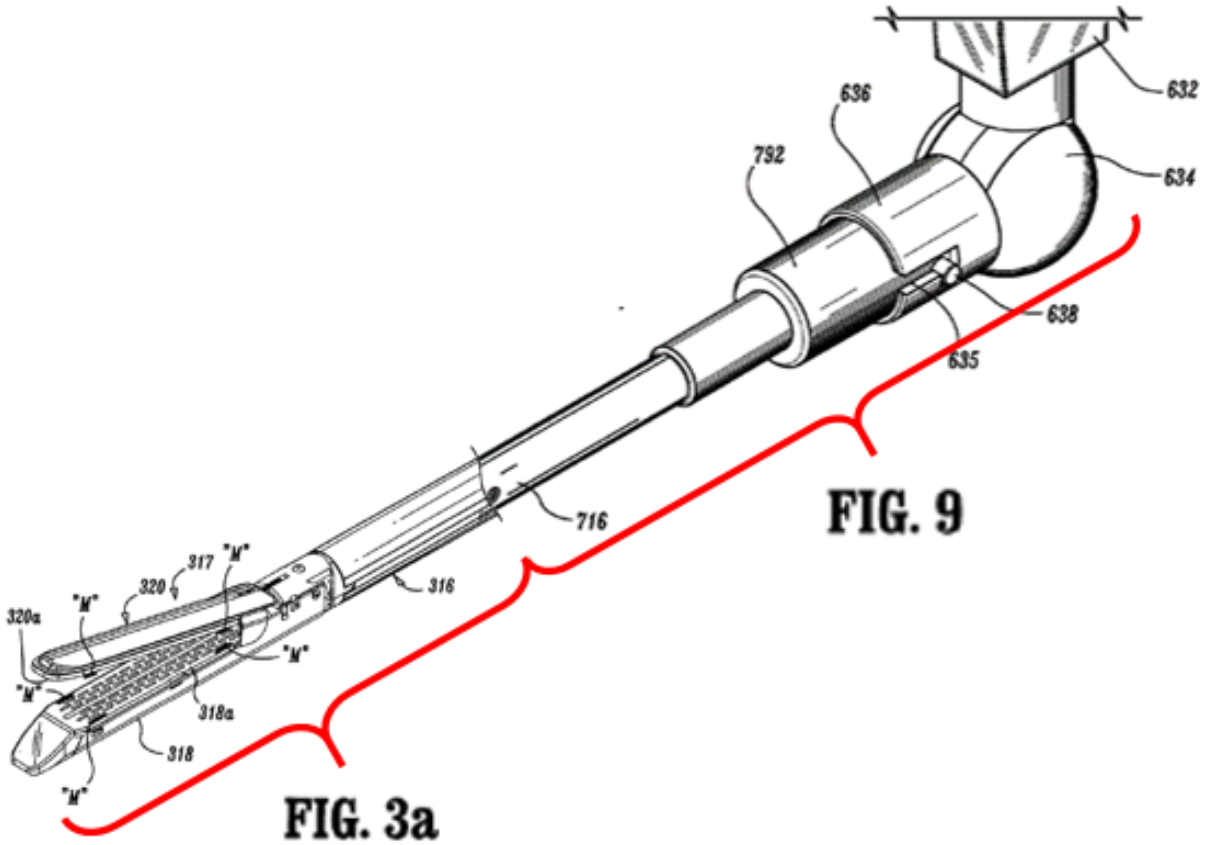

As noted above, Heinrich explicitly states that "the above described surgical instruments [(*e.g.*, the disposable loading unit of surgical stapler 300)] . . . can be employed with or interface directly with a robotic surgical system 600." IS1005, ¶ 130. Heinrich also explicitly states that the generic loading unit 618 shown in Fig. 7 above "include[s] . . . those having a shaft 316, a cartridge assembly 318 and an anvil [320] (*see, e.g.*, Fig. 3 . . .)" (*i.e.*, the disposable loading unit of surgical stapler 300). IS1005, ¶ 133; IS1003, ¶ 101. And, as shown below, Heinrich provides several examples of modifying hand-held stapling sub-systems, like surgical stapler 300, to be removably attachable to Heinrich's robotic system 600. *Compare* IS1005, Figs. 1, 5, 6 *with* IS1005, Figs. 9, 11, 10, respectively.

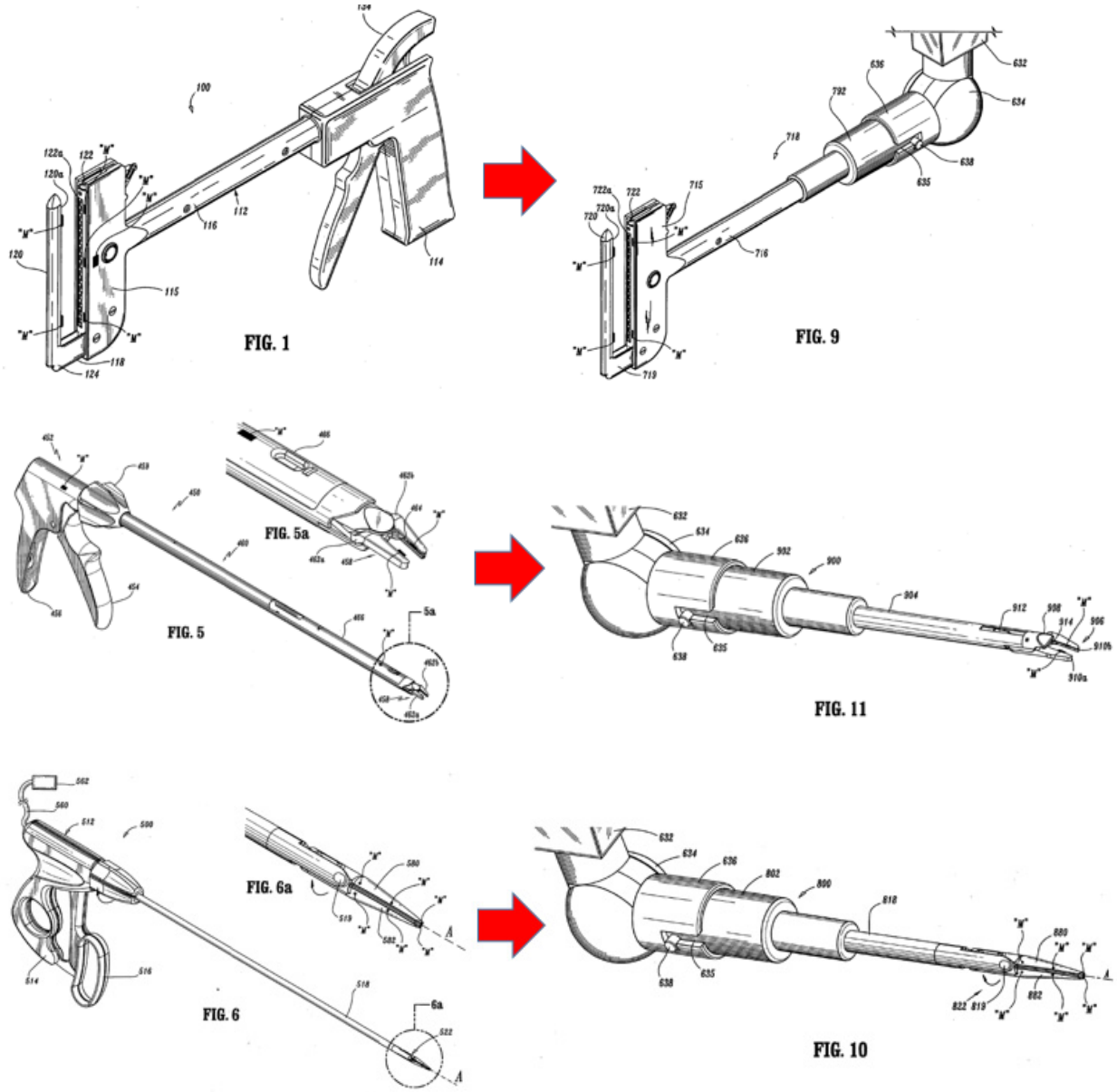

C. Ground 3: Claims 1-2, 4-11, and 13-20 are obvious over Heinrich in view of Alesi

As discussed above, Heinrich discloses all elements of claim 4 (from which claim 7 depends), claim 9 (from which claim 10 depends), claim 11 (from which claims 14 and 16 depend), and claim 17 (from which claim 20 depends). *See* Ground 1, claims [4], [9], [11], [17].

[7] The surgical cutting and stapling instrument of claim 4 further comprising a drive screw rotatably supported within the housing in operable engagement with the motor, the drive screw in threaded engagement with a portion of the drive beam

"Drive screw"

Heinrich discloses this limitation. IS1003, ¶ 164. Heinrich discloses a screw rod for firing staples. IS1005, ¶ 141 ("Alternatively, MEMS devices 'M' can measure an associated member, such as a displacement of a drive rod or a rotation of a screw rod to determine whether the staples have been fired or not."). A POSITA would have understood that Heinrich's screw rod is a drive screw. IS1003, ¶ 164.

"Rotatably supported within the housing in operable engagement with the motor [and] in threaded engagement with a portion of the drive beam"

A POSITA would have understood that Heinrich's screw rod is rotatably supported within the housing, in operable engagement within the motor, and in threaded engagement with a portion of the drive beam. IS1003, ¶¶ 165-71. Heinrich, however, does not explicitly disclose these relationships. Nonetheless, they would have been obvious in view of Alesi. *Id*.

Like Heinrich, Alesi discloses a surgical stapler that includes a drive screw 270. IS1010, Figs. 14-15.

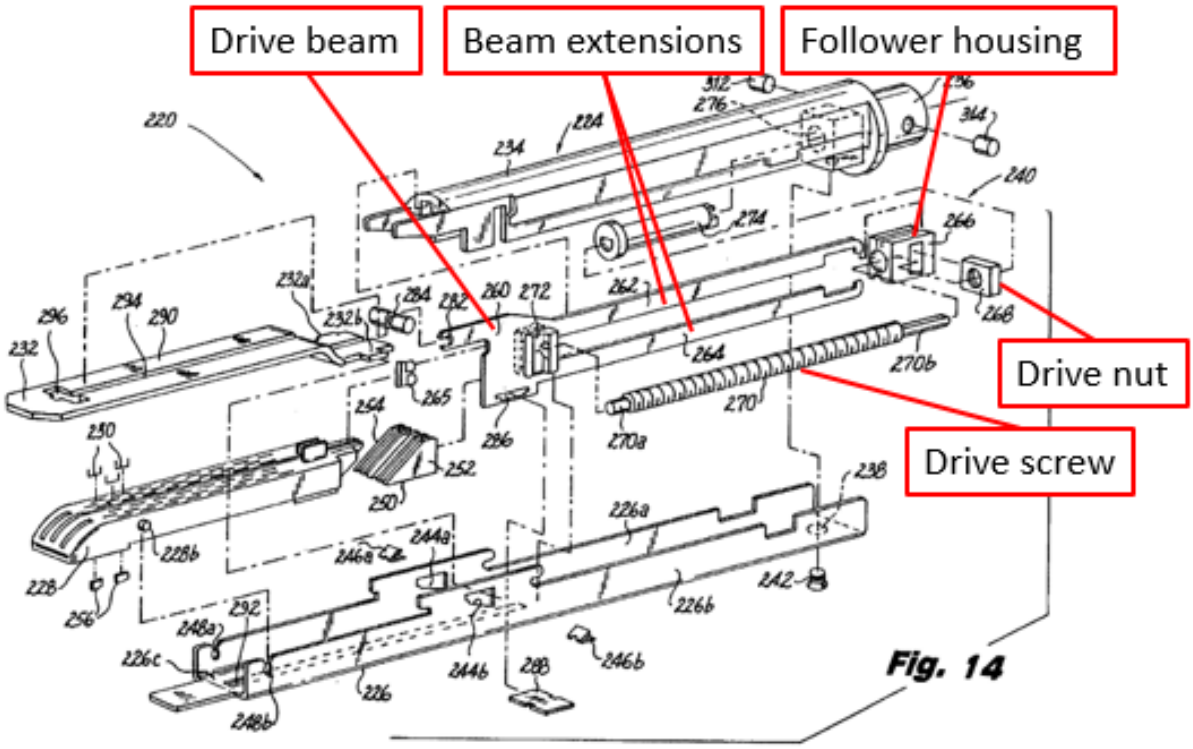

Fig. 14

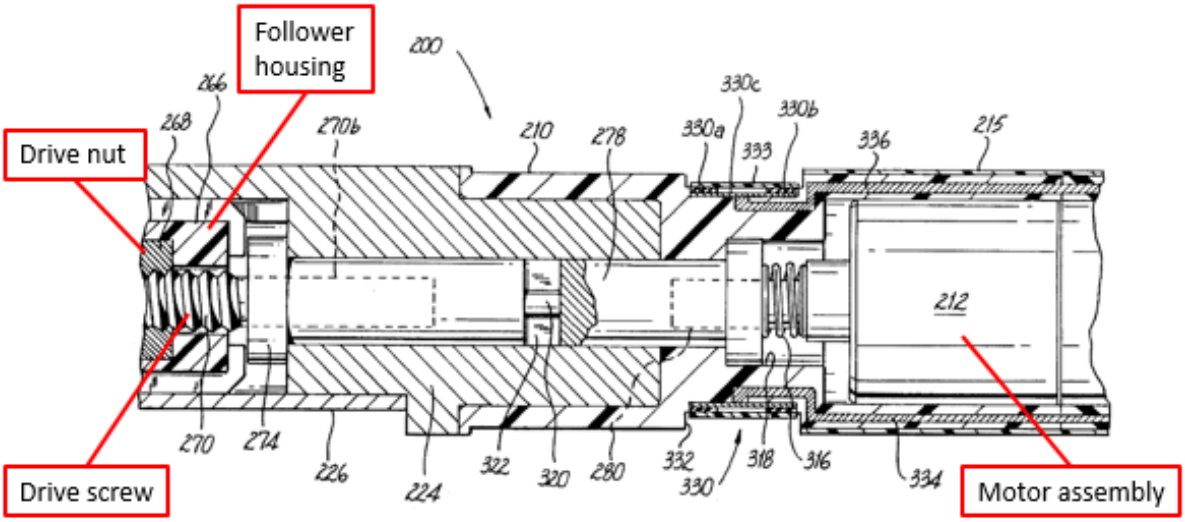

Fig. 15

As shown above, the drive screw rotates within the housing. *Id*. The drive screw is connected to and driven by (*i.e*., operably engaged with) the motor assembly 212. IS1010, 10:42-50 ("[D]rive screw 270 is configured to engage a screw

coupling 274 [which is] detachably connected at a proximal end to a shaft coupling 278 which is supported on the drive shaft 280 of motor assembly 212."); *see also* 6:38-41 ("Drive screw 84 is driven by a motor assembly 86 and is connected to the drive shaft 88 of motor assembly 86 . . . ."). And the drive screw is in threaded engagement with the drive nut 268 at the proximal end of actuation beam 260 (*i.e.*, drive beam). IS1010, Fig. 14, 10:25-32 (Actuation beam 260 "has a pair of parallel elongate beam extensions 262 and 264 the proximal ends of which are mounted to a follower housing 266. Follower housing 266 supports a drive nut 268 which is threadably associated with axial drive screw 270 in such a manner so that axial rotation of drive screw 270 causes the longitudinal translation thereof.").

A POSITA would have been motivated to implement Heinrich's drive screw to be rotatably supported within the housing, in operable engagement with the motor, and in threaded engagement with a portion of the drive beam as taught by Alesi for several reasons. IS1003, ¶¶ 168-71. First, Alesi provides a reason to use its drive screw implementation. *Id*. For example, Alesi indicates that its design is "compact, lightweight and easy to manufacture." IS1010, 2:18-19. Thus, a POSITA would have been motivated to use Alesi's drive screw implementation to achieve these goals. IS1003, ¶ 168.

Second, a POSITA would have recognized that Heinrich contemplates use of its robotic system 600 with "stapling or fastener applying instrument[]" and Alesi

provides details on a motor powered "surgical stapling device." IS1005, ¶ 135; IS1010, 8:41-56; IS1003, ¶ 169. A POSITA would have therefore turned to Alesi for details on how to implement Heinrich's motor powered surgical stapler to increase the number of uses for Heinrich's system. IS1003, ¶ 169.

Third, when, as here, "there are a finite number of identified, predictable solutions, a person of ordinary skill has good reason to pursue the known options within his or her technical grasp." *KSR Int'l Co. v. Teleflex Inc*., 550 U.S. 398, 421 (2007). In this case, Alesi uses a drive screw implementation that is very similar to the drive screw implementation disclosed in the '601 patent. IS1010, Figs. 14-15, 4:3-5; IS1003, ¶ 170. And POSITA would have recognized that Alesi's drive screw implementation is an effective and efficient implementation of Heinrich's drive screw. IS1003, ¶ 170. Thus, if Heinrich's description of using a "screw rod" (*i.e*., drive screw) to fire a surgical stapler is deemed to not adequately describe the claimed relationship between Heinrich's drive screw, housing, motor, and drive beam, then a POSITA would have been motivated to combine Heinrich with Alesi to implement Heinrich's screw rod as claimed in the '601 patent. *Id*.

Finally, implementing Heinrich's screw rod as suggested by Alesi is merely the application of a known technique (*e.g*., rotatably supporting a drive screw in operable engagement with a motor and in threaded engagement with a portion of a drive beam as suggested by Alesi) to a known system (*e.g*., Heinrich's surgical

stapler having a drive screw). IS1003, ¶ 171. Heinrich and Alesi are in the same field of endeavor (*i.e.*, motor powered surgical staplers). *Id*. And the combination of Heinrich with Alesi achieves entirely predictable results without altering or hindering the functions performed by Heinrich's device (*i.e.*, in combination, each element merely performs the same function as it does separately). *Id*.; *KSR*, 550 U.S. at 417 ("[W]hen a patent simply arranges old elements with each performing the same function it had been known to perform and yields no more than one would expect from such an arrangement, the combination is obvious.") (internal quotation marks omitted). Accordingly, a POSITA could have easily implemented Heinrich's drive screw implementation as taught by Alesi. IS1003, ¶ 171.

[10] The surgical cutting and stapling instrument of claim 9 comprising a shaft extending between the motor and the axial drive assembly

As explained above (Ground 1: claim 10, *supra*), a POSITA would have understood that Milliman's control rod 52, which Heinrich incorporates by reference, or Heinrich's screw rod extends between axial drive assembly 212 and the motor (*i.e.*, electro-mechanical assembly 619) when disposable loading unit 316 interfaces directly with robotic surgical system 600. Indeed, it is difficult to imagine how to actuate disposable loading unit 316 without control rod 52 or an equivalent screw rod extending between electro-mechanical assembly 619 and axial drive assembly 212. IS1003, ¶¶ 172-74.

Like Heinrich, Alesi discloses a surgical stapler that includes a drive screw (*i.e.*, a shaft). IS1003, ¶ 173; IS1010, Figs. 14-15.

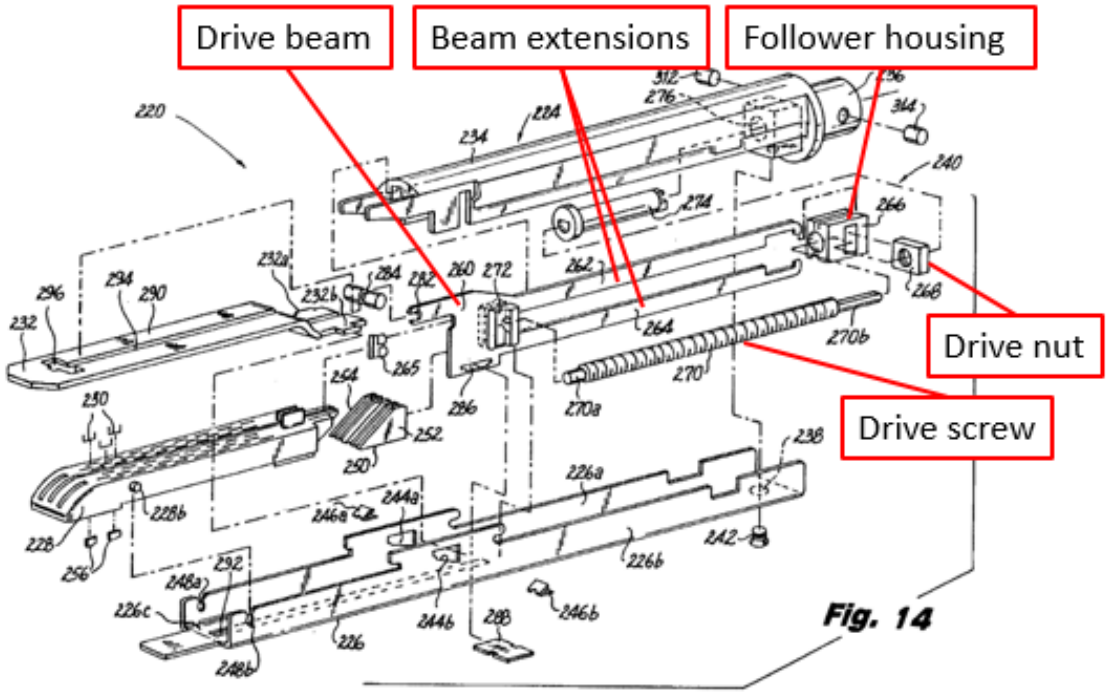

Fig. 14

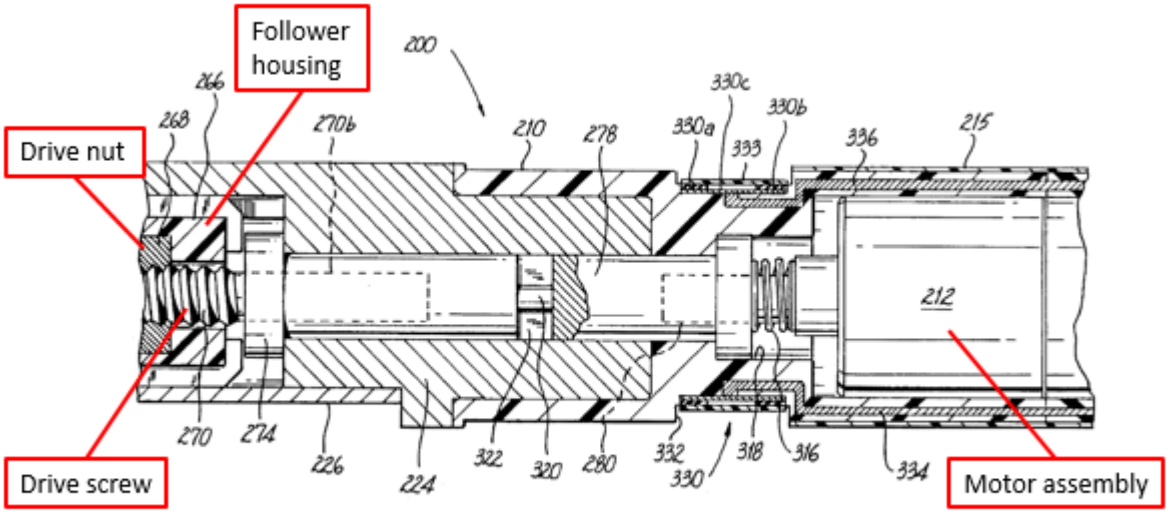

Fig. 15

As shown above in Figures 14 and 15 of Alesi, the drive screw extends between the motor 212 and the combination of drive beam 260 and drive nut 268 (*i.e.*, the

axial drive assembly). IS1010, 10:42-50 ("[D]rive screw 270 is configured to engage a screw coupling 274 [which is] detachably connected at a proximal end to a shaft coupling 278 which is supported on the drive shaft 280 of motor assembly 212."); *see also* 6:38-41 ("Drive screw 84 is driven by a motor assembly 86 and is connected to the drive shaft 88 of motor assembly 86 . . . .").

Thus, if Heinrich is deemed not to disclose a shaft that extends between the motor and the axial drive assembly, then it would have been obvious in view of Alesi. Specifically, it would have been obvious to implement Heinrich's control rod or screw rod such that it extends between the motor (*i.e.*, electro-mechanical assembly 619) and axial drive assembly 212 for the reasons explained above. IS1003, ¶ 174; Section VIII (Ground 3, Claim [7]), *supra*.

[14] The surgical cutting and stapling instrument of claim 11 further comprising a drive screw rotatably supported within the housing in operable engagement with the motor, the drive screw in threaded engagement with a portion of the drive beam.

See Ground 3, claim [7].

[16] The surgical cutting and stapling instrument of claim 15 comprising a shaft extending between the motor and the drive beam.

See Ground 3, claim [10].

[20] The surgical cutting and stapling instrument of claim 17 further comprising a shaft extending between the motor and the end effector portion.

See Ground 3, claim [10].

[1]-[2], [4]-[6], [8]-[11], [13], and [15]-[20]

If Heinrich is deemed not to disclose the motor (*i.e.*, electro-mechanical assembly 619) operably interfacing with the axial drive assembly 212 (*see* Ground 1, element [1.5]) then such a configuration would have been obvious in view of Alesi. *See* Ground 3, claims [7] and [10]; IS1003, ¶ 178.

D. Ground 4: Claims 1-2, 4-11, and 13-20 are obvious over Heinrich in view of Alesi and further in view of Milliman

As discussed above, claims 1-2, 4-11, and 13-20 are obvious over Heinrich in view of Alesi. *See* Ground 2. If Heinrich is deemed not to disclose the Milliman subject matter incorporated by reference, it would have been obvious to combine Heinrich and Milliman to arrive at the same subject matter for the reasons explained above. *See* Ground 2.

E. Ground 5: Claims 3 and 12 are obvious over Heinrich in view of Tonet

As discussed above, Heinrich anticipates claim 1 (from which claim 3 depends) and claim 11 (from which claim 12 depends).

[3] The surgical cutting and stapling instrument of claim 1 wherein the actuator arrangement comprises a portion of a handheld surgical instrument

Although Heinrich's actuator arrangement (*i.e.*, actuation assembly 612 and robot 616) does not comprise a portion of a handheld surgical instrument, such a configuration would have been obvious in view of Tonet. IS1003, ¶¶ 181-84. Tonet, for example, discloses replacing a robotic arm, like Heinrich's, with a hand-

held robot. *Id.*; IS1014, 1-2, Fig. 1.

Fig. 1. Concept drawing of the lightweight hand-held laparoscopic robot (left) and the first prototype (right), using the EndoWrist of the da Vinci Surgical System as end-effector

When, as here, "there are a finite number of identified, predictable solutions, a person of ordinary skill has good reason to pursue the known options within his or her technical grasp." *KSR*, 550 U.S. at 421. As explained above, Heinrich describes one predictable solution for positioning a surgical instrument—*i.e.*, using a robotic arm. *See* Ground 1. And Tonet describes another predictable solution—*i.e.,* using a hand-held robot. IS1014, 1-2, Fig. 1.

A POSITA would have been motivated to modify Heinrich's system as taught by Tonet for several reasons. IS1003, ¶¶ 183-84. For example, Tonet teaches that "[t]eleoperated robots for minimally invasive surgery [(like Heinrich's robot)] make surgeons loose [sic] direct contact with the patient," which can "severely hamper surgeons' perception and motor skills." IS1014, 1. Tonet also

teaches that [t]eleoperated systems, like the da Vinci Surgical System by Intuitive Surgical Inc." and Heinrich's system have some advantages, but can require "longer setup times" and "clutter[] the already crowded operating table." *Id*. And Tonet further teaches that "[e]xperienced surgeons tend to agree that in many procedures the benefits provided by teleoperated systems are not really needed during the whole surgical procedure, and they tend to prefer the traditional hands-on approach for routine tasks." IS1014, 1-2.

Moreover, such a modification of Heinrich's surgical system would have been well within a POSITA's abilities for several reasons. IS1003, ¶ 184. Indeed, it would have been merely the application of a known technique (*e.g*., using a hand-held robot) to manipulate a known system (*e.g*., Heinrich's disposable loading unit 618) in the same field of endeavor (*i.e*., robotic surgical systems). *Id*.; *KSR*, 550 U.S. at 417. And, in combination, each element (*i.e*., Heinrich's disposable loading unit 618 and actuation assembly 612 and Tonet's handle) merely performs the same predictable function as it does separately without significantly altering or hindering the functions performed by Heinrich's disposable loading unit 618. IS1003, ¶ 184.

[12] The surgical cutting and stapling instrument of claim 11 wherein the actuator arrangement comprises a portion of a handheld surgical instrument

See Ground 5, claim [3].

F. Ground 6: Claims 3 and 12 are obvious over Heinrich in view of Tonet and further in view of Milliman

As discussed above, claims 3 and 12 are obvious over Heinrich in view of Tonet. *See* Ground 4. If Heinrich is deemed not to disclose the Milliman subject matter incorporated by reference, it would have been obvious to combine Heinrich and Milliman to arrive at the same subject matter for the reasons explained above. *See* Ground 2.

X. CONCLUSION

Claims 1-20 of the ’601 patent are invalid pursuant to Grounds 1-6 set forth above. Accordingly, Petitioner requests *Inter Partes* Review of these challenged claims.

Respectfully submitted,

Dated: May 22, 2018

/John C. Phillips/
John C. Phillips, Reg. No. 35,322
Fish & Richardson P.C.
Attorney for Petitioner

(Trial No. IPR2018-00933)

CERTIFICATION UNDER 37 C.F.R. § 42.24(d)

Under the provisions of 37 C.F.R. § 42.24(d), the undersigned hereby certifies that the word count for the foregoing Petition for *Inter Partes* Review totals 11,542, which is less than the 14,000 allowed under 37 C.F.R. § 42.24(a)(i).

Respectfully submitted,

Dated: May 22, 2018

/John C. Phillips/
John C. Phillips, Reg. No. 35,322
Fish & Richardson P.C.
Attorney for Petitioner

CERTIFICATE OF SERVICE

Pursuant to 37 C.F.R. §§ 42.6(e)(4)(i) *et seq.* and 42.105(b), the undersigned certifies that on May 22, 2018, a complete and entire copy of this Petition for *Inter Partes* Review and all supporting exhibits were provided by Federal Express, cost prepaid, to the Patent Owner by serving the correspondence address of record as follows:

JOSEPH F. SHIRTZ
JOHNSON & JOHNSON
ONE JOHNSON & JOHNSON PLAZA
NEW BRUNSWICK NJ 08933-7003

/Edward G. Faeth/

Edward G. Faeth
Fish & Richardson P.C.
60 South Sixth Street, Suite 3200
Minneapolis, MN 55402
(202) 626-6420