UNITED STATES PATENT AND TRADEMARK OFFICE

BEFORE THE PATENT TRIAL AND APPEAL BOARD

C. R. BARD, INC.
Petitioner,

v.

MEDLINE INDUSTRIES, INC.
Patent Owner.

Patent No. 9,745,088

Inter Partes Review No. IPR2019-00036

PETITION FOR *INTER PARTES* REVIEW

UNDER 35 U.S.C. §§ 311-319 AND 37 C.F.R. § 42.100 *et seq.*

TABLE OF CONTENTS

Page

TABLE OF CONTENTS
(continued)

Page

TABLE OF CONTENTS
(continued)

Page

Exhibit List for *Inter Partes* Review of U.S. Patent No. 9,745,088

Exhibit Description	Exhibit #
U.S. Patent No. 9,745,088 to Tomes et al.	1001
Declaration of Michael Plishka	1002
Declaration of Edward J. Yun, M.D.	1003
Prosecution History of U.S. Patent No. 9,745,088	1004
U.S. Patent No. 7,278,987 to Solazzo	1005
U.S. Patent No. 3,329,261 to Serany, Jr. et al.	1006
U.S. Patent No. 6,840,379 to Franks-Farah et al.	1007
U.S. Patent No. 3,166,189 to Disston	1008
U.S. Patent No. 5,931,303 to Salvadori	1009
Madeo M. and Roodhouse, A.J., Reducing the risks associated with urinary catheters, *Nursing Standard*, Vol. 23, No. 29, 47-55 (2009)	1010
Japanese Patent No. 2007-229520 to Imai et al.	1011
English Translation of Japanese Patent No. 2007-229520 to Imai et al.	1012
U.S. Patent No. 4,160,505 to Rauschenberger	1013
U.S. Patent No. 4,226,328 to Beddow	1014
Male Catheter Insertion Video, Uploaded to YouTube on February 7, 2008, Parts 1 and 2	1015A-B
Norman, Donald A., *The Design of Everyday Things*, 2002 ed. (Excerpt)	1016
Diagram of Medline Patent Portfolio	1017

Exhibit Description	Exhibit #
U.S. Published Application No. 2006/0009742 to Solazzo	1018
Notice of Allowability for U.S. Application No. 13/153,265	1019
U.S. Published Application No. 2008/0249476 to Bierman et al.	1020
U.S. Patent No. 4,523,679 to Paikoff et al.	1021
E-mail from Medline's Counsel to Bard Concerning Proposed Claim Constructions Under Local Patent Rules (Case No. 17-7216)	1022
Medline's Responsive Claim Construction Brief (Case No. 16-3529)	1023
E-mail from Bard to Medline's Counsel Concerning Proposed Claim Constructions Under Local Patent Rules (Case No. 17-7216)	1024
Evidence of Public Availability of Nursing Standard Article	1025

Petitioner C. R. Bard, Inc. ("Petitioner" or "Bard") respectfully petitions for *inter partes* review of claims 45-58, 60-74, 76-90 and 92 of U.S. Patent No. 9,745,088 ("the '088 patent" (Ex. 1001)) in accordance with 35 U.S.C. §§ 311-319 and 37 C.F.R. § 42.100 *et seq*.

I. INTRODUCTION

The '088 patent is directed to a tray for storing medical devices such as a catheter and related medical devices. (Ex. 1001, 1:34-38.) The tray comprises multiple compartments and holds multiple syringes. (*See*, *e.g.*, Ex. 1001, Fig. 7.) All the challenged claims recite that a tray compartment comprises a Foley catheter, a coiled tubing and a fluid bag. In his Notice of Allowability, the Examiner explained that the closest art (Paikoff) did not have these three elements.

The Examiner, however, missed Solazzo (Ex. 1005). Figure 1 (annotated) of Solazzo shows a tray with multiple compartments, such as compartments 3 and 27.

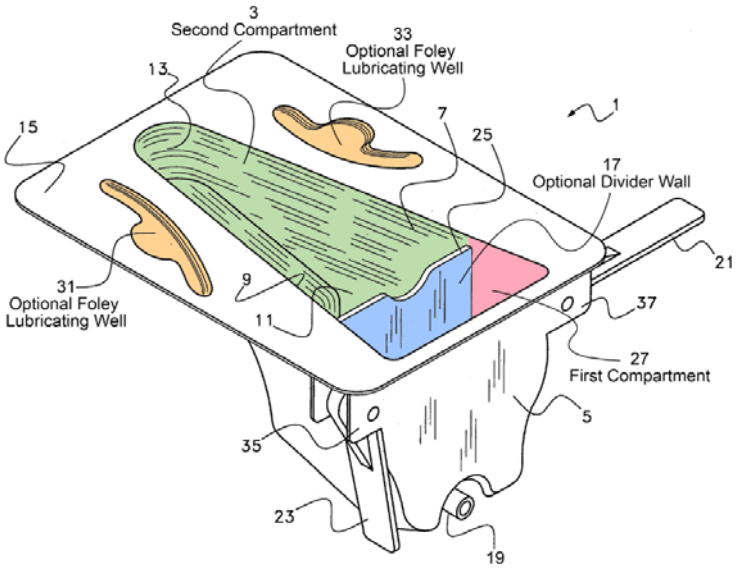

Fig. 1

Solazzo further discloses that the tray can hold multiple syringes. (Ex. 1005, 3:20-24.) Figure 8 (annotated) illustrates an example of the tray with a Foley catheter 120 in a compartment 3. (*See also* Ex. 1005, 3:17.)

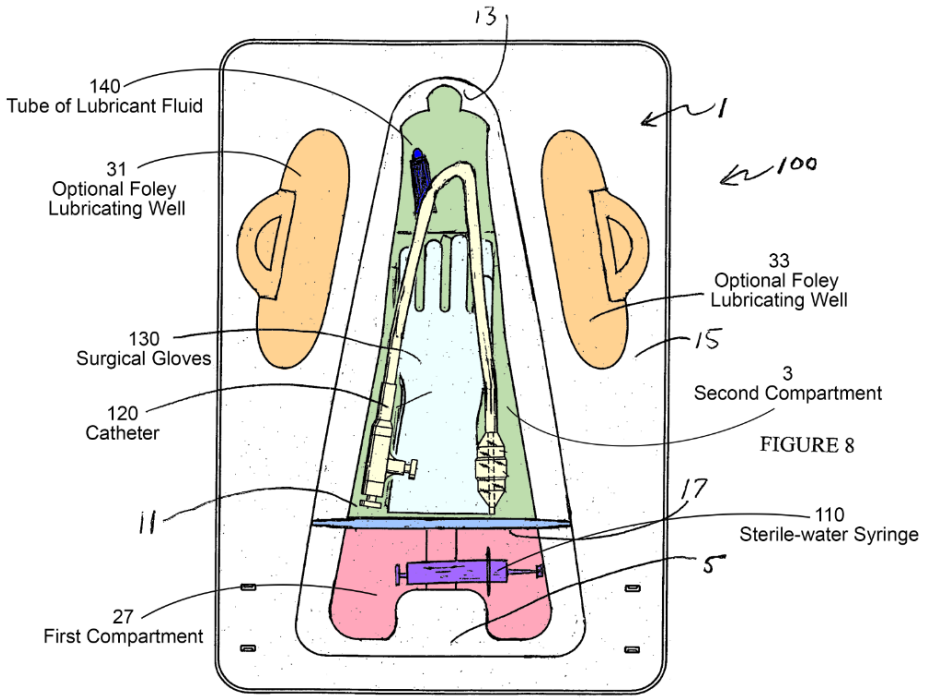

Solazzo does not explicitly disclose coiled tubing and a fluid bag with its Foley catheter. But catheters with these elements have been known for over 50 years. Disston (Ex. 1008), which issued in 1963 to Bard, is a good example a closed-system Foley catheter:

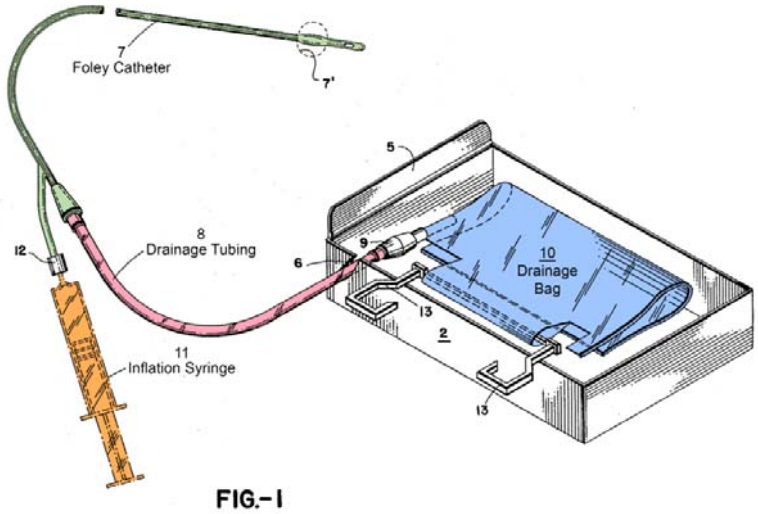

As discussed in the accompanying Declarations of Michael Plishka (Ex. 1002) and Dr. Edward Yun (Ex. 1003), there are many reasons to utilize a closed-system Foley catheter in Solazzo, including convenience ("ready to use") and reduction of the risk of infection.

The Examiner missed Solazzo, because it was buried in an IDS with about 375 references. By the end of the original examination, the Examiner had not applied or even discussed Solazzo.

Aside from the above features, the challenged claims of the '088 patent recite a number of well-known components associated with a catheterization tray. For example, independent claims 45, 61 and 77 recite that the tray is enclosed in a wrap and outer packaging. These components have also been known for over 50 years. (*See*, *e.g.*, Ex. 1006.) Dependent claims recite such well-known tray

components as a specimen jar, swabsticks and drapes. Indeed, as discussed below, every element in the challenged claims was known.

Accordingly, Bard respectfully submits that the challenged claims are unpatentable for this reasons set forth in this Petition.

II. THE STATE OF THE ART

By 2009 (the earliest purported priority date of the ’088 patent), the packaging of medical devices, in particular the packaging of Foley catheters and related medical devices, was extremely well-developed. Bard first presents a summary of the state of the art as of 2009 with respect to tray structure, tray components and functional aspects of the tray. This presentation is done before addressing the ’088 patent so as to place its purported inventions in context. Moreover, the state of the art is relevant to the obviousness combinations in the Petition. *See Randall Mfg. v. Rea*, 733 F.3d 1355, 1362 (Fed. Cir. 2013).

A. Tray Structure

The practice of packaging a Foley catheter with related medical devices inside a tray dates back nearly 50 years before the earliest purported priority date of the ’088 patent. (Ex. 1002, ¶ 43.) For example, U.S. Patent No. 3,166,189 to Disston (Ex. 1008) was filed on March 26, 1963 by Bard and is directed to a sealed catheterization package. The package includes an all-in-one single level tray that holds a Foley catheter pre-connected to a drainage bag (*see* annotated Figure 1

below) and its related components, such as an underpad, sterile gloves, lubricant, and a water-filled syringe for inflating the balloon of the Foley catheter. (Ex. 1008, 2:15-26; Figs. 1-2; Ex. 1002, ¶¶ 44-49.)

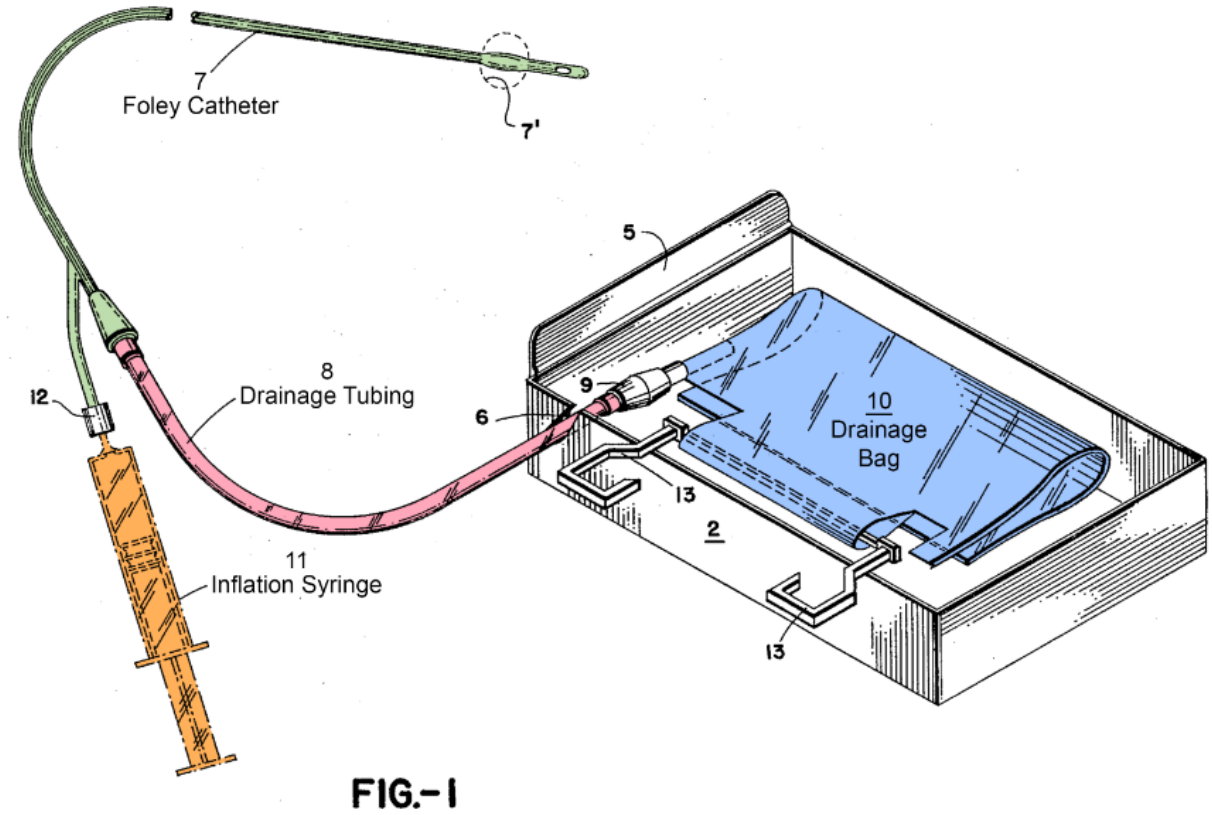

U.S. Patent No. 3,329,261 to Serany (Ex. 1006), filed on September 3, 1965 also by Bard, discloses a catheterization package including a Foley catheter preconnected to a drainage bottle via tubing, a bottom tray, and a top tray having multiple compartments contoured to fit components stored therein as shown in annotated Figs. 6 and 7 below. (Ex. 1006, 2:39-40, 3:23-26.) For example, contoured depression 44 holds a syringe and includes an upper portion 44c that is wider than the diameter of the syringe plunger handle 45a to facilitate easy

grasping, and indentations 44d to accommodate a flange or finger grip 45c of the syringe. (Ex. 1006, 3:6-22; Fig. 7; Ex. 1002, ¶¶ 50-53.)

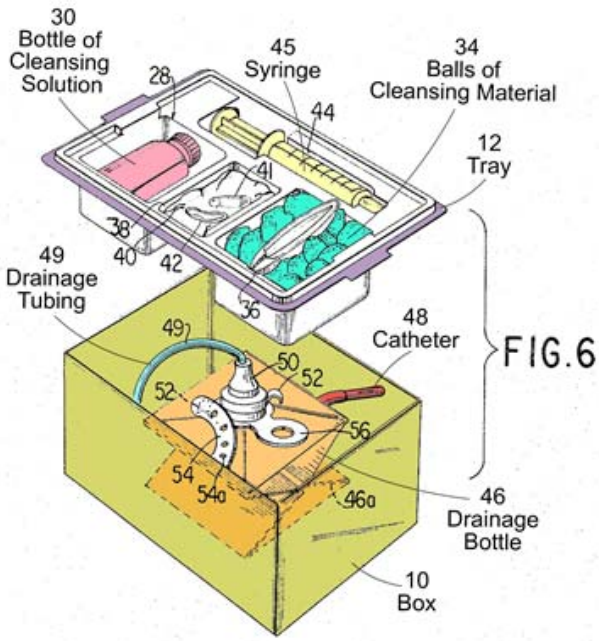

FIG.6

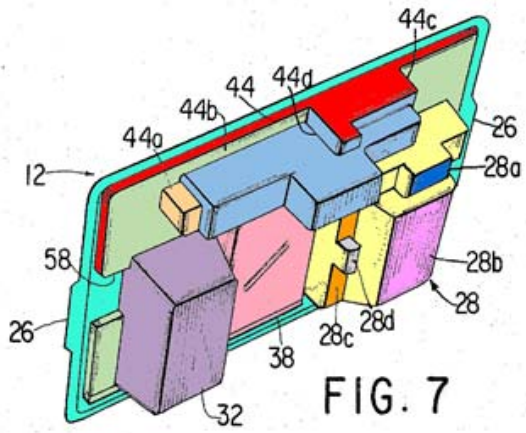

FIG. 7

Typically, a medical device tray is wrapped in a bag or outer wrap to allow shipment while holding components inside the tray. (Ex. 1002, ¶ 54.) An inner wrap, often known as a "CSR wrap," is often provided around the tray to maintain sterility of components within the tray. (Ex. 1002, ¶ 54.) Because Foley catheters must be sterile in order to be inserted into a patient's body, it was common practice to wrap a Foley catheter tray in a CSR wrap and enclose the wrapped tray with an outer packaging. (Ex. 1002, ¶ 55.)

For example, as shown in the annotated figures below, Serany discloses a tray enclosed in a wrap 14 and further encased in an outer envelope 16. (Ex. 1006, 1:60-66; Figs. 1-3; Ex. 1002, ¶¶ 56-58.) Serany's tray is "sterilized before or after enclosure in the envelope," whereby the "envelope 16 seals the contents to maintain the sterility of the contents." (Ex. 1006, 1:63-66.)

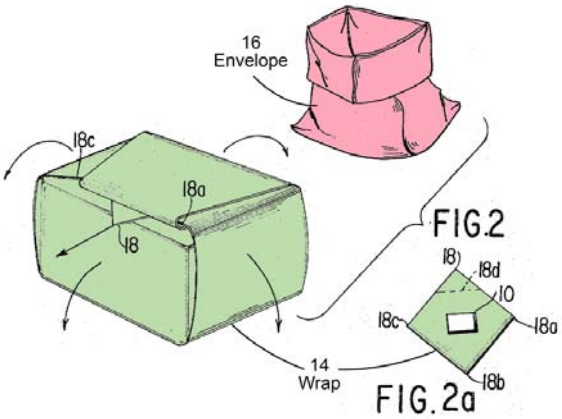

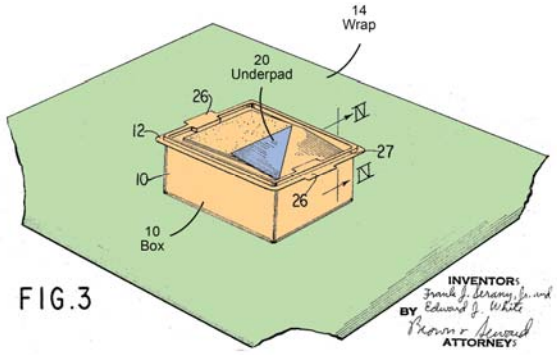

B. Components Of The Tray

By 2009, it was well known to include all of the components typically used when performing a Foley catheterization procedure inside a Foley catheter tray. (Ex. 1002, ¶ 59.)

Closed system Foley catheter. "Reducing the risks associated with urinary catheters," published in *Nursing Standard* Vol. 23 No. 29 on March 25, 2009 (referred to as "Nursing Standard article"; Exs. 1010, 1025) describes an all-in-one Foley tray including a "pre-connected catheter and drainage bag," which creates a "closed system." (Ex. 1010, 52; Ex. 1002, ¶¶ 59-61.) Using a "closed system" catheter reduces the risk of developing catheter-associated urinary tract infections ("CAUTIs") to between 8%-15%, as opposed to a 97% risk of infection with open systems. (Ex. 1010, 51.) Disston and Serany disclose closed-system Foley catheters. (Ex. 1002, ¶¶ 62-65.)

Inflation Syringe. A syringe containing sterile water is used to inflate a balloon on a Foley catheter to hold the indwelling catheter in place within the patient's bladder. For example, Disston discloses "inflation of the balloon 7 by injection of sterile water from the syringe 11." (Ex. 1008, 2:50-51; *see also* Ex. 1006, 3:50-51; Ex. 1005, 3:20-21; Ex. 1010, 52; Ex. 1002, ¶ 66.)

Lubricant/Lubrication Syringe. A Foley catheter needs to be lubricated before insertion into a patient. For example, Disston describes that it has been "long and customary" to take certain steps in catheterization, including "removing a sterile catheter from its envelope, applying lubricant to it, inserting it in the patient, inflating its balloon (if it is a Foley type retention catheter)." (Ex. 1008,

1:13-18.) Foley catheterization packages thus include lubricant. (Ex. 1008, 1:32; Ex. 1006, 3:3-4; Ex. 1005, 3:18; Ex. 1010, 52; Ex. 1002, ¶¶ 67-68.)

Drapes/Pads. To create a sterile working area, drapes and pads are used, such as an underbuttocks drape/pad placed under the patient and a fenestrated drape placed over the patient with an opening positioned at the insertion point of the catheter. (Ex. 1006, 2:22-31; Ex. 1010, 52; Ex. 1002, ¶¶ 69-70.)

Instructions. It was standard practice at the time of the invention to include instructions on how to perform a Foley catheterization procedure. For example, U.S. Patent No. 6,840,379 to Franks-Farah (Ex. 1007), filed on September 11, 2003, teaches a urinary catheter kit with "detailed step-by-step" instructions as shown in Fig. 2A below. (Ex. 1007, 2:33-37; Figs. 2B; Ex. 1002, ¶¶ 71-75.)

FIG. 2A

34

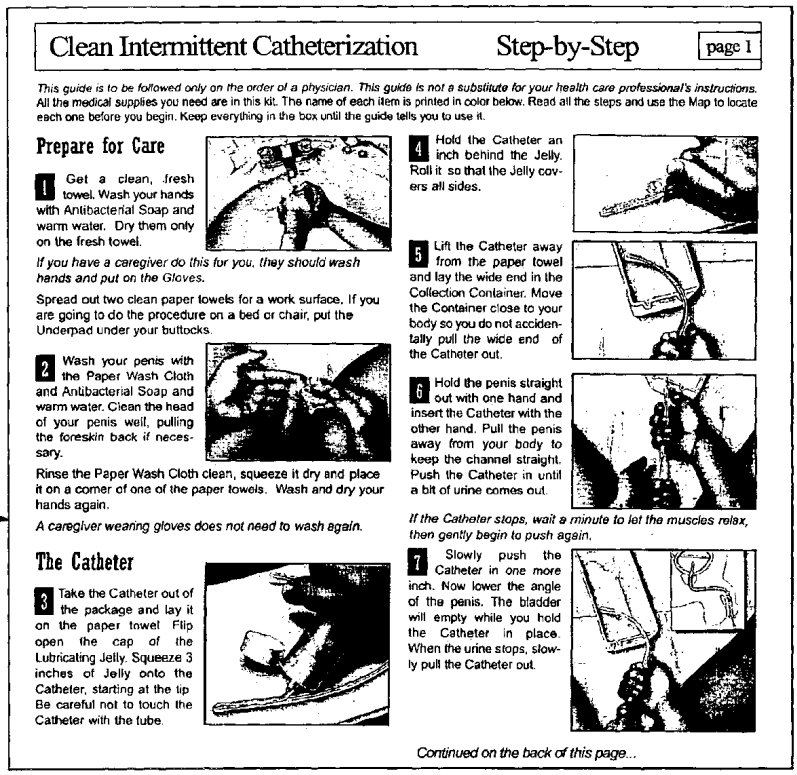

Clean Intermittent Catheterization Step-by-Step page 1

This guide is to be followed only on the order of a physician. This guide is not a substitute for your health care professional's instructions. All the medical supplies you need are in this kit. The name of each item is printed in color below. Read all the steps and use the Map to locate each one before you begin. Keep everything in the box until the guide tells you to use it.

Prepare for Care

1 Get a clean, fresh towel. Wash your hands with Antibacterial Soap and warm water. Dry them only on the fresh towel.

If you have a caregiver do this for you, they should wash hands and put on the Gloves.

Spread out two clean paper towels for a work surface. If you are going to do the procedure on a bed or chair, put the Underpad under your buttocks.

2 Wash your penis with the Paper Wash Cloth and Antibacterial Soap and warm water. Clean the head of your penis well, pulling the foreskin back if necessary.

Rinse the Paper Wash Cloth clean, squeeze it dry and place it on a corner of one of the paper towels. Wash and dry your hands again.

A caregiver wearing gloves does not need to wash again.

The Catheter

3 Take the Catheter out of the package and lay it on the paper towel. Flip open the cap of the Lubricating Jelly. Squeeze 3 inches of Jelly onto the Catheter, starting at the tip. Be careful not to touch the Catheter with the tube.

4 Hold the Catheter an inch behind the Jelly. Roll it so that the Jelly covers all sides.

5 Lift the Catheter away from the paper towel and lay the wide end in the Collection Container. Move the Container close to your body so you do not accidentally pull the wide end of the Catheter out.

6 Hold the penis straight out with one hand and insert the Catheter with the other hand. Pull the penis away from your body to keep the channel straight. Push the Catheter in until a bit of urine comes out.

If the Catheter stops, wait a minute to let the muscles relax, then gently begin to push again.

7 Slowly push the Catheter in one more inch. Now lower the angle of the penis. The bladder will empty while you hold the Catheter in place. When the urine stops, slowly pull the Catheter out.

Continued on the back of this page...

Miscellaneous. The provision of further components for catheterization within a Foley catheter tray was commonplace by the time of the invention. For example, Foley catheter trays include hand sanitizers, gloves, a specimen container, swab sticks and a Foley catheter securement device. (Ex. 1002, ¶¶ 74-91.)

C. Functional Aspects Of The Tray

Lubrication compartment. Compartments for lubricating catheters were well-known features of prior art trays. (Ex. 1002, ¶¶ 92-100.) For example, a prior art YouTube video, uploaded on February 7, 2008, entitled "Nursing Lab: Take Two – *Male Catheter Insertion*" ("*Male Catheter Insertion*"; Exs. 1015A-B),

shows a Foley catheterization procedure performed using an all-in-one Foley catheter tray, whereby a lubricant-filled syringe is removed from the tray and lubricant is dispensed into a compartment of the tray as a healthcare provider states, "I'm going to squirt my lube into this little container where the syringe was." (Ex. 1015A, 2:43-2:50.) Subsequently, a catheter is lubricated in the compartment. (Ex. 1015B, 0:55-1:00.)

Arranging items consistent with order of use. Ordering components within a tray according to their use during a catheterization procedure was well-known in the art. For example, Disston's catheterization components are "arranged in such order as to be most conveniently available when the container is opened…." (Ex. 1008, 2:15-19.) In Serany's tray, "[e]verything is available in the proper order of use…" and "in logical step-by-step order." (Ex. 1006, 1:23-25; 1:31-35; *see also* Ex. 1002, ¶¶ 101-106.)

Arranging Items to Prompt Certain User Behavior (i.e., Affordances). Prompting certain user behaviors through the design of things was well-known as "affordances," a term popularized by author Donald A. Norman in his book "*The Design of Everyday Things*," first published in 1988, which describes "affordances" as providing "clues as to the operation of things."

> Affordances provide strong clues as to the operation of things. Plates are for pushing. Knobs are for turning. Slots are for inserting things.

> Balls are for throwing or bouncing. When affordances are taken advantage of, the user knows what to do just by looking: no picture, label, or instruction is required.

(Ex. 1016, 9.)

Disston's tray presents items "arranged in such order as to be most conveniently available when the container is opened" and staggered so "that it can be opened without any part of either hand of the user coming in contact with the contents." (Ex. 1008, 2:15-23, 2:63-72; *see also* Ex. 1002, ¶¶ 107-114.)

D. Catheterization and Irrigation Procedures

A urethral (or urinary) catheter is placed to drain urine from the bladder. (Ex. 1003, ¶ 11.) An intermittent catheter is a one-time use catheter. (Ex. 1003, ¶ 11.) A Foley catheter is an indwelling catheter that is designed to remain in the patient for longer periods of time, and includes an inflatable balloon for this purpose. (Ex. 1003, ¶ 11.)

A Foley catheter procedure (as of 2009) using a Foley catheter kit involved a well-known series of steps. A practitioner (such as a nurse or urologist) opens the outside packaging and unfolds the CSR wrap to create a sterile field around the tray. (Ex. 1003, ¶ 18; Ex. 1010, 53.) The practitioner places an underpad beneath the patient. (Ex. 1003, ¶ 18; Ex. 1010, 53.) The practitioner washes his or her hands, or uses a hand sanitizer include in the kit. (Ex. 1003, ¶ 18; Ex. 1010, 53.)

Afterwards, the practitioner dons gloves included in the kit and places a fenestrated drape on the patient. (Ex. 1003, ¶ 18; Ex. 1010, 53.)

The practitioner cleans the patient using cleansing balls or swab sticks, which have been soaked with an iodine solution. (Ex. 1003, ¶ 19; Ex. 1010, 53.) The practitioner lubricates the Foley catheter inside the tray using an included lubricant solution. (Ex. 1003, ¶¶ 20-21.) Alternatively, the practitioner squirts lubricant directly into the patient's urethra using the tapered tip of a lubricant syringe. (Ex. 1003, ¶ 22 Ex. 1010, 53.) The catheter is then inserted by the practitioner. (Ex. 1003, ¶ 23; Ex. 1010, 53.)

The practitioner attaches an inflation syringe (filled with sterile water) to the inflation port of the Foley catheter. (Ex. 1003, ¶ 23; Ex. 1010, 53.) In some facilities, this step may be performed earlier in the process to allow for the inflation of a test balloon. (Ex. 1003, ¶ 23.) The practitioner next inflates the balloon of the catheter. (Ex. 1003, ¶ 23; Ex. 1010, 53.) A securement device is fastened to the catheter to keep it in place. (Ex. 1010, 53.)

An irrigation procedure is performed with a urethral catheter to remove blood clots, which reduce or inhibit the flow of urine. (Ex. 1003, ¶ 26.) Irrigation procedures are often performed with patients that are already catheterized to improve the flow of urine. (Ex. 1003, ¶ 27.) In that case, the Foley catheter must be disconnected from the drainage tubing that connects it to the drainage bag. (Ex.

1003, ¶ 27.) Using an irrigation syringe, the practitioner draws up 60mL of saline solution and injects the catheter. (Ex. 1003, ¶ 27.) The fluid is withdrawn and dispensed into a collection tray. (Ex. 1003, ¶ 27.) The injection and withdrawal of the saline solution are performed repeatedly until the clots are removed and urine can flow again. (Ex. 1003, ¶ 27.) The Foley catheter is then reconnected to the drainage bag via the drainage tubing. (Ex. 1003, ¶ 27.)

III. THE '088 PATENT

A. Summary

The '088 patent is directed to a tray for storing medical devices such as a catheter and related medical devices. (Ex. 1001, 1:34-38.) The '088 patent focuses on tray structure, components in the tray and functional aspects of the tray. As discussed above, and in more detail below, all these aspects were well-known in the art by 2009.

1. Tray structure

As shown in annotated Fig. 1 (below), tray 100 provides multiple compartments, including a first compartment 101 (blue), a second compartment 102 (red), and a third compartment 103 (green). (Ex. 1001, 5:12-18; Fig. 1.) The multiple compartments store various medical devices (described below) in a one-level ("single layer") tray rather than a multi-level, stacked-configuration. (Ex. 1001, 9:4-9; Fig. 7.)

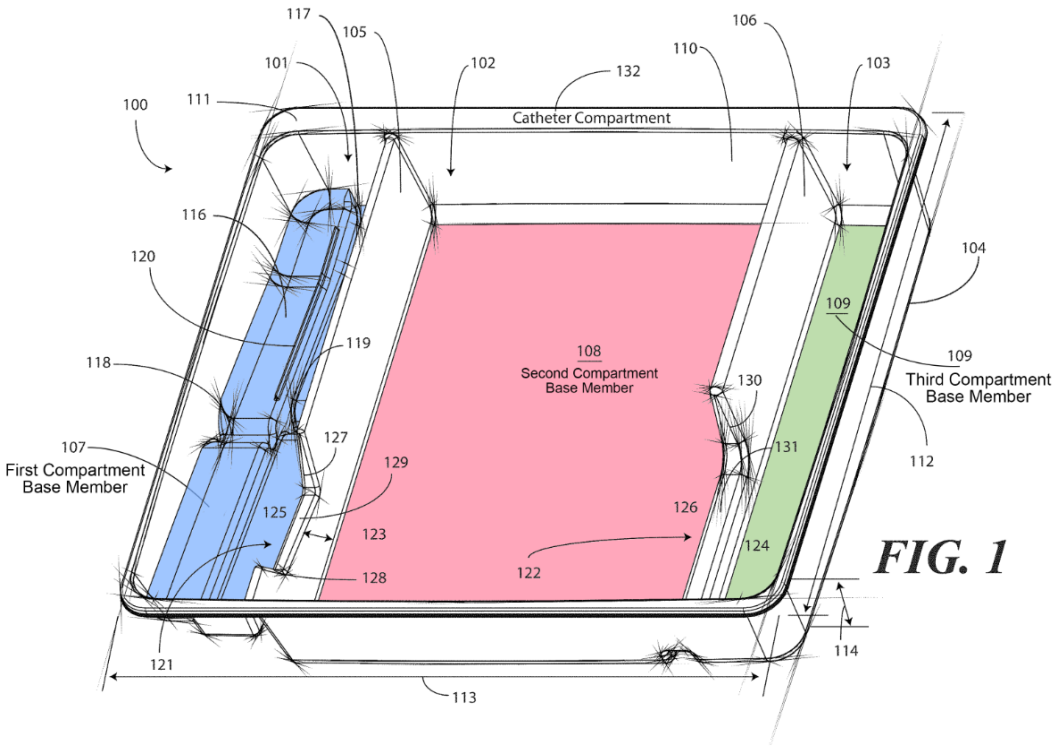

As shown in annotated Fig. 10 (below), when packaged, the tray is covered in a “CSR Wrap 1000” (green) and further enclosed in a “sterile wrap 1002 such as a thermally sealed bag” (pink). (Ex. 1001, 11:45-46; 11:51-52; Fig. 10.)

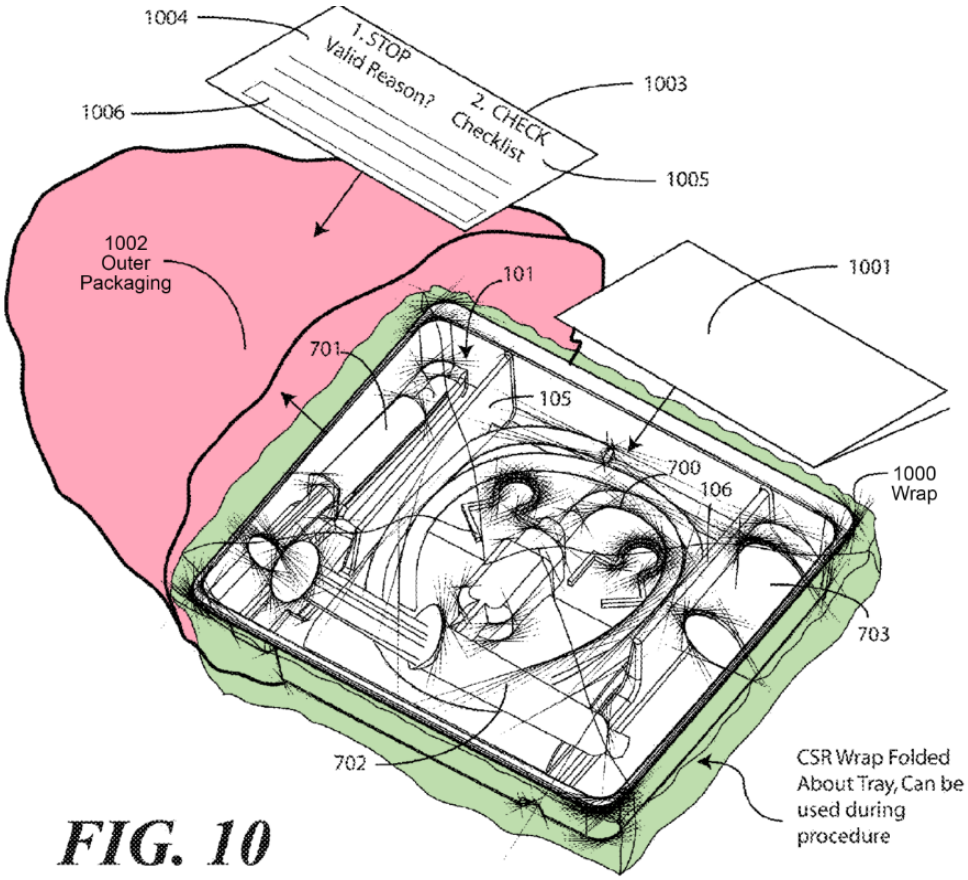

FIG. 10

2. Components of the tray

As shown in annotated Fig. 7 (below), the first compartment 101 accommodates syringes 701, 702 (red, green) containing sterile water or lubricants. (Ex. 1001, 4:18-21; 9:24-26.) The second compartment 102 accommodates a catheter assembly 700 (blue) and fluid bag. (Ex. 1001, 4:18-21.) The third compartment 103 accommodates a specimen container 703 for capturing samples taken from the patient via the catheter (Ex. 1001, 4:22-23, 5:64-65.)

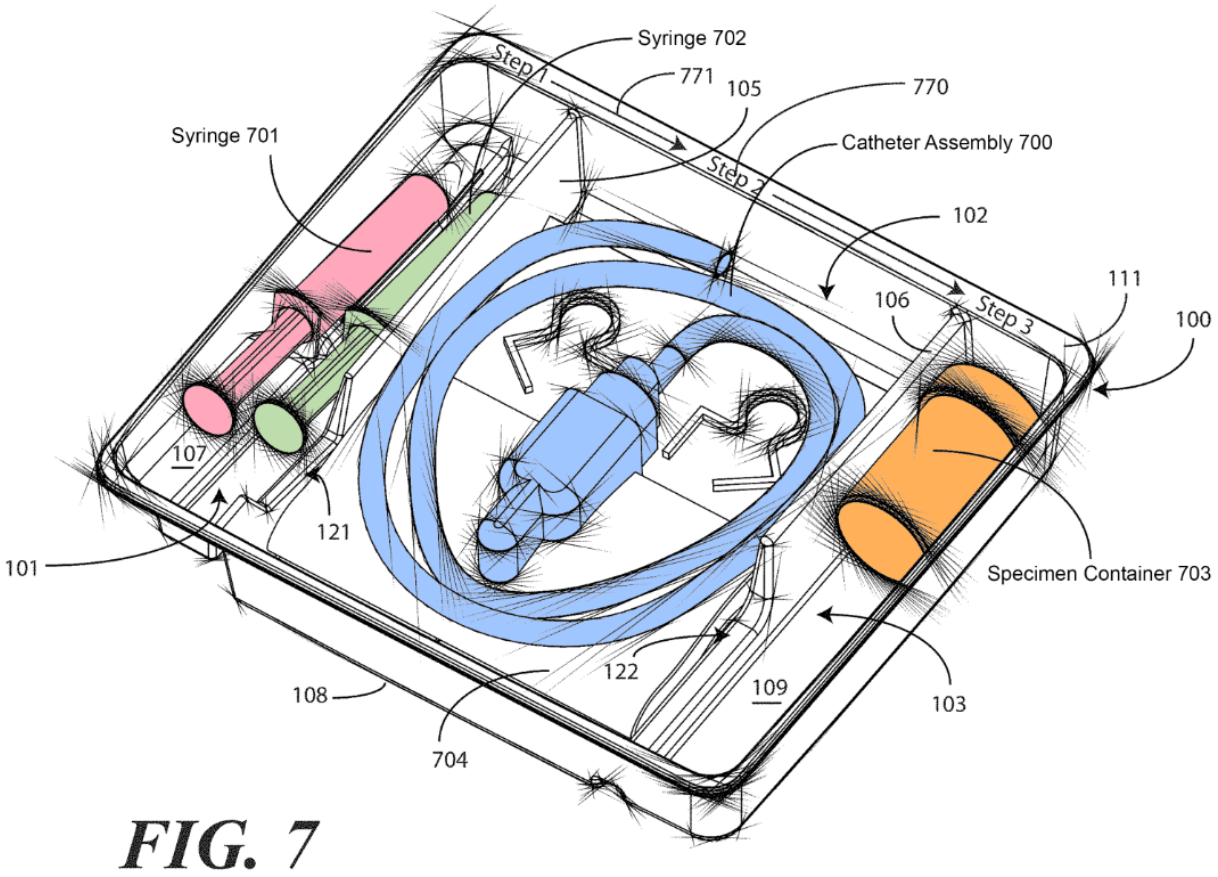

FIG. 7

Additional objects can be included with the tray, including one or more towels, a drape to cover the patient, rubber gloves, hand sanitizing materials, swab sticks, a securement device, printed instructions, and so forth. (Ex. 1001, 5:46-51.)

3. Functional aspects of the tray

Compartments of the tray can have "multi-purpose functionality." (Ex. 1001, 4:32-33.) For example, a compartment can both accommodate a syringe of lubricating jelly and be used as a lubricating jelly applicator. (Ex. 1001, 4:34-37.) For instance, the syringe of lubricating jelly is stored in the first compartment,

which is configured with a stair-stepped contour that allows the first compartment to be used as a lubricant applicator by dispensing lubricating jelly along a lower step portion and passing the catheter through the dispensed lubricating jelly. (Ex. 1001, 7:38-59.)

The tray orders objects "in accordance with their use during the procedure." (Ex. 1001, 5:59-60.)

The tray provides a "medical services provider with mnemonic devices instructing them in which order to use each device." (Ex. 1001, 4:26-27.) For example, the first compartment includes an inclined, stair-stepped base that presents the plunger of each syringe at an easy to reach angle and at different heights based upon order of use. (Ex. 1001, 4:28-31.) This arrangement serve as a mnemonic reminder, because "it may be intuitive that a syringe placed on a higher step portion may need to be used first," the intuition enforced "when the higher step portion is disposed farther to the left in a left-to-right usage configuration." (Ex. 1001, 6:18-22.)

B. Effective Filing Date

Application no. 12/495,148, filed on June 30, 2009 is the earliest filed application to which the '088 patent purports to claim priority. Bard assumes—for this Petition only—that the challenged claims are entitled to a priority date of June 30, 2009. Bard reserves the right to challenge this priority date.

C. Prosecution History

The examination of the ’088 patent was short and not particularly robust.

Initial filing. The ’088 patent was filed on July 7, 2015 as application no. 14/793,455. Applicants presented a sole independent claim directed to a medical procedure kit comprising a tray, two syringes, a layer of wrap material and an outer packaging. (Ex. 1004, 479.)

Office Action. On May 3, 2017, the Examiner rejected independent claim 1 based on U.S. Patent No. 4,523,679 to Paikoff et al. (Ex. 1021), but found dependent claims 9, 11 and 12 to be allowable. (Ex. 1004, 390-391, 398.) These claims depended from independent claim 1 and dependent 6. (Ex. 1004, 480.) Claim 6 recited that the two syringes are ordered within the tray in accordance with their use during a catheterization procedure and that the tray comprises two compartments, with the first compartment supporting the two syringes. Claim 9 further recited a base member of the first compartment defining a mnemonic device. Claims 11 and 12 recited syringes at different heights based upon their use in a catheterization procedure.

Interview. Applicants’ counsel conducted an interview with the Examiner on June 22, 2017. They discussed new claims directed to a single tray having two syringes and a medical assembly comprising a Foley catheter, a coiled tubing and a

fluid drain bag. The Examiner explained that a preliminary search did not reveal "a catheter tray with two syringes and a Foley catheter." (Ex. 1004, 198.)

Response. Applicants' counsel then submitted an amendment. Claim 1 was amended to include the recitations of claims 6 and 9. New claims 27 and 39 were added to recite the recitations of claim 1, 6 and 11 or 12. Moreover, Applicants' counsel added new claims 47, 63 and 79 directed to two syringes and a Foley catheter. (Ex. 1004, 132-145.)

IDS. On the same day as the Response, and *after* Examiner had indicated allowable subject matter, Applicants' counsel submitted a lengthy IDS spanning 21 pages and listing 375 references, including Solazzo. (Ex. 1004, 151-175.)

Allowance. On July 20, 2017, the Examiner allowed the claims with an Examiner's Amendment. With respect to claims 1, 27 and 39, the Examiner addressed certain references—but not Solazzo—and found them lacking. According to the Examiner, the closest prior art (Paikoff) did not disclose or suggest a mnemonic device or compartments that support multiple syringes at different heights according to their order of use in a catheterization procedure or both. (Ex. 1004, 11.) The Examiner also addressed additional references that disclosed mnemonic devices but not in the context of a catheterization procedure. (Ex. 1004, 8-17.)

With respect to claims 47, 63 and 79, the Examiner found that the addressed art failed to disclose a Foley catheter, a coiled tubing, and a fluid drain bag. (Ex. 1004, 11, 14.)

Issuance. The ’088 patent issued on August 29, 2017. Original claims 1, 27, 39, 47, 63 and 79 issued as claims 1, 25, 37, 45, 61 and 77, respectively.

D. Level Of Ordinary Skill

A person of ordinary skill in the art (“POSITA”) in the field of the ’088 patent in 2009 would have at least a Bachelor of Science degree in Packaging Science or Package Engineering, chemical engineering, mechanical engineering, or industrial design. Optionally, the POSITA would have had a bachelor’s degree in an alternative technical field and about two years’ experience in the packaging of medical devices. This person would also have had an understanding of and experience with thermoforming and the design of thermoformed packages. One of ordinary skill in the art would not need to be a practitioner that would use the claimed methods or products (*i.e.*, catheterization trays), but would have learned about the procedures from those skilled in the procedures for which the claimed products and methods would be used (*e.g.*, a nurse). (Ex. 1002, ¶¶ 14-16.)

E. Litigation And Other Matters

Patent Owner has asserted the ’088 patent against Bard in a co-pending litigation: *Medline Industries, Inc. v. C. R. Bard, Inc.*, 1:17-cv-07216 (N.D. Ill.).

This co-pending litigation will be referred herein as *Medline III*, because Patent Owner has asserted other patents against Bard in two other pending litigation matters: (1) *Medline Industries, Inc. v. C. R. Bard, Inc.*, 1:14-cv-03618 (N.D. Ill.) ("*Medline I*") and (2) *Medline Industries, Inc. v. C. R. Bard, Inc.*, 1:16-cv-03529 (N.D. Ill.) ("*Medline II*").

In *Medline I*, Bard requested *inter partes* review of U.S. Patent Nos. 8,448,786 (IPR2015-00509); 8,678,190 (IPR2015-00514); and 8,631,935 (IPR2015-00511 and -00513). The Board instituted review of certain claims in the 513 and 514 IPR proceedings. Patent Owner subsequently cancelled those claims, thereby terminating the proceedings. The Board denied institution in the two other IPR proceedings. Importantly, none of these IPR proceedings was based on Solazzo—the primary reference in this Petition.

IV. CLAIM CONSTRUCTION

A claim of an unexpired patent is given the "broadest reasonable construction" in light of the specification during *inter partes* review. 37 C.F.R. § 42.100(b). For the purposes of this Petition, Bard submits that the terms of the challenged claims of the '088 patent should be accorded their ordinary and customary meanings as understood by one of ordinary skill in the art and consistent with the '088 patent's disclosure. Accordingly, no term or phrase requires specific construction to find that the challenged claims are invalid.

Nevertheless, Bard notes that Patent Owner has proposed constructions in district court litigation. The first Patent Owner construction below is from *Medline III*, where the ’088 patent is at issue, while the second Patent Owner construction is from *Medline II*. (Ex. 1022; Ex. 1023, 13.)

Claim Term Or Phrase	Patent Owner Construction
Barrier	structure that separates one compartment from another and prevents or blocks movement between the two
Lubricating jelly application chamber/ compartment	a compartment or channel where lubrication is applied

The application of the art in this Petition would meet the above claim language under Patent Owner’s constructions. Indeed, the application of art in this Petition would also meet Bard’s constructions of these terms in *Medline II* and *III*. (Ex. 1023; Ex. 1024.)

V. THE MANNER OF USING THE CLAIMED KIT DOES NOT DIFFERENTIATE THE KIT OVER THE PRIOR ART

Before addressing the individual Grounds, it is important to note the claimed kits have a number of limitations directed to the manner in which the kit is used. For example:

- "the *lubricating jelly application compartment* to receive lubricating jelly from one of the first syringe or the second syringe to lubricate at least some of the Foley catheter" (claim 51).

The italicized limitation cannot differentiate over the grounds in this Petition if the prior art of those grounds discloses the same structure. Apparatus claims, like a "medical procedure kit" of the challenged claims, cover what a device is, not what a device does. *See* MPEP § 2114 (citing *Hewlett-Packard Co. v. Bausch & Lomb Inc.*, 909 F.2d 1464, 1469 (Fed. Cir. 1990)). More specifically, "a claim containing a 'recitation with respect to the manner in which a claimed apparatus is intended to be employed does not differentiate the claimed apparatus from a prior art apparatus' if the prior art apparatus teaches all the structural limitations of the claim." *Id*. (quoting *Ex parte Masham,* 2 USPQ2d 1647 (Bd. Pat. App. & Inter. 1987).

Here, if the prior art discloses all the recited chambers or compartments, as does Solazzo, a "lubricating jelly application compartment" does not differentiate claim 51 from Solazzo. What is applied to the compartment is directed to how the compartment is used.

VI. "PRINTED INSTRUCTIONS" DESERVE NO PATENTABLE WEIGHT

A number of the challenged claims are directed to "printed instructions." For example, claim 52 recites that the medical procedure kit further comprises

"printed instructions for using the single tray." Claim 53, which depends from claim 52, further recites that the printed instructions are "to instruct application of lubricating jelly to the Foley catheter using a lubricating jelly application compartment of the single layer tray." Such claims deserve no patentable weight. If the claimed kit is known—which Bard will show below—then the addition of printed instructions does not render the kit patentable. *In re Ngai*, 367 F.3d 1336, 1339 (Fed. Cir. 2004) ("[Ngai] is not, however, entitled to patent a known product by simply attaching a set of instructions to that product.").

Even if the limitations are given weight, Bard herein presents grounds with the reference Franks-Farah (Ex. 1007) that discloses the recited printed instructions.

VII. PRECISE REASONS FOR RELIEF REQUESTED

Pursuant to 37 C.F.R. § 42.104(b), Bard respectfully requests cancellation of claims 45-58, 60-74, 76-90 and 92 of the '088 patent based on the following references:

Prior Art Reference	**Abbreviation**
U.S. Patent No. 7,278,987 to Solazzo	"Solazzo" (Ex. 1005)
U.S. Patent No. 3,329,261 to Serany, Jr. et al.	"Serany" (Ex. 1006)
U.S. Patent No. 6,840,379 to Franks-Farah et al.	"Franks-Farah" (Ex. 1007)

Prior Art Reference	**Abbreviation**
U.S. Patent No. 3,166,189 to Disston	"Disston" (Ex. 1008)
U.S. Patent No. 5,931,303 to Salvadori	"Salvadori" (Ex. 1009)
U.S. Published Application No. 2008/0249476 to Bierman et al.	"Bierman" (Ex. 1020)

The statutory grounds for the challenge of each claim are set forth below. All of the statutory citations are pre-AIA.

Ground	**35 U.S.C. §**	**Claim**	**Prior Art Reference(s)**
1	103(a)	45-48, 50-51, 55-58, 60-64, 66-67, 71-74, 76-80, 82-83, 87-90, 92	Solazzo, Serany, Disston
2	103(a)	49, 54, 65, 70, 81, 86	Solazzo, Serany, Disston, Salvadori
3	103(a)	52-53, 68-69, 84-85	Solazzo, Serany, Disston, Franks-Farah
4	103(a)	55, 71, 87	Solazzo, Serany, Disston, Bierman

Below, Bard discusses why the challenged claims are unpatentable under the statutory grounds raised, including by specifying how and where the prior art satisfies each limitation of each challenged claim, as required by 37 C.F.R. § 42.104(b)(4). Bard's showing establishes a reasonable likelihood that it will prevail on each ground of invalidity as to each challenged claim. Bard also

provides the Declarations of Michael Plishka (Ex. 1002) and Dr. Edward Yun (Ex. 1003) to support its showing.

A. Ground 1 – Obvious Based on Solazzo, Serany, and Disston

1. Summary of Solazzo

Solazzo was filed on July 9, 2004, and issued on October 9, 2007. Solazzo is therefore prior art to the ’088 patent pursuant to at least 35 U.S.C. § 102(b).

Solazzo is directed to an ergonomic, single layer catheterization/irrigation tray having multiple compartments, including recessed area 3, compartment 27 and wells 31, 33 as shown in annotated Figure 1 below.[1] (Ex. 1005, 4:15-25; Fig.1; Ex. 1002, ¶¶ 118-136.)

[1] It should be noted Solazzo uses the terms “compartment” and “well” interchangeably. For example, he refers to compartments 3 and 27 as “irrigation well” and “drainage well.” (Ex. 1005, 5:12-15; Ex. 1018, [0044].)

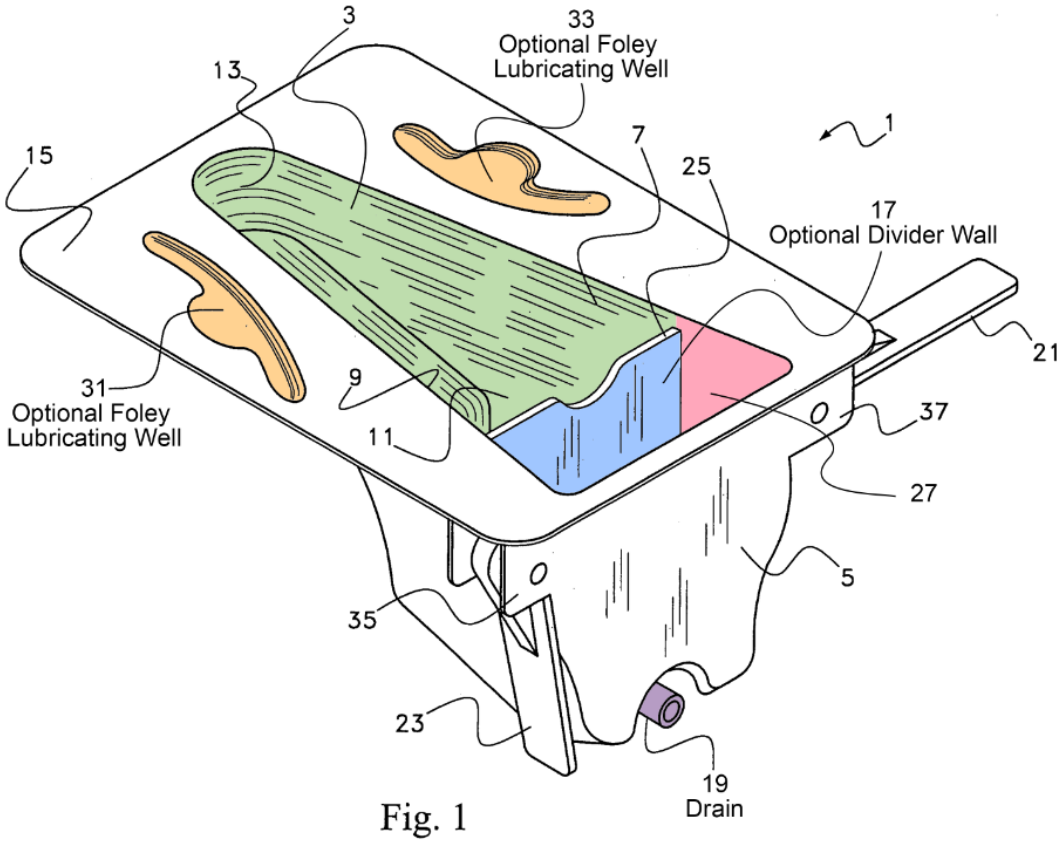

Fig. 1

The recessed area 3 / compartment 27 is trapezoidal-shaped with a "non constant depth" provided by a terraced bottom 11 having low area 11A and shallow area 11B as shown in annotated Figure 2 below. (Ex. 1005, 3:61-66; Fig. 5.) Drain 19 may connect to drain hole(s) in the terraced bottom 11 and to tubing for other receptacles. (Ex. 1005, 4:12-15; Figs. 1-2.)

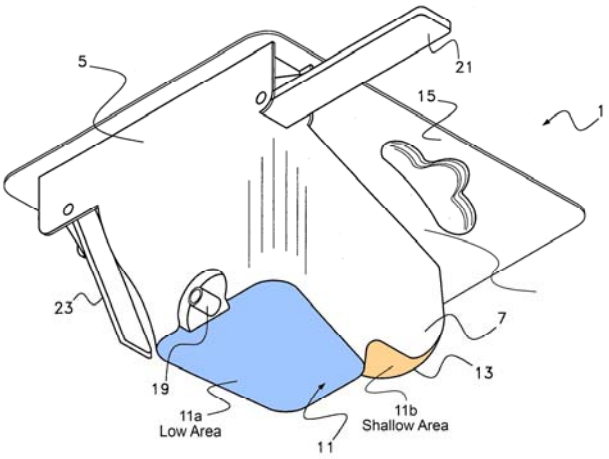

Fig. 2

Solazzo further discloses his invention in the context of kit as shown in annotated Fig. 8 below. The recessed area 3 and compartment 27 store medical devices included in tray kit 100, including a Foley catheter, urinary tract lubricant, surgical gloves, inflation syringe, irrigation syringe, evacuation tubing, and antiseptic solutions. (Ex. 1005, 3:14-24, 4:1-8; Fig. 8.) In the tray kit 100, inflation syringe 110 is stored at low area 11A, while lubricant fluid 140 is stored at shallow area 11B. (Ex. 1005, 4:41-45; Fig. 8.)

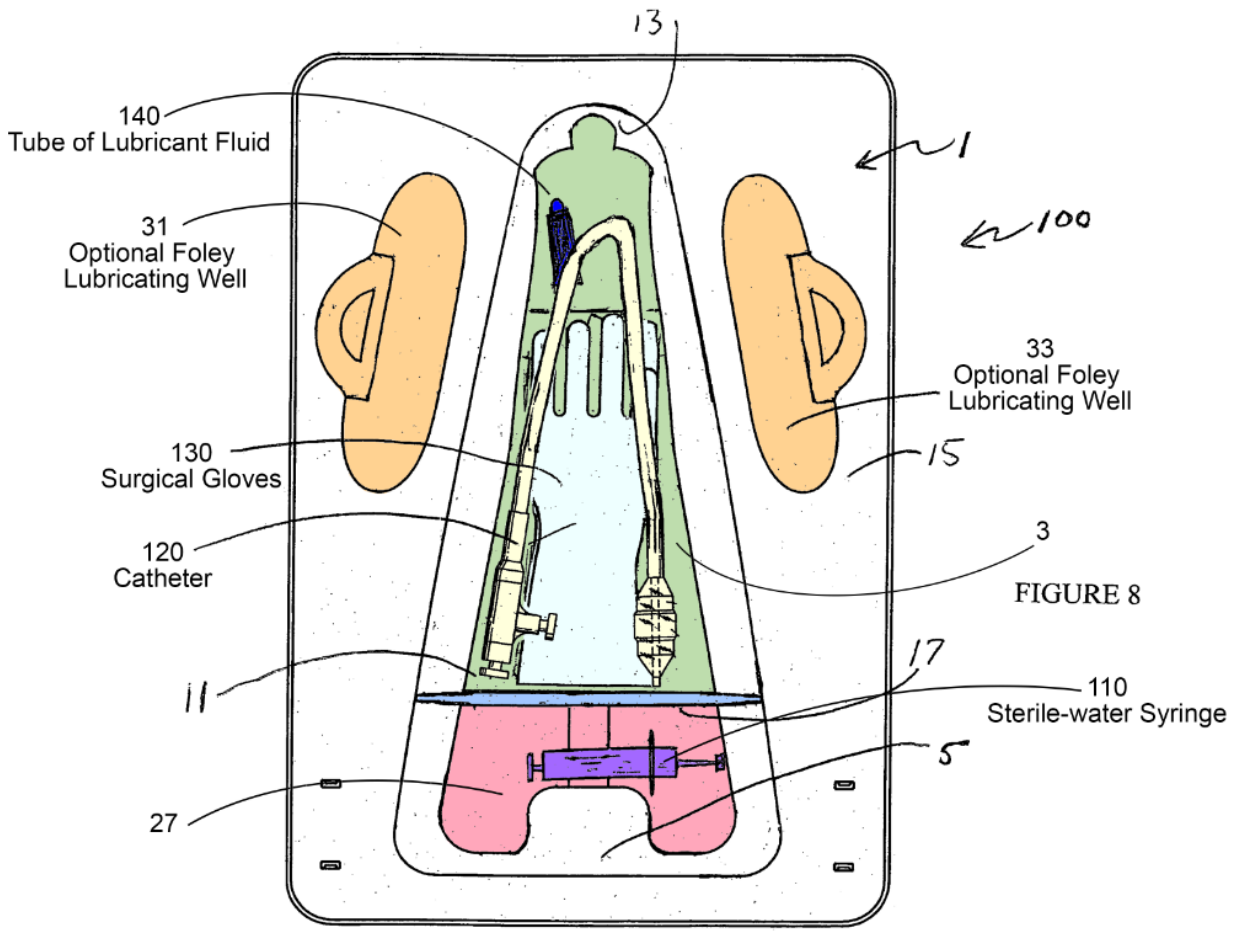

In use, the recessed area 3 and compartment 27 fit between the legs of "[a] patient requiring a urological procedure" while flange 15 and wing supports 21, 23 rest atop the legs when the patient is seated. (Ex. 1005, 1:8-12, 3:66-4:10, 4:26, 4:32-33; Fig.1.) A surgeon proceeds to "evacuate the bladder of its contents, urine and/or clots" using kit 100, e.g., by wearing the gloves, lubricating and inserting the catheter, and inflating with inflation syringe. (Ex. 1005, 4:32-33, 46-48.)

<u>Two Embodiments: "Divider Wall" and "No Divider Wall"</u>

As shown below on the left, Solazzo discloses an embodiment where a divider wall 17 divides recessed area 3 and compartment 27 into two compartments. This will be referred herein as the "divider wall" embodiment. Solazzo, however, notes that the divider wall is "optional." (Ex. 1005, 4:15-16.) As shown below on the right, Figure 1 has been modified to remove the divider wall to illustrate a single compartment labeled 3/27. This will be referred herein as the "no divider wall" embodiment. In this Petition, the grounds are based on the "divider wall" embodiment.

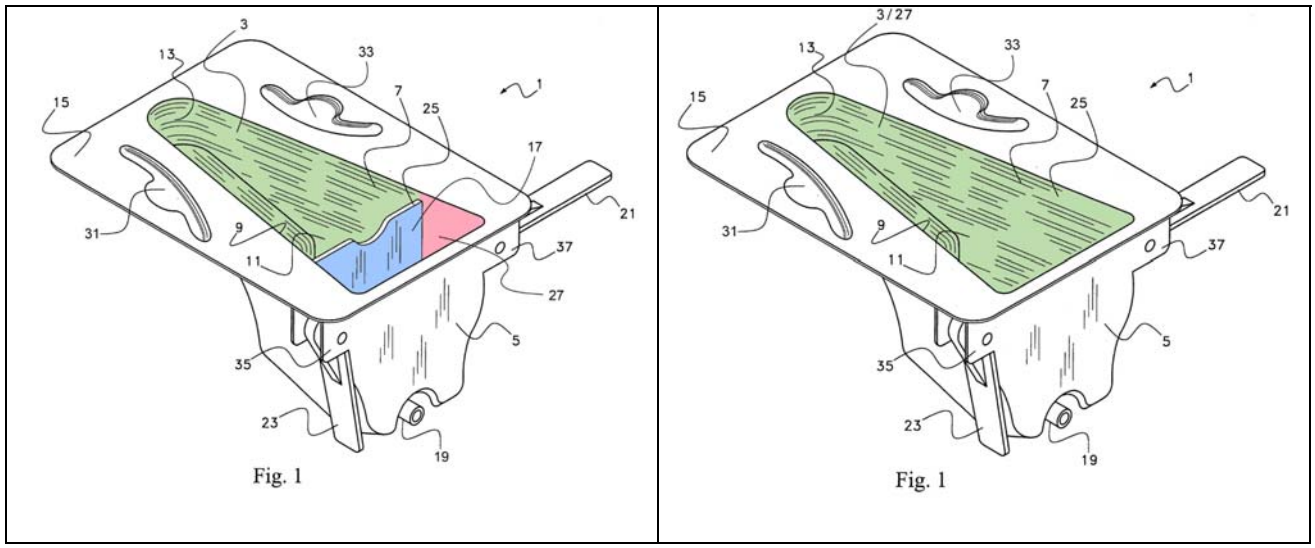

2. Summary of Serany

Serany issued on July 4, 1967. Serany is therefore prior art to the '088 patent pursuant to at least 35 U.S.C. § 102(b).

Serany is directed to a double-wrapped, sterile package providing catheterization components ready for use in the order needed. (Ex. 1006, 1:8-16,

1:60-63, 3:63-4:2; Figs. 1-3, 5; Ex. 1002, ¶¶ 137-142.) The package includes a multi-compartment single-layer tray 12 mounted on a box 10 and enclosed with a sealed outer envelope 16 and an inner wrap 14 that unfolds to provide a sterile field work area (as shown in the figures in Section II of this Petition). (Ex. 1006, 1:60-72, 2:17-20; Figs. 1-5.)

Serany's compartments and depressions suitably accommodate components received therein, *e.g.*, a prefilled syringe 45 of sterile water is stored in depression 44, which includes indentations 44d along the sides to accommodate the syringe's flange. (Ex. 1006, 2:40-41, 3:6-22; Figs. 6-7.)

Serany's package further includes a waterproof underpad 20, gloves 22, fenestrated drape 24, cleansing solution bottle 30, rayon balls 34, forceps 36, lubricating jelly pouch 40, safety pin 41 and rubber band 42, and a "ready for use" Foley catheter 48 preconnected to a collapsible drainage bottle 46 via tube 49 as shown in annotated Figure 5 below. (Ex. 1006, 2:22-33, 2:57-70, 3:1-5, 3:23-26, Figs. 5-6.)

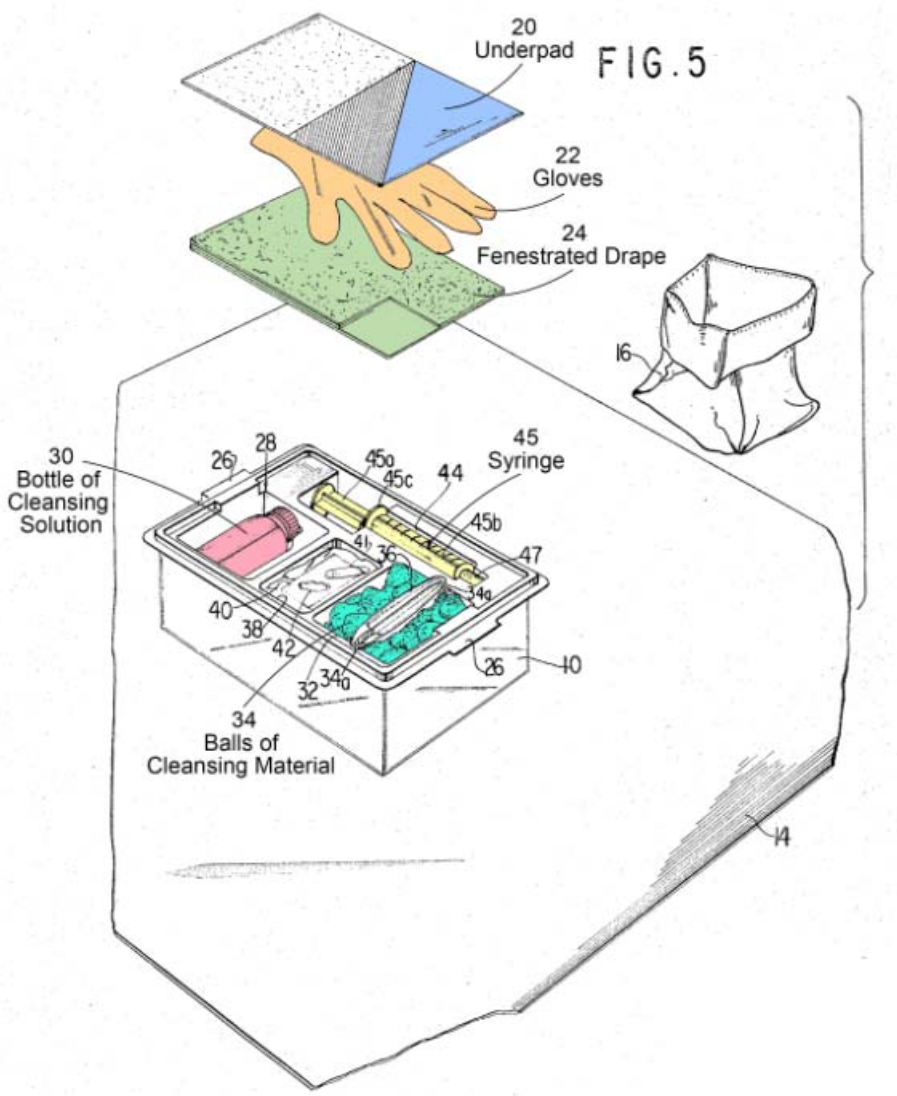

The collapsible drainage "bottle 46 is made of flexible plastic material having fold lines 46a ... so that it may be folded flat for storage ... and expanded into cube form when in use. The bottle is shown in FIG. 6 partially expanded for illustration purposes." (Ex. 1006, 3:26-31; Fig. 6.) The catheter and tubing are coiled in the box about the bottle as shown in annotated Figure 6 below. (Ex. 1006, 3:33-35.)

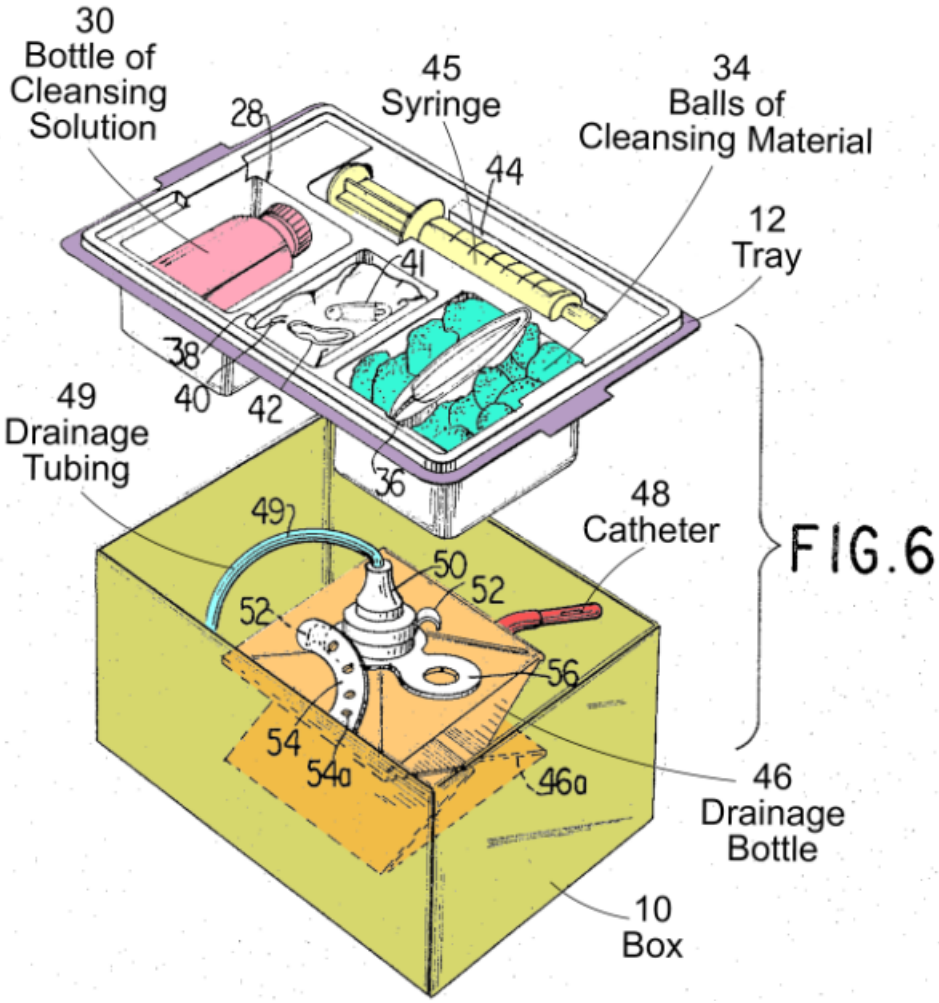

3. Summary of Disston

Disston issued on January 19, 1965. Disston is therefore prior art to the ’088 patent pursuant to at least 35 U.S.C. § 102(b).

Disston is directed to a double-wrapped catheterization tray package that “provide[s] for the first time a complete, properly organized, conveniently arranged, sterile set of equipment for catheterization, the entire drainage system being pre-assembled.” (Ex. 1008, 1:59-67, 2:60-63; Figs. 2-3.) The single-level

tray 2 contains catheterization devices "arranged in such order and position as to be most conveniently available when the container is opened." (Ex. 1008, 2:15-23.) The tray is slidably-received in an open-ended sleeve 1 having a flap 3 folded downwardly over an edge of the tray, and further wrapped in a plastic outer envelope. (Ex. 1008, 1:59-67, 2:23-26; Figs. 2-3.)

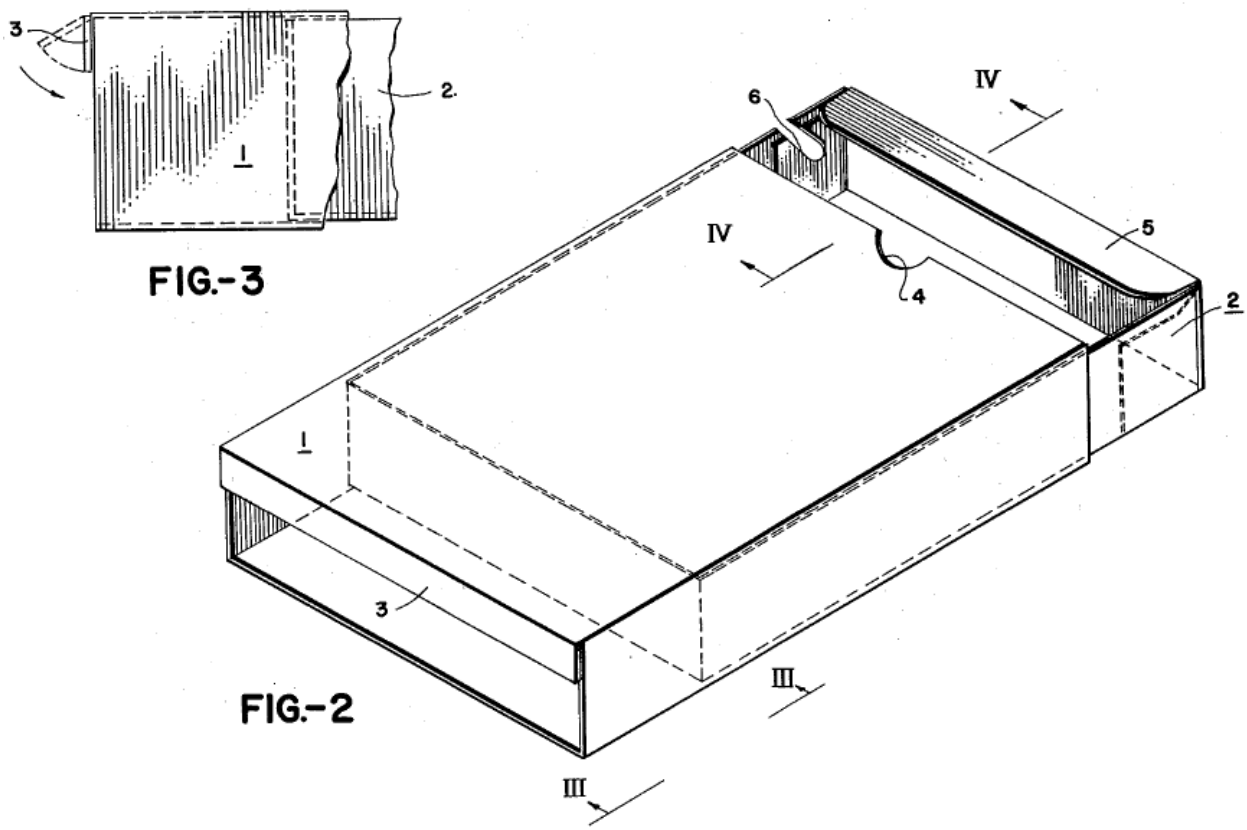

When opened, the tray presents contents including gloves, cleansing solution, protective pad or sheet, lubricant, sterile water packet, syringe, "and most importantly, a pre-assembled catheter-drainage tube-drip chamber-drainage bag and hanger, assembly, sterile and ready for use immediately." (Ex. 1008, 1:26-35, 2:41-52; Fig. 1.) The pre-assembly "not only saves time and trouble but practically

eliminates the danger of faulty connections and loss of sterility, inherent in the former system." (Ex. 1008, 1:42-46; Ex. 1002, ¶¶ 143-144.)

4. The Combination

As set forth below, Solazzo in view of Serany and Disston discloses all the elements in the claims in this ground and renders those claims as obvious.

1) Claim 45

(a) ***Preamble and 45[a]:*** *"A medical procedure kit ..."*

Solazzo discloses "*[a] medical procedure kit, comprising: a single layer tray having a first compartment for receiving syringes and a second compartment for receiving a medical assembly*."

Solazzo discloses a tray with recessed area 3 and compartment 27 separated by a divider wall 17 as shown in Figure 1 below. (Ex. 1005, 2:61-63.)

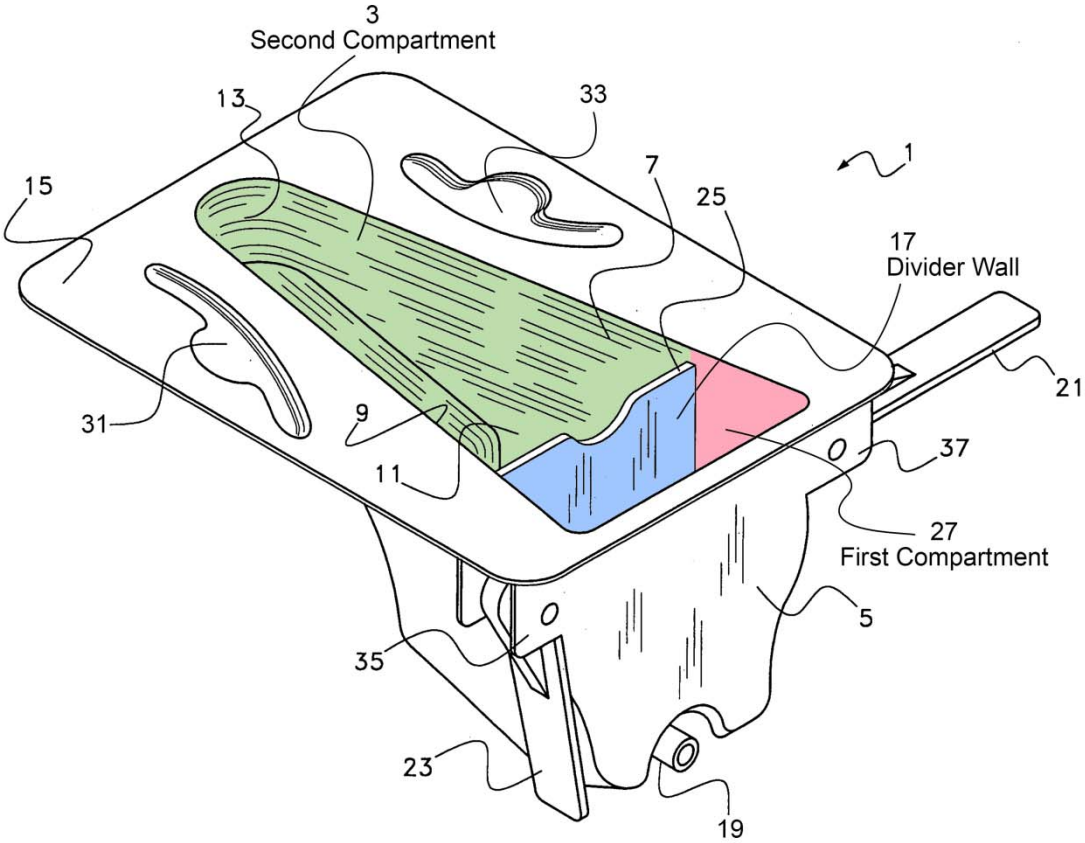

Fig. 1

The divider wall 17 creates "two separate compartments": a first compartment 27 and a second compartment 3.

The second compartment (compartment 3) holds a medical assembly (catheter 120), as shown in Figure 8 below. Further, the second compartment is structured to receive or accommodate a closed-system Foley catheter, i.e., a catheter that is pre-connected to a drainage bag via coiled tubing, as set forth at claim 45[c] below. (Ex. 1005, Figs 1, 5, 10.)

The first compartment (compartment 27) is a compartment for receiving syringes. Specifically, Figure 8 below shows compartment 27 holding an inflation syringe 110:

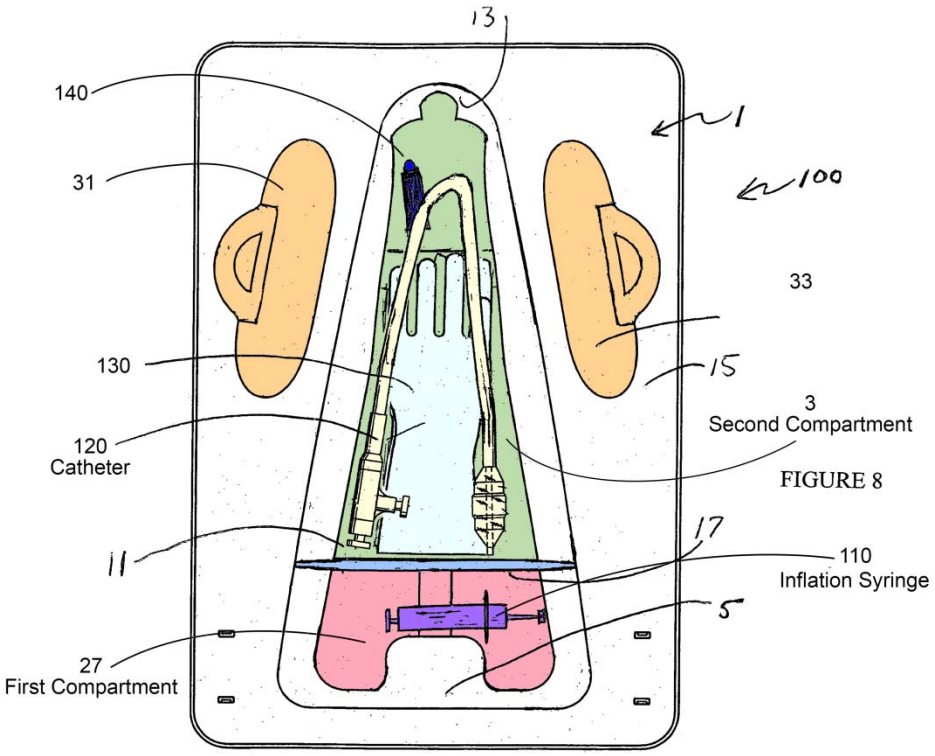

Further, the first compartment is structured to easily receive or accommodate multiple syringes, for the reasons set forth at claim 45[b] below. (Ex. 1002, ¶¶ 366-371.)

(b) ***45[b]:*** *"a first syringe and a second syringe ..."*

Solazzo discloses "*a first syringe and a second syringe disposed within the first compartment*."

Solazzo discloses a kit with two syringes: "[t]he kit includes: ... (e.) an inflation syringe for inflation of a catheter with fluid; (f.) irrigation syringe." (Ex. 1005, 3:15-24.)

Compartment 27 of Solazzo holds at least inflation syringe 110. (Ex. 1005, Fig. 8.) The location of the "irrigation syringe" within the tray of Solazzo is not expressly provided. But there are only two locations where it could be held: compartment 3 or compartment 27. Compartment 27 is a natural place to store the irrigation syringe because it already holds the inflation syringe.

Solazzo also discloses a "tube of lubricant 140." The *tube* is replaceable with a *syringe*, for the reasons provided at claims 46, 62, and 78 below. Compartment 27 could also hold the lubrication syringe in compartment 27 along with the inflation syringe such that compartment 27 holds a first and second syringe.

Modified Figure 8 below shows the first compartment accommodating two syringes: an inflation syringe 110 and an irrigation or lubrication syringe. (Ex. 1002, ¶¶ 372-376.)

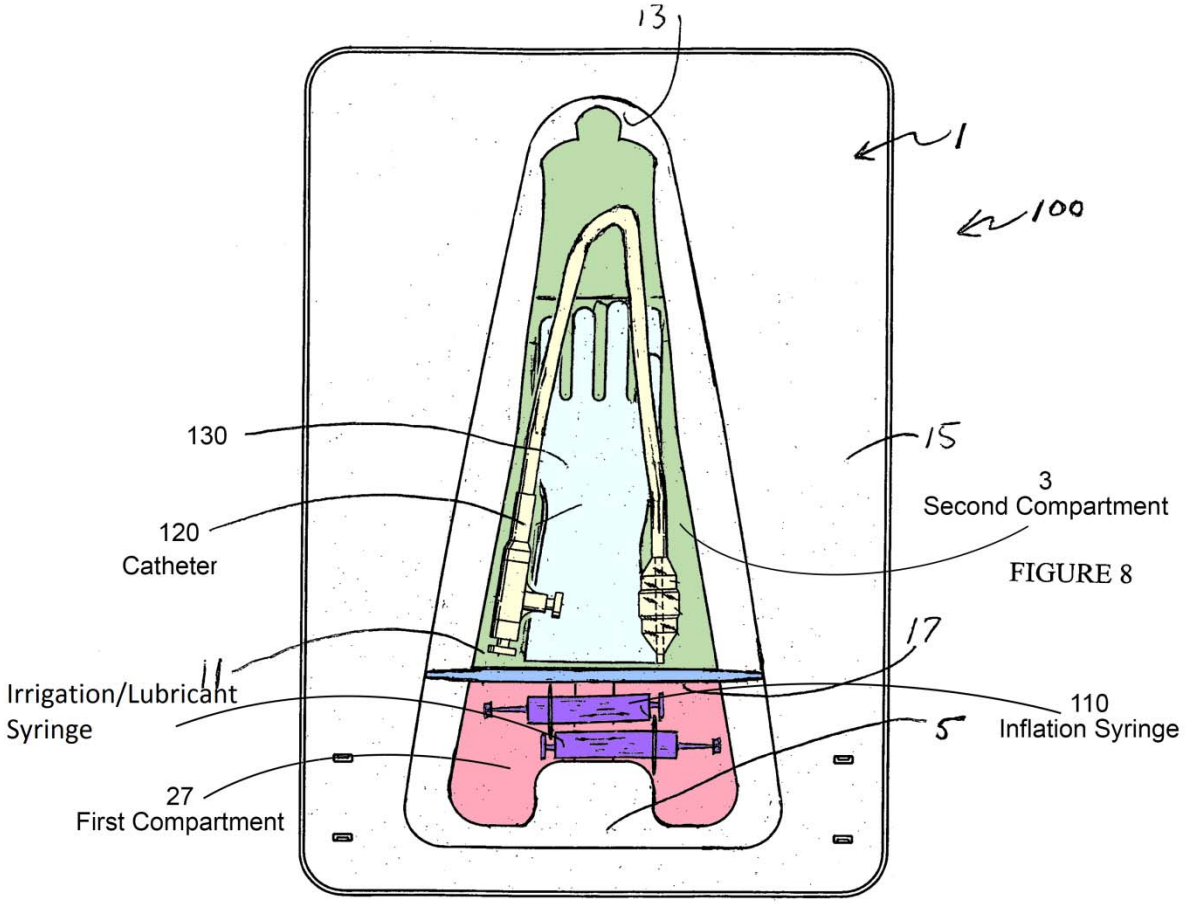

It was well-known in the art to group like items in the same compartment of a tray. For example, Serany discloses grouping multiple balls of cleansing material in the same compartment: "The tray also has a depression 32 for balls 34 of cleansing material, e.g. rayon, which are used to prepare the patient for catheterization." (Ex. 1006, 2:57-61.) Serany further describes an object of the invention as making it easier for physicians to perform a catheterization procedure because "all the components [are] arranged in logical step-by-step order to facilitate the nurses or physicians task." (Ex. 1006, 1:31-35; Ex. 1002, ¶ 377.)

Additionally, Imai (Exs. 1011 and 1012), directed to a package that organizes treatment tools with high usability, discloses grouping syringes in the same compartment of a catheter tray, as shown in Figure 1 below:

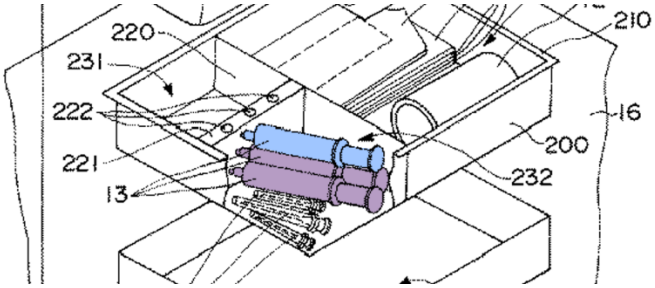

As shown by Imai, compartment 27 could hold all three syringes (inflation, irrigation, and lubricant) in a stacked configuration. (Ex. 1002, ¶¶ 378-379.)

In view of Serany, a POSITA would have been motivated to group at least two syringes in the first compartment of Solazzo to arrange them in a "logical step-by-step order to facilitate the nurses or physicians task." A POSITA would have further been motivated to group the syringes together in the first compartment to remove the lubricant and/or irrigation syringe from compartment 3, which contains the Foley catheter. This would ensure the lubricant tube 140 (replaceable with a syringe) does not damage the Foley catheter during shipment of the tray. (Ex. 1002, ¶¶ 380-382.)

Accordingly, Solazzo discloses this claim element. Furthermore, the combination of Solazzo in view of Serany discloses this claim element.

(c) ***45[c]:*** *"... a coiled tubing coupled between a fluid drain bag and a Foley catheter"*

Claim 45 requires "*the medical assembly disposed in the second compartment, wherein the medical assembly comprises a coiled tubing coupled between a fluid drain bag and a Foley catheter*."

Solazzo discloses a medical assembly (i.e., Foley catheter 120) disposed in the second compartment (compartment 3), but does not expressly mention a Foley catheter that is *pre-connected* to a drainage bag via coiled tubing.

Solazzo discloses a "urological catheterization/irrigation tray." The tray may be used to "evacuate the bladder of its contents, urine and/or clots." (Ex. 1005, 4:26-33.) A Foley catheter is an *indwelling* catheter (as opposed to an intermittent or 'in'-and-'out' catheter"). (Ex. 1003, ¶ 11.) Solazzo teaches a catheterization kit, including catheterization devices such as a Foley catheter and inflation syringe. (Ex. 1003, ¶¶ 30-31.) Solazzo notes that a patient may "discharge or be relieved into the tray." (Ex. 1005, 2:42-46.) However, discharge of urine into the tray is not a long-term solution for an indwelling Foley catheter that remains in a patient for a period of time, because the tray has an open top. (Ex. 1003, ¶ 36.) A closed container (e.g., a drainage bag) is required for a long-term catheterization solution. (Ex. 1003, ¶ 36; Ex. 1002, ¶ 385.)

Serany discloses the "*medical assembly comprises a coiled tubing coupled between a fluid drain bag and a Foley catheter*." Specifically, Serany discloses coiled tubing 49 could between a Foley catheter 48 and a drainage bottle 46: "[i]ncluded in the box 10 beneath the tray 12 are a collapsible drainage bottle 46 and a Foley catheter 48 (partly shown) connected thereto by the drainage tube 49 and ready for use." (Ex. 1006, 3:23-26; Ex. 1002, ¶¶ 386-387.)

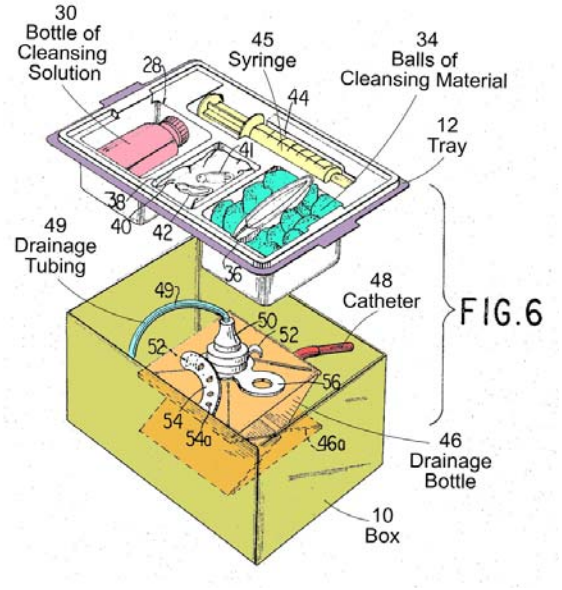

While Serany refers to catheter as being connected to a "drainage *bottle*," it describes the "bottle" as being made out of a "flexible plastic material" that can be collapsed inside the box. (Ex. 1006, 3:26-32.) A POSITA would understand Serany to therefore also teach a drainage/fluid *bag*. (Ex. 1002, ¶ 388.) To the extent Patent Owner argues that Serany does not teach a bag, it would have further been obvious to substitute the "bottle" of Serany with the "bag" of Disston. (Ex.

1002, ¶ 388.) Doing so would merely involve a simple substitution of one container (a "bottle") for another known type of container (a "bag") to produce predictable results.

Disston also discloses a "*medical assembly comprises a coiled tubing coupled between a fluid drain bag and a Foley catheter*." Specifically, Disston discloses "a pre-assembled catheter-tube-bag assembly," including a Foley catheter 7, drainage tube 8, and drainage bag 10. (Ex. 1008 at 2:15-23; Fig. 1; Ex. 1002, ¶ 385.)

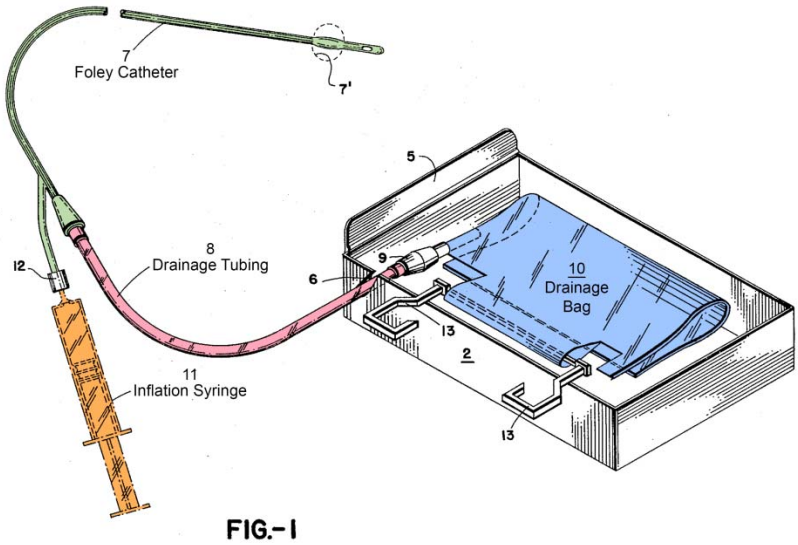

Disston is analogous art to Solazzo and Serany because all three references teach Foley catheter trays.

Thus, it was well-known in the art (by the 1960s) to provide closed-system Foley catheters in Foley catheter kits. The Nursing Standard article, which was published in March 2009, notes that providing a tray with a "closed system" catheter is a standard practice: "Catheters should be connected to a sterile catheter bag or valve, creating a closed system." (Ex. 1010, 52; Ex. 1002, ¶ 390.) According to the Nursing Standard article, " "[t]he risk of infection with an open system is 97% but this falls to between 8% and 15% when a sterile closed system is adopted." (Ex. 1010, 51.)

Serany further describes a pre-connected catheterization system and that "an object of this invention is to provide a catheterization package which reduces the rate of infection." (Ex. 1005, 1:31-32; 3:23-36). Similar, Disston discloses "the drainage system is pre-assembled" and "ready for use." (Ex. 1008, 2:72, 3:1.)

In view of Serany and Disston, a POSITA would have been motivated to include a closed-system Foley catheter (including "*a coiled tubing coupled between a fluid drain bag and a Foley catheter*") in the tray of Solazzo for multiple reasons. First, Serany and Disston teach pre-connected systems that are "ready for use." Including a pre-connected Foley system that is "ready for use" in the tray of Solazzo reduces the steps in a Foley catheterization procedure because a fluid/drainage bag does not need to be fetched and connected to the Foley catheter. (Ex. 1003, ¶ 35.) Second, it was known in the art that closed-system Foley

catheters (i.e., Foley catheters that are pre-connected to a drainage bag via tubing) reduce the risk of infection. (Ex. 1002, ¶ 349; Ex. 1003, ¶ 35; Ex. 1010, 51.)

Furthermore, placing the closed-system Foley catheter in Solazzo's tray does not eliminate the catheterization and irrigation features of the tray. The tray of Solazzo can be still be used for catheterization and irrigation procedures. (Ex. 1003, ¶ 38.) As explained by Dr. Yun, the tray can be best utilized for both purposes when a closed-system Foley catheter is provided in the tray of Solazzo. (Ex. 1003, ¶ 41-42.) For example, a practitioner may use the tray to catheterize a patient. The tray can be later used to perform an irrigation procedure, as necessary, for example if the patient is unable to urinate due to the formation of clots. (Ex. 1003, ¶ 41-42; Ex. 1002, ¶ 393.)

A POSITA would further have been motivated to combine the closed-system Foley catheter (including "*a coiled tubing coupled between a fluid drain bag and a Foley catheter*") taught by Serany and Disston with the tray of Solazzo because it involves applying a known technique (a closed-system Foley catheter) to a known device (a Foley catheter kit) ready for improvement to yield predictable results (providing a "ready for use" catheterization solution and a closed-system to reduce CAUTIs). (Ex. 1002, ¶ 394.)

Accordingly, the combination of Solazzo in view of Serany and Disston disclose this claim element.

(d) ***45[d]:*** *"at least one layer of wrap material ..."*

Claim 45[d] requires "*at least one layer of wrap material enclosing the single layer tray within one or more folds of the at least one layer of wrap material*."

Solazzo discloses an "ergonomic urological catheterization/irrigation tray kit," but does not recite how the tray is packaged. Serany discloses a Foley catheter tray with "*at least one layer of wrap material enclosing the tray within one or more folds of the at least one layer of wrap material*." Specifically, Serany discloses a Foley catheter tray that is "enclosed within a wrap 14." (Ex. 1006, 1:60-63.) Annotated Figure 2 shows the tray enclosed within one or more folds of the at least one layer of wrap material 14 in green:

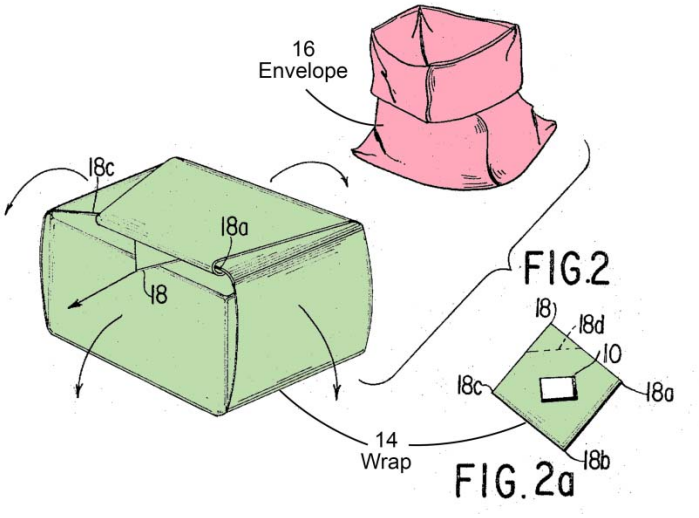

Figure 3 (annotated) of Serany shows the wrap 14 when unfolded:

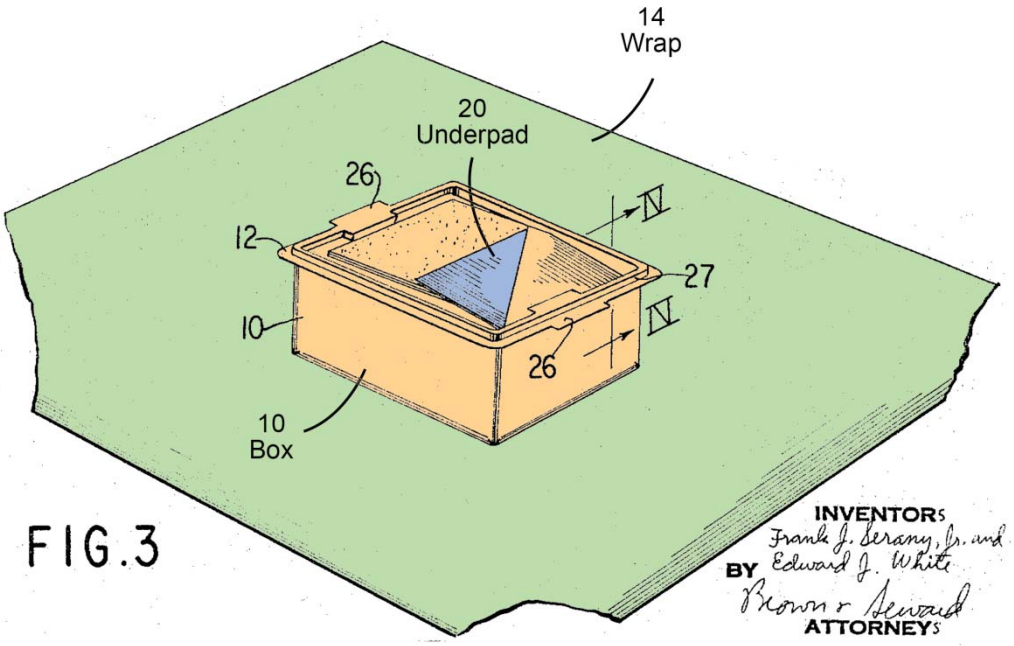

The wrap of Serany ensures that "components are maintained sterile until the package is opened." (Ex. 1006, 1:13-16.) Additionally, when the wrap 14 is unfolded about the tray, a "sterile field may be maintained as the components are removed from the package and used." (Ex. 1006, 1:13-16; 2:1-20; Ex. 1002, ¶¶ 396-399.)

A POSITA would understand that the tray of Solazzo needs to be packaged for shipping to maintain the components within the tray in their respective compartments *and* to preserve the sterility of the components provided inside the

tray. For example, Solazzo teaches sterile components such as "a Foley catheter" and "surgical gloves." (Ex. 1005, 3:15-24; Ex. 1002, ¶ 400.)

It would have been obvious to a POSITA at the time of the invention to combine the wrap taught by Serany with the catheterization tray of Solazzo. Serany and Solazzo are analogous art because they both disclose trays for holding a Foley catheter and related medical devices. The wrap of Serany and the tray of Solazzo are both well-known elements and could be combined with each other with each performing the same function as it does separately. The resulting combination would be utterly predictable. (Ex. 1002, ¶ 401.)

Furthermore, a POSITA would have been motivated to enclose the tray of Solazzo in a wrap in view of Serany. For example, Serany teachings preserve the sterility of the components both *before* the package is opened and *after* the package is opened with a wrap. Specifically, the wrap 14 (along with the envelope 16) ensures that the "components are maintained sterile until the package is opened" and the wrap 14 also serves as a "sterile field" after opening the tray. (Ex. 1006, 1:13-16; Ex. 1002, ¶ 402.)

A POSITA would further have been motivated to combine the packaging solution taught by Serany with the tray of Solazzo because it involves applying a known technique (enclosing a tray with a wrap as shown by Serany) to a known device (a Foley catheter tray as shown by Solazzo) ready for improvement to yield

predictable results (allowing the tray of Solazzo to be shipped with sterile components). (Ex. 1002, ¶ 402.)

Accordingly, the combination of Solazzo in view of Serany discloses this claim element.

(e) ***45[e]:*** *"an outer packaging ..."*

Claim 45[e] requires "*an outer packaging disposed about both the single layer tray and the at least one layer of wrap material*."

Solazzo discloses an "ergonomic urological catheterization/irrigation tray kit," but does not recite how the tray is packaged for shipping.

Serany discloses "*an outer packaging disposed about both the tray and the at least one layer of wrap material*." Specifically, Serany discloses a Foley catheter tray that is "encased within an envelope 16." (Ex. 1006, 1:60-63.)

Figure 1 (annotated below) shows the tray encased in an outer packaging 16:

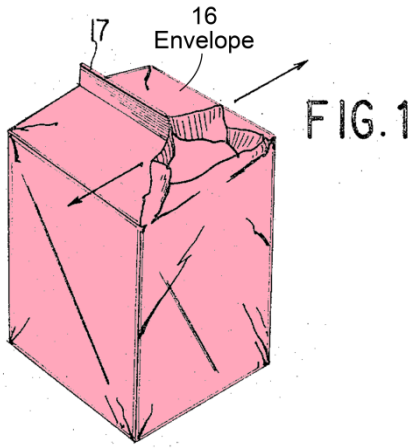

Serany teaches a packaging solution wherein "components are maintained sterile until the package is opened." (Ex. 1006, 1:13-16.) The outer packaging (envelope 16) of Serany serves this function: "The envelope 16 seals the contents to maintain the sterility of the contents, the latter, of course, having been sterilized before or after enclosure in the envelope." (Ex. 1006, 1:63-72.)

The envelope 16, which has a "heat seal 17," also may "serve as a waste receptacle" after the package is opened. (Ex. 1006, 1:63-72.) Figure 2 (annotated below) shows the envelope 16 after the Serany kit has been opened. (Ex. 1002, ¶¶ 404-408.)

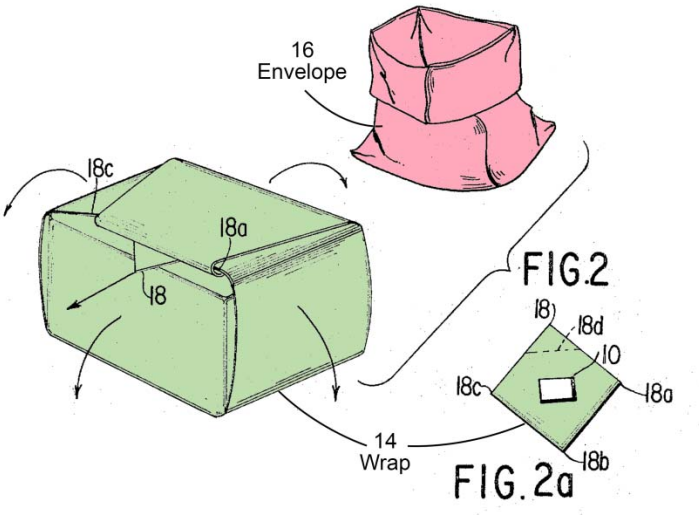

It would have been obvious to a POSITA at the time of the invention to combine the outer packaging taught by Serany with the catheterization tray of Solazzo. Serany and Solazzo are analogous art because they both disclose trays for holding a Foley catheter and related medical devices. The outer packaging of

Serany and the tray of Solazzo are both well-known elements and could be combined with each other with each performing the same function as it does separately. The resulting combination would be utterly predictable. (Ex. 1002, ¶ 409.)

Furthermore, it would have been obvious to a POSITA at the time of the invention to combine the outer packaging taught by Serany with the catheterization tray of Solazzo. A POSITA would understand that the tray of Solazzo needs to be packaged for shipping to maintain the components within the tray in their respective compartments *and* to preserve the sterility of the components provided inside the tray. (Ex. 1002, ¶ 410.)

In view of Serany, a POSITA would have been motivated to seal the tray of Solazzo in an outer packaging such that the "components are maintained sterile until the package is opened." (Ex. 1006, 1:13-16; Ex. 1002, ¶ 411.)

A POSITA would further have been motivated to combine the packaging solution taught by Serany with the tray of Solazzo because it involves applying a known technique (sealing a tray with an outer packaging as taught by Serany) to a known device (a tray for holding a Foley catheter as taught by Solazzo) ready for improvement to yield predictable results (maintaining the sterility of the components of the tray until the package is opened). (Ex. 1002, ¶ 412.)

Accordingly, the combination of Solazzo in view of Serany discloses this claim element. Thus, Solazzo in view of Serany and Disston renders claim 45 obvious.

2) Claims 46, 62, 78

For the reasons set forth in claim 45[b], Solazzo discloses "*wherein one of the first syringe or the second syringe contains lubricating jelly.*"

Solazzo's kit also includes "a tube of lubricant fluid 140" disposed in compartment 3 of the tray. (Ex. 1005, 4:41-46; Fig. 8) It would have further been obvious to a POSITA at the time of the invention to provide a *syringe* of lubricant fluid in place of the *tube* of lubricant fluid. Doing so would merely involve a simple substitution of one container (a tube) for another known type of container (a syringe) also disclosed by Solazzo to produce predictable results. (Ex. 1002, ¶ 417.) Indeed, the Board has found such a substitution to be obvious. (*See* IPR2015-00513, 13 ("On the current record, we agree with Petitioner that "[s]ubstituting one container for another type of container (*e.g.*, substituting a lubricant in a 'packet' with a lubricant in a syringe) would have been an obvious substitution of components known to be suitable to yield predictable results.").)

Providing lubricant in a syringe as part of a Foley catheter kit was also well-known in the art. For example, the Nursing Standard article discloses an "all-in-one Foley tray" with a "syringe of urethral lubricant." (Ex. 1010 at 52.) The *Male*

Catheter Insertion video also shows a syringe provided inside a Foley catheter tray that is filled with lubricant. (Ex. 1015.) The substitution of a lubricant syringe for a lubrication tube would have been predictable. (Ex. 1002, ¶ 418.)

A POSITA would further have been motivated in view of the teachings of the prior art to switch from a tube of lubricant to a syringe of lubricant because dispensing lubricant of the syringe may require less effort or offer more control than a tube. (Ex. 1002, ¶ 419.) Further, a lubricant syringe (unlike a tube) has a tapered tip that allows for injection of lubricant directly into a male patient's urethra (a favored approach of urologists to avoid wasting lubricant). (Ex. 1003, ¶ 22.) Thus, a known technique (injecting lubricant directly into a patient's urethra using a lubricant syringe) is applied to improve a known device (a Foley catheter tray) to yield predictable results.

Accordingly, Solazzo discloses this claim element. Thus, Solazzo in view of Serany and Disston renders claims 46, 62, and 78 obvious.

3) Claims 47, 63, 79

Solazzo discloses "*wherein another of the first syringe or the second syringe contains water*."

Specifically, Solazzo discloses: "[t]he kit includes: ... (e.) an inflation syringe for inflation of a catheter with fluid." (Ex. 1005, 1:15-21). Solazzo further details "the catheter being lubricated, inserted and then inflated with fluid using the

syringe." (Ex. 1005, 4:43-58.) In the background section, Solazzo describes a tray that includes "a syringe prefilled with bacteriostatic water." (Ex. 1005, 1:38-42.) Thus, a POSITA would understand Solazzo to disclose an inflation syringe that includes sterile water. (Ex. 1002, ¶ 422.)

Serany also discloses an inflation syringe including "sterile water": "the catheter is inflated with the sterile water in the syringe 45." (Ex. 1006, 3:50-51; (Ex. 1002, ¶ 423.)

Accordingly, Solazzo discloses this claim element. Furthermore, the combination of Solazzo in view of Serany discloses this claim element. Thus, Solazzo in view of Serany and Disston render claims 47, 63, and 79 obvious.

4) Claims 48, 64, 80

For the reasons set forth in claims 47, 63, 79, Solazzo discloses "*wherein the water is sterile*."

Accordingly, Solazzo discloses this claim element. Thus, Solazzo in view of Serany and Disston renders claims 48, 64, and 80 obvious.

5) Claims 50, 66, 82

Solazzo discloses "*the single layer tray comprising a lubricating jelly application compartment*."

Specifically, Solazzo discloses a tray that includes "Foley catheter lubricating wells 31 and 33: "Optional Foley catheter lubricating wells 31 and 33

are available for right handed and left handed users so that lubricating material could be applied to the catheter or other insertion device by filling the well with lubricant and then sliding the device through the lubricant in the well." (Ex. 1005, 4:21-25; Figs. 1 & 3.)

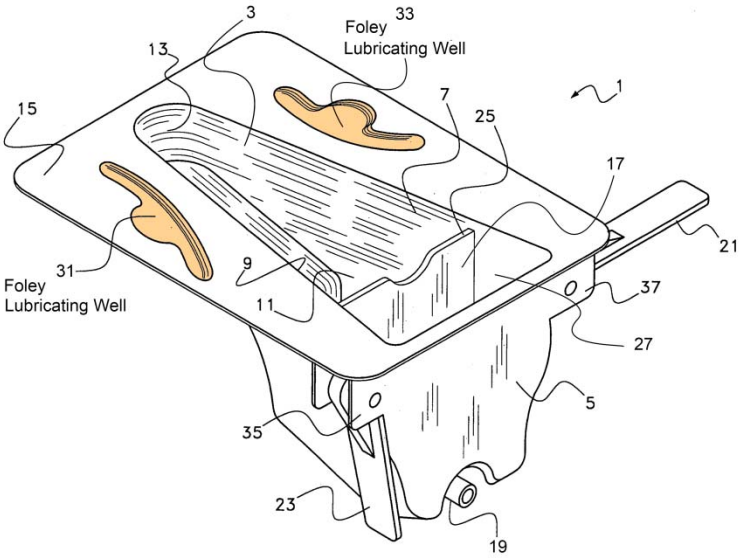

Fig. 1

The Foley catheter lubricating wells are "*a lubricating jelly application compartment*." As noted above, the Solazzo patent uses the terms "compartment" and "well" interchangeably. (Ex. 1005, claim 3.) The lubricant is applied in the wells via the "*tube* of lubricant 140," which is replaceable with a *syringe* of lubricant, as set forth at claim 46, 62, and 78. The Foley catheter is then run through the dispensed lubricant in the compartment/well. (Ex. 1005, 4:21-25; Ex. 1002, ¶¶ 427-430.)

Accordingly, Solazzo discloses this element. Thus, Solazzo in view of Serany and Disston renders claims 50, 66, and 82 obvious.

6) Claims 51, 67, 83

For the reasons set forth at claims 50, 66, 82, Solazzo discloses "*the lubricating jelly application compartment to receive lubricating jelly from one of the first syringe or the second syringe to lubricate at least some of the Foley catheter*."

Thus, Solazzo in view of Serany and Disston renders claims 51, 67, and 83 obvious.

7) Claims 55, 71, 87

Claims 55, 71, and 87 require "*further comprising a Foley catheter securement device disposed within the single layer tray*."

Serany discloses "*a Foley catheter securement device disposed within the single layer tray*." Specifically, Serany discloses a tray that includes a "safety pin 41" and "rubber band 42" that are "ready for use" and serve as a catheter securement device. (Ex. 1006, 3:1-5) The safety pin and rubber band are used to attach the included drainage tubing to a bed sheet: "[t]he drainage tubing 49 is attached to a bed sheet with the safety pin 41 and rubber band 42 to thereby complete the catheterization procedure." (Ex. 1006, 3:55-58.) The safety pin and rubber band serve as a Foley catheter securement device because the indwelling

Foley catheter 48 and drainage tubing 49 are a pre-connected system. (Ex. 1006, 3:23-26.) Thus, securing the drainage tubing also secures the attached Foley catheter. (Ex. 1002, ¶ 434.)

In view of Serany, a POSITA would have been motivated to include a Foley catheter securement device in the catheterization kit of Solazzo to allow for the Foley catheter to be properly secured when inserted. Serany further provides motivation by describing a securement device that is "ready for use," such that the practitioner does not need to turn to external items for securement. (Ex. 1002, ¶ 435.)

Furthermore, the inclusion of a Foley catheter securement device in the catheterization kit of Solazzo involves the use of a known technique (application of a securement device during a catheterization procedure) to a known device (a Foley catheter kit) ready for improvement to yield predictable results (providing a securement device in the tray so that the practitioner can secure the catheter after it inserted in the patient). (Ex. 1002, ¶ 436.)

Accordingly, the combination of Solazzo in view of Serany discloses this element. Thus, Solazzo in view of Serany and Disston renders claims 55, 71, and 87 obvious.

8) Claims 56, 72, 88

Claims 56, 72, and 88 require "*further comprising an underbuttocks drape disposed within the outer packaging*."

Serany discloses "*further comprising an underbuttocks drape disposed within the outer packaging*." Specifically, Serany discloses an underpad: "Upon removal of the wrap 14, there is exposed a waterproof underpad 20 which is folded flat and rests on top of the tray 12. The underpad 20, which may be made of paper with a plastic water-proof coating on one side, is adapted to be placed under the patent. … all the above being accomplished while maintaining a sterile field." (Ex. 1006, 2:21-33.)

In view of Serany, a POSITA would have been motivated to include a underbuttocks drape – a common device used in a catheterization procedure – in the catheterization kit of Solazzo. Serany provides motivation for including an underbuttocks drape by noting that the drape allows for the maintenance of a "sterile field." (Ex. 1006, 2:21-33; (Ex. 1002, ¶¶ 439-440.)

Furthermore, the inclusion of a underbuttocks drape in the catheterization kit of Solazzo involves the use of a known technique (application of an underbuttocks drape during a catheterization procedure) to a known device (a Foley catheter kit) ready for improvement to yield predictable results (providing a under buttocks

drape in the tray so that the practitioner can create a sterile field under the patient). (Ex. 1002, ¶ 441.)

Accordingly, the combination of Solazzo in view of Serany discloses this element. Thus, Solazzo in view of Serany and Disston renders claims 56, 72, and 88 obvious.

9) Claims 57, 73, 89

Solazzo discloses "*gloves disposed within the outer packaging*." Specifically, Serany discloses a Foley catheter "kit [that] includes … .. (d.) surgical gloves." (Ex. 1005, 3:15-19; Fig. 8.)

Accordingly, Solazzo discloses this element. Thus, Solazzo in view of Serany and Disston renders claims 57, 73, and 89 obvious.

10) Claims 58, 74, 90

Serany discloses "*hand sanitizer disposed within the outer packaging*." Specifically, Serany discloses a Foley catheter "kit [that] includes … .. (h.) antiseptic solutions." (Ex. 1005, 3:15-24) An antiseptic solution is a hand sanitizer.

Solazzo's disclosure is perfectly consistent with the state of the art. It was well-known to provide a hand sanitizer in a catheterization tray to allow nurses to sterilize their hands before donning sterile gloves. The Nursing Standard article states: "[h]ands should be decontaminated before carrying out the procedure and

cleaned with alcohol gel before putting on sterile gloves." (Ex. 1010, 52.) Solazzo discloses an "antiseptic solution" that would serve as a hand sanitizer. (Ex. 1005, 3:24.) Similarly, Franks-Farah teaches an "alcohol gel (i.e., a waterless cleaner)." (Ex. 1005, 3:41-42; Ex. 1002, ¶ 446.)

Accordingly, Solazzo discloses this element. Thus, Solazzo in view of Serany and Disston renders claims 58, 74, and 90 obvious.

11) Claims 60, 76, 92

Claims 60, 76, and 92 require "*a fenestrated drape disposed within the outer packaging*."

Serany discloses a "fenestrated drape disposed within the outer packaging." Specifically, Serany states: "[a] fenestrated drape 24 folded flat underneath the gloves, is removed, unfolded, and placed in position on the patient, all the above being accomplished while maintaining a sterile field." (Ex. 1006, 2:30-33; Fig. 5.) Similarly, the Nursing Standard article recites a "sterile field/patient protection fenestrated drape." (Ex. 1010, 52.)

In view of Serany, a POSITA would have been motivated to include a fenestrated drape – a common device used in a catheterization procedure – in the catheterization kit of Solazzo. Serany provides motivation for including a fenestrated drape by noting that the drape allows for the maintenance of a "sterile field." Further, a POSITA would have been motivated to include a fenestrated

drape for "patient protection" (e.g., to prevent a mess on the patient's legs or for privacy). (Ex. 1002, ¶ 450.)

Furthermore, the inclusion of a fenestrated drape in the catheterization kit of Solazzo involves the use of a known technique (application of a fenestrated drape during a catheterization procedure) to a known device (a Foley catheter kit) ready for improvement to yield predictable results (providing a fenestrated drape in a tray so that the practitioner can create a sterile field around the patient). (Ex. 1002, ¶ 451.)

Accordingly, the combination of Solazzo in view of Serany discloses this element. Thus, Solazzo in view of Serany and Disston renders claims 60, 76, and 92 obvious.

12) Claim 61

(a) ***Preamble and 61[a]:*** *"A medical procedure kit ..."*

Solazzo discloses "*[a] medical procedure kit, comprising: a surface defining a single layer tray having a first compartment separated by a barrier from a second compartment, the second compartment configured for receiving a medical assembly comprising a Foley catheter, a coiled tubing, and a fluid drain bag*."

Solazzo discloses "*a surface defining a single layer tray having a first compartment separated by a barrier from a second compartment*." Specifically, the tray of Solazzo has a surface defining a single layer tray includes a barrier

("divider wall 17") to create "two separate compartments." (Ex. 1005, 2:61-63.) The barrier 17 separates a first compartment 27 from a second compartment 3. (Ex. 1005, Fig. 1.)

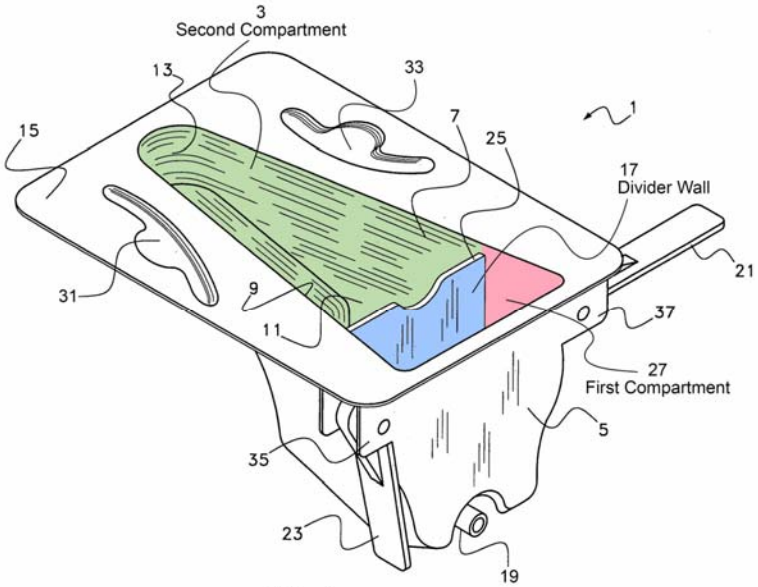

Fig. 1

For the reasons set forth in claims 45[a] and 45[c], Solazzo further discloses "*the second compartment configured for receiving a medical assembly comprising a Foley catheter, a coiled tubing, and a fluid drain bag*."

Accordingly, Solazzo discloses this claim element.

(b) ***61[b]:*** *"a first syringe and a second syringe ..."*

For the reasons set forth in claim 45[b], Solazzo discloses "*a first syringe and a second syringe disposed within the first compartment.*"

(c) ***61[c]:*** *"... medical assembly disposed in the second compartment ..."*

For the same reasons set forth in claim 45[c], Solazzo discloses "*the medical assembly disposed in the second compartment.*"

(d) ***61[d]:*** *"at least one layer of wrap material..."*

For the reasons set forth in claim 45[d], the combination of Solazzo in view of Serany discloses "*at least one layer of wrap material enclosing the single layer tray within one or more folds of the at least one layer of wrap material.*"

(e) ***61[e]:*** *"an outer packaging..."*

For the reasons set forth in claim 45[e], the combination of Solazzo in view of Serany discloses "*an outer packaging disposed about both the single layer tray and the at least one layer of wrap material.*"

13) Claim 77

(a) ***Preamble and 77[a]:*** *"A medical procedure kit ..."*

For the reasons set forth in claims 61[a], Solazzo discloses "*[a] medical procedure kit, comprising: a single layer tray having a first compartment separated by a barrier from a second compartment configured for receiving a medical assembly.*"

(b) ***77[b]:*** *"a first syringe and a second syringe ..."*

For the reasons set forth in claim 45[b], Solazzo discloses "*a first syringe and a second syringe disposed within the first compartment.*"

(c) ***77[c]:*** *"... medical assembly disposed in the second compartment ..."*

For the reasons set forth in claim 45[c], the combination of Solazzo in view of Serany and/or Disston discloses "*the medical assembly disposed in the second compartment, the medical assembly consisting essentially of a Foley catheter coupled to a coiled tubing, wherein the coiled tubing is coupled to a fluid drain bag*."

(d) ***77[d]:*** *"at least one layer of wrap material..."*

For the reasons set forth in claim 45[d], the combination of Solazzo in view of Serany discloses "*at least one layer of wrap material enclosing the single layer tray within one or more folds of the at least one layer of wrap material.*"

(e) ***77[e]:*** *"an outer packaging..."*

For the reasons set forth in claim 45[e], the combination of Solazzo in view of Serany discloses "*an outer packaging disposed about both the single layer tray and the at least one layer of wrap material*."

B. Ground 2 – Obvious Based on Solazzo, Serany, Disston, and Salvadori

1. Summary of Salvadori

Salvadori was filed on September 30, 1996, and issued on August 3, 1999. Salvadori is therefore prior art to the '088 patent pursuant to at least 35 U.S.C. § 102(b).

Salvadori is directed to a multi-pocket sterile wrapping that when unrolled "presents components to be used in the procedure in their exact order of use" for a urethral catheterization procedure. (Ex. 1009, Abstract, 1:25-31, 1:44-49; Fig. 1.) The linearly-arranged pockets are sized for holding various contents, including an underpad 52, gloves 54-56, fenestrated drape 58, swab sticks 60, catheter 62, lubricating gel 64, collection bag 66, specimen bottle 68 as shown in annotated Figure 1 below. (Ex. 1009, 1:44-49, 2:66-3:8.) When rolled, the wrapping 12 is placed in "a paper wrapper and/or sealed plastic bag, for shipment and storage." (Ex. 1009, 1:57-59; Ex. 1002, ¶ 145.)

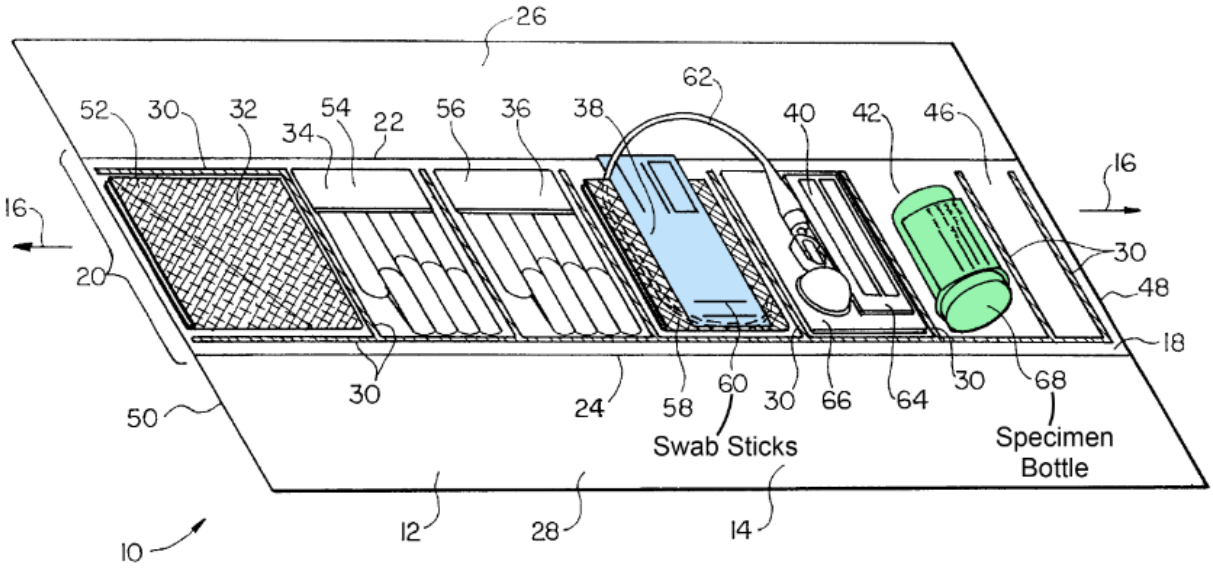

FIG. 1

2. The Combination

As set forth below, Solazzo in view of Serany, Disston, and Salvadori discloses all the elements in the claims in this ground and renders those claims as obvious.

1) Claims 49, 65, 81

Claims 49, 65, and 81 require "*further comprising a specimen jar disposed within the single layer tray.*"

Salvadori discloses "*a specimen jar disposed within the single layer tray*." Specifically, Salvadori discloses a "urethral catheter kit or tray" with "a specimen bottle 68." (Ex. 1009, 1:12-16; 3:8.)

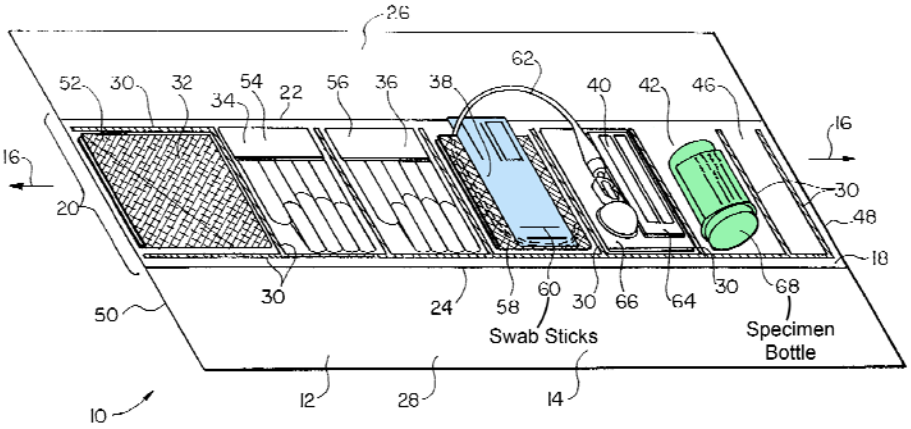

FIG. 1

Specimen jars were common in prior art catheter trays (as in Salvadori, Beddow, and Rauschenberger). (Ex. 1013, 1:11; Ex. 1014, 1:21-25.) They are

used to take a specimen of urine from a patient if there is a clinical need, as taught by the Nursing Standard article: "If there is a clinical need to take a catheter specimen of urine, this should be taken from a sampling port using an aseptic technique." (Ex. 1010, 51; (Ex. 1002, ¶ 468.)

In view of Salvadori, a POSITA would have been motivated to include a specimen jar – a common device used with a catheterized patient– in the catheterization kit of Solazzo to allow a practitioner to take a urine sample when the clinical need arises. (Ex. 1002, ¶ 469.)

Furthermore, the inclusion of a urine specimen jar in the catheterization kit of Solazzo involves the use of a known technique (provision of a specimen jar) to a known device (a Foley catheter kit) ready for improvement to yield predictable results (providing a specimen jar so that the practitioner can take a urine specimen when the patient is catheterized with the Foley catheter disclosed by Solazzo). (Ex. 1002, ¶ 470.)

Accordingly, the combination of Solazzo in view of Salvadori discloses this element. Solazzo in view of Serany, Serany, Disston, and Salvadori therefore renders claims 49, 65, and 81 obvious.

2) Claims 54, 70, 86

Claims 54, 70, and 86 require "*further comprising one or more swabsticks disposed within the single layer tray*."

Salvadori discloses "*one or more swabsticks disposed within the single layer tray*." Specifically. Salvadori teaches a "urethral catheter kit or tray" that includes "swab sticks 60." (Ex. 1009, 1:12-16; 3:4.)

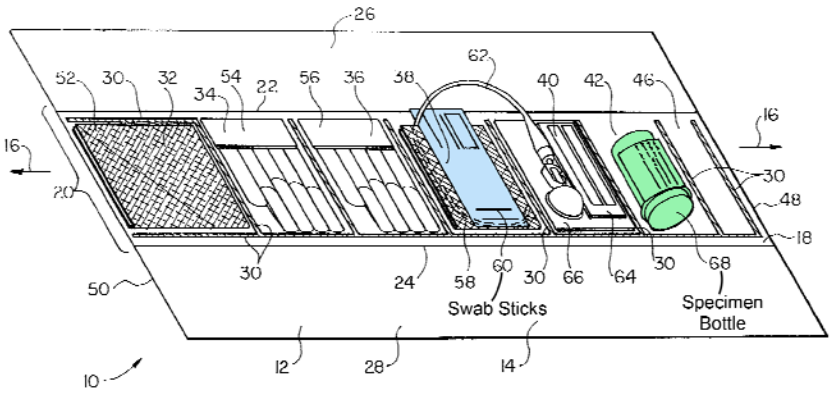

FIG. 1

Trays with swabs for cleaning a patient were common in the prior art. For example, the Nursing Standard article also describes an "all-in-one Foley tray" with "five gauze swabs," and describes a procedure using the all-in-one tray where the swabs are used to cleanse the patient's genitals prior to insertion of the catheter. (Ex. 1010, 52.) Similarly, Serany teaches "balls 34 of cleansing material" that provide the exact same function as swabsticks, i.e., they are used to cleanse the patient prior to insertion of the catheter. (Ex. 1006, 2:57-65; (Ex. 1002, ¶ 474.)

In view of Salvadori, a POSITA would have been motivated to include swabsticks – a common device used with a catheterized patient– in the catheterization kit of Solazzo to allow a practitioner to cleanse the patient's genitals prior to insertion of the catheter. (Ex. 1002, ¶ 475.)

Furthermore, the inclusion of a swabsticks in the catheterization kit of Solazzo involves the use of a known technique (provision of swab sticks) to a known device (a Foley catheter kit) ready for improvement to yield predictable results (providing swab sticks to allow the practitioner to clean the patient before insertion of the Foley catheter). (Ex. 1002, ¶ 476.)

Accordingly, the combination of Solazzo in view of Salvadori discloses this element. Solazzo in view of Serany, Serany, Disston, and Salvadori therefore renders claims 54, 70, and 86 obvious.

C. Ground 3- Obvious Based on Solazzo, Serany, Disston, and Franks-Farah

1. Summary of Franks-Farah

Franks-Farah was filed on September 11, 2003, and issued on January 11, 2005. Franks-Farah is therefore prior art to the ’088 patent pursuant to at least 35 U.S.C. § 102(b).

Franks-Farah is directed to a urinary catheterization kit tray that contains various devices for performing catheterization, such as a catheter, antibacterial soap, lubricant, and step-by-step instructions. (Ex. 1007, 2:5-14; Figs. 1-1A.) The tray “includes extremely detailed and specific step-by-step instructions 34 as illustrated in FIGS. 2A and 2B that the user uses with the intermittent catheterization system 1.” (Ex. 1007, 4:13-17; Figs. 2A-2B; Ex. 1002, ¶¶ 146-150.)

2. The Combination

As set forth below, Solazzo in view of Serany, Disston, and Franks-Farah discloses all the elements of the claims in this ground and renders those claims as obvious.

1) Claims 52, 68, 84

Claims 52, 68, and 84 require "*further comprising printed instructions for using the single layer tray.*"

Adding printed matter (such as "*printed instructions for using the tray*") to a known kit is not a patentable distinction over the prior art because claim elements directed to printed matter generally do not have patentable weight. Because these claims do not add anything to the claims from which they respectively depend besides the recitation of printed instructions, claims 52, 68, and 84 are invalid. To the extent this claim is found to have patentable weight, claim 52, 68, and 84 would have been obvious for the reasons provided below.

Solazzo discloses a catheterization/irrigation kit including components that are used to perform a catheterization procedure, but does not expressly recite a tray that includes printed instructions.

Franks-Farah discloses "*printed instructions for using the tray*." Franks-Farah is analogous art to Solazzo because both references are directed to a catheterization kit.

Franks-Farah teaches a urinary catheter kit that includes common devices for performing a catheterization procedure, including printed instructions. In particular, the kit "includes extremely detailed and specific step-by-step instructions 34 as illustrated in FIGS. 2A and 2B that the user uses with the intermittent catheterization system 1." (Ex. 1007, 4:12-16.) Figure 2(A) is provided below:

FIG. 2A

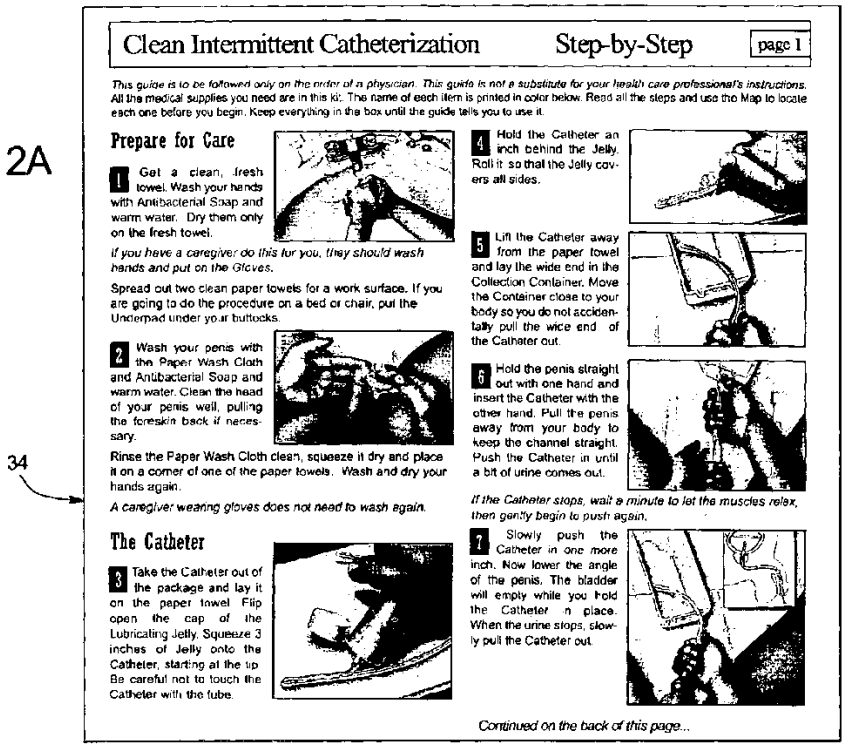

Clean Intermittent Catheterization Step-by-Step page 1

This guide is to be followed only on the order of a physician. This guide is not a substitute for your health care professional's instructions. All the medical supplies you need are in this kit. The name of each item is printed in color below. Read all the steps and use the Map to locate each one before you begin. Keep everything in the box until the guide tells you to use it.

Prepare for Care

1 Get a clean, fresh towel. Wash your hands with Antibacterial Soap and warm water. Dry them only on the fresh towel.

If you have a caregiver do this for you, they should wash hands and put on the Gloves.

Spread out two clean paper towels for a work surface. If you are going to do the procedure on a bed or chair, put the Underpad under your buttocks.

2 Wash your penis with the Paper Wash Cloth and Antibacterial Soap and warm water. Clean the head of your penis well, pulling the foreskin back if necessary.

Rinse the Paper Wash Cloth clean, squeeze it dry and place it on a corner of one of the paper towels. Wash and dry your hands again.

A caregiver wearing gloves does not need to wash again.

34

The Catheter

3 Take the Catheter out of the package and lay it on the paper towel. Flip open the cap of the Lubricating Jelly. Squeeze 3 inches of Jelly onto the Catheter, starting at the tip. Be careful not to touch the Catheter with the tube.

4 Hold the Catheter an inch behind the Jelly. Roll it so that the Jelly covers all sides.

5 Lift the Catheter away from the paper towel and lay the wide end in the Collection Container. Move the Container close to your body so you do not accidentally pull the wide end of the Catheter out.

6 Hold the penis straight out with one hand and insert the Catheter with the other hand. Pull the penis away from your body to keep the channel straight. Push the Catheter in until a bit of urine comes out.

If the Catheter stops, wait a minute to let the muscles relax, then gently begin to push again.

7 Slowly push the Catheter in one more inch. Now lower the angle of the penis. The bladder will empty while you hold the Catheter in place. When the urine stops, slowly pull the Catheter out.

Continued on the back of this page...

In view of Franks-Farah, a POSITA would have been motivated to include printed instructions in the tray of Solazzo. (Ex. 1002, ¶ 483.) Franks-Farah provides motivation because it provides "extremely detailed and specific step-by-step instructions" to help ensure that physicians perform a catheterization or

irrigation procedure using the proper technique. Further, FDA rules in 2009 required medical devices to include "adequate directions for use" such that "the layman can use a device safely and for the purposes for which it is intended." 21 CFR § 801.5 (4-1-09 Edition).

A POSITA would have been motivated to include printed instructions in the tray of Solazzo because doing so involves applying a known technique (inclusion of printed instructions as taught by Franks-Farah) to a known device (a catheter kit as taught by Solazzo and Serany) ready for improvement to yield predictable results (allowing physicians to inform themselves regarding how to perform a catheterization or irrigation procedure using the tray of Solazzo). (Ex. 1002, ¶ 484.)

Accordingly, the combination of Solazzo in view of Franks-Farah discloses this claim element. Solazzo in view of Serany and Franks-Farah therefore renders claims 52, 68, and 84 obvious.

2) Claims 53, 69, 85

Claims 53, 69, and 85 require, "*the printed instructions to instruct application of lubricating jelly to the Foley catheter using a lubricating jelly application compartment of the single layer tray*."

Again, adding printed matter (such as "*printed instructions to instruct application of lubricating jelly to the catheter assembly using the lubricating jelly*

application chamber") to a known kit is not a patentable distinction over the prior art because claim elements directed to printed matter generally do not have patentable weight. Because these claims do not add anything to the claims from which they respectively depend besides the recitation of printed instructions, claims 53, 69, and 89 are invalid. To the extent this claim is found to have patentable weight, claims 53, 69, and 89 would have been obvious for the reasons provided below.

For the reasons set forth in claims 50, 66, 82, Solazzo discloses "*application of lubricating jelly to the Foley catheter using a lubricating jelly application compartment of the single layer tray*."

For the reasons set forth in claims 52, 68, and 84, Solazzo in combination with Serany and Franks-Farah discloses "*printed instructions for using the tray*." Step 3 of Figure 2(a) of Franks-Farah (provided below) includes a step that teaches lubricating the catheter:

The Catheter

3 Take the Catheter out of the package and lay it on the paper towel. Flip open the cap of the Lubricating Jelly. Squeeze 3 inches of Jelly onto the Catheter, starting at the tip. Be careful not to touch the Catheter with the tube.

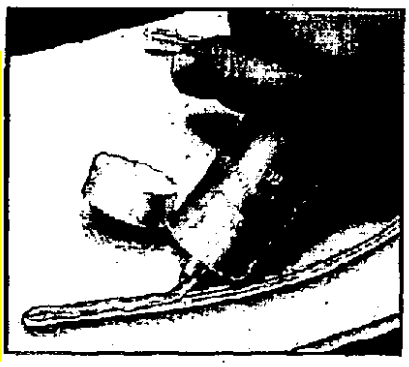

In view of Franks-Farah, a POSITA would have been motivated to include printed instructions in the tray of Solazzo that includes instructions regarding how to lubricate the catheter using the tray of Solazzo. A POSITA would have specifically been motivated to "*instruct application of lubricating jelly to the catheter assembly using the lubricating jelly application chamber*" because compartments of the tray, including the first compartment 3/27 in the "no divider wall" embodiment described in claim 1[f], function as a lubricating jelly application chamber. (Ex. 1002, ¶ 491.)

A POSITA would further have been motivated to includes printed instruction in the tray of Solazzo because it involve applying a known technique (inclusion of printed instructions with specific instructions regarding a lubrication step of a catheterization procedure as taught by Franks-Farah) to a known device (a catheter kit as taught by Solazzo and Serany) ready for improvement to yield predictable results (allowing physicians to inform themselves regarding how to perform a catheterization or irrigation procedure using the tray of Solazzo). (Ex. 1002, ¶ 492.)

Accordingly, the combination of Solazzo in view of Serany and Franks-Farah discloses this claim element. Solazzo in view of Serany and Franks-Farah therefore renders claim 53, 69, and 85 obvious.

D. Ground 4- Obvious Based on Solazzo, Serany, Disston, and Nursing Standard article

1. Summary of Bierman

Bierman was filed on August 31, 2006, and published on October 9, 2008. Bierman is therefore prior art to the ’088 Patent pursuant to at least 35 U.S.C. § 102(a) and (e).

Bierman is directed to a Foley catheter securement device having an anchor pad 12 that secures a Foley catheter 8 in a retainer 20 to a patient’s leg via adhesive surface 16. (Ex. 1020, ¶ 0047; Figs. 1, 9.)

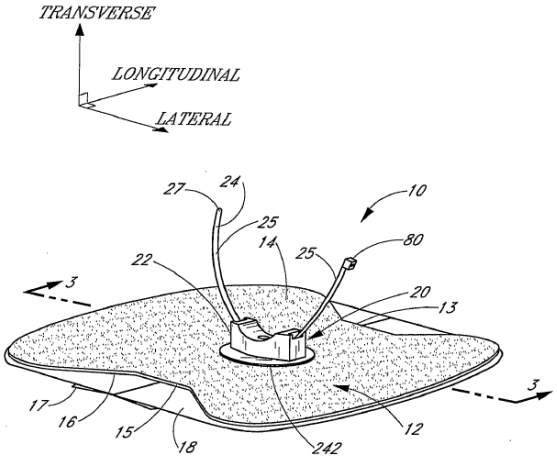

FIG. 1

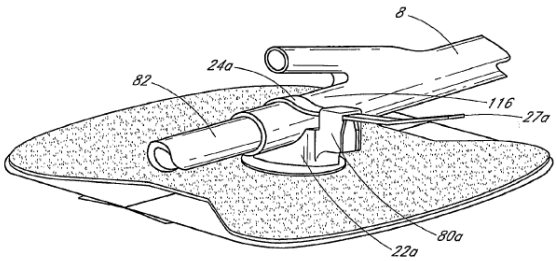

FIG. 9

Bierman explains that anchoring is important to inhibit disconnection between the catheter and drainage tube, prevent the catheter or drainage tube from snagging on the bed rail, and inhibit movement of the medical article relative to the patient. (Ex. 1020, ¶¶ 0008, 0002.) However, past solutions (e.g., tape) would

become non-adherent to the catheter, require periodic tape changes to inhibit germ growth, were difficult and cumbersome, and subjected the healthcare provider to possible infection. (Ex. 1020, ¶ 0009.) Bierman's Foley catheter securement device eliminates use of tape and suturing, enhances patient comfort, decreases application time, and can be used with any of a wide variety of catheters, tubes, and other medical articles. (Ex. 1020, ¶ 0137; Ex. 1002, ¶¶ 151-155.)

2. The Combination

Bard is separately presenting claims 55, 71, and 87 in this ground from Ground 1. As set forth below, Solazzo, Serany, Disston, and Bierman disclose discloses all the elements in the claims in this ground and renders those claims as obvious.

3. Claims 55, 71, 87

Claims 55, 71, and 87 require "*further comprising a Foley catheter securement device disposed within the single layer tray.*"

Solazzo discloses a Foley catheter disposed within a single level tray. Bierman discloses "*a Foley catheter securement device.*" Specifically, Figure 9 shows a Foley catheter 9 connected to a Foley catheter securement device that attaches to a patient's thigh. (Ex. 1020, ¶¶ [0023], [0043], [0046.])

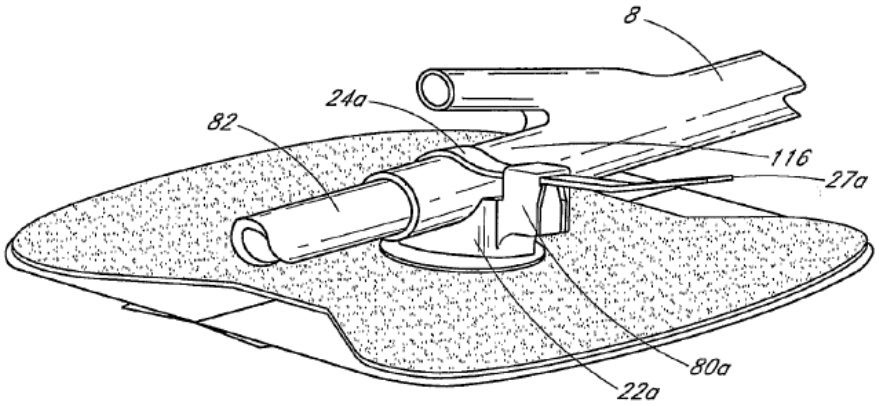

FIG. 9

Bierman notes that tape is often used to secure a catheter to the inner thigh of a patient to prevent the catheter from being disconnected to the drainage tube and to prevent snagging. (Ex. 1010, ¶ 0009.) But tape has disadvantages when used as a securement device, such as "germ growth" and becoming "non-adherent." (Ex. 1010, ¶ 0009.) Bierman describes an improved Foley catheter securement device in the form of an anchoring pad that secures a Foley catheter to a patient's thigh via an adhesive material. (Ex. 1010, ¶ 0010-12; Figs. 9 and 10.)

Foley catheter securement devices (such as the device taught by Bierman) were widely available in Foley catheter kits by 2009, as taught by the Nursing Standard article. (Ex. 1010, 52.) In particular, the Nursing Standard article teaches an "all-in-one Foley tray" with a "Foley catheter stabilization device," i.e., a Foley catheter securement device. (Ex. 1010, 52.) The Nursing Standard article explains the need to secure a Foley catheter: "If the catheter is not secured

properly, or if irritation causes the patient to pull on the device itself or the connecting tube, the catheter may migrate from its intended point of fixation," which can lead to "movement-induced trauma" and "infection." (Ex. 1010, 54.)

In view of Bierman, a POSITA would have been motivated to include a Foley catheter securement device – a common device used with a catheterized patient – in the catheterization kit of Solazzo to allow a practitioner to secure the Foley catheter to the patient's thigh to prevent the catheter from being disconnected or snagging. A Foley catheter securement device also helps to prevent "movement-induced trauma" and "infection." (Ex. 1002, ¶¶ 495-498.)

Furthermore, the inclusion of a Foley catheter securement device in the catheterization kit of Solazzo involves the use of a known technique (application of a securement device during a catheterization procedure) to a known device (a Foley catheter kit) ready for improvement to yield predictable results (providing reliable means to secure the catheter to the patient's thigh to prevent the catheter being disconnected from the drainage tubing). (Ex. 1002, ¶ 499.)

Accordingly, the combination of Solazzo in view of Bierman discloses this element. Solazzo in view of Serany, Serany, Disston, and Bierman therefore renders claims 55, 71, and 87 obvious.

VIII. SECONDARY CONSIDERATIONS

While secondary considerations of non-obviousness must be taken into account when present, Patent Owner offered no such evidence during the prosecution of the ’088 patent. To the extent Medline raises alleged evidence of non-obviousness in response to Bard’s Petition, Bard should be afforded the opportunity to respond.

IX. SECTION 325(d) IS INAPPLICABLE

Neither the original examination of the ’088 patent (or other Medline patents), nor the *inter partes* reviews in *Medline I* raised substantially the same art or arguments as the current Petition. Thus, § 325(d) is inapplicable to this proceeding. *See Becton, Dickinson and Company v. B. Braun Melsungen AG*, IPR2017-01586, Paper 8 at 17-18 (PTAB Dec. 15, 2017).

A. Original Examination

The primary reference in this Petition—Solazzo—is materially different and not cumulative of the art discussed in the Examiner’s Notice of Allowability. With respect to claims 45, 61 and 77, the closest art (Paikoff) lacked a Foley catheter, coiled tubing and fluid drain bag.

Solazzo with Serany and Disston have all these features as discussed above. Moreover, Solazzo was included in an IDS listing of 375 references or so. While it was considered along with the hundreds of other references, the Examiner never

mentioned Solazzo in the entire examination, including in the Notice of Allowability. Indeed, none of the art referenced in the grounds of this Petition was discussed by the Examiner during the original examination. Thus, no factor in *Becton* favors application of § 325(d).

B. Original Examination Of U.S. Patent No. 9,795,761

The ’088 patent is part of a complex patent portfolio. (Ex. 1017.) In application no. 13/153,265, now U.S. Patent No. 9,795,761, the Examiner identified the published application of Solazzo (Ex. 1018; “Solazzo Publication”) as one of the closest prior art in the Notice of Allowability (Ex. 1019). (He had not raised it before.) The Examiner noted that the Solazzo Publication discloses a Foley catheter, syringes and a lubricant. The Examiner, however, allowed the claims over the Solazzo Publication, because it did not teach or suggest such elements with a patient aid—a feature that the Examiner had added through an Examiner’s amendment. A “patient aid” is not claimed in any of the challenged claims of the ’088 patent. Accordingly, the arguments in this Petition and the distinguishing feature over the Solazzo Publication in the ’761 patent examination differ.

C. IPRs In *Medline I*

Section 325(d) should not be applied in view of the IPRs in *Medline I*. None of the grounds of the IPRs utilized Solazzo. Nor would Solazzo be considered

cumulative of the art raised in any of the grounds of the IPRs. In particular, Solazzo provides a single level Foley catheter tray that includes multiple syringes, in contrast to the art raised in the IPR.

X. NOTICES AND STATEMENTS

Pursuant to 37 C.F.R. § 42.8(b)(1), C. R. Bard, Inc. and Becton, Dickinson and Company are the real parties-in-interest.

Pursuant to 37 C.F.R. § 42.8(b)(2), Petitioner identifies the following related matters: (i) *Medline Industries, Inc. v. C. R. Bard, Inc.*, 1:17-cv-07216 (N.D. Ill.) and (ii) an accompanying *inter partes* review petition directed to claims 1, 2, 6-10, 16-19 and 25-44 of the '088 patent.

Pursuant to 37 C.F.R. § 42.8(b)(3), Petitioner identifies the following counsel (and a power of attorney accompanies this Petition).

Lead Counsel for Petitioner	Backup Counsel for Petitioner
Mehran Arjomand marjomand@mofo.com Registration No.: 48,231 MORRISON & FOERSTER LLP 707 Wilshire Blvd., Suite 6000 Los Angeles, CA 90017-3543 Tel: (213) 892-5630 Fax: (323) 210-1329	Cong Luo cluo@mofo.com Registration No.: 68,120 MORRISON & FOERSTER LLP 425 Market Street San Francisco, CA 94105 Tel: (415) 268-6565 Fax: (415) 268-7522

Pursuant to 37 C.F.R. § 42.8(b)(4), service information for lead and back-up counsel is provided above. Petitioner consents to electronic service by email to 48010-Medline@mofo.com.

Pursuant to 37 C.F.R. § 42.104(a), Petitioner certifies that the ’088 patent is available for *inter partes* review and that Petitioner is not barred or estopped from requesting an *inter partes* review challenging the patent claims on the grounds identified in this Petition.

XI. CONCLUSION

Bard respectfully requests that the Board initiate *inter partes* review of the challenged claims.

The USPTO is authorized to charge any required fees, including the fee as set forth in 37 C.F.R. § 42.15(a) and any excess claim fees, to Deposit Account No. **03-1952** referencing Docket No. **480100000019**.

Dated: October 4, 2018

Respectfully submitted,

By /Mehran Arjomand/

Mehran Arjomand
Registration No.: 48,231
MORRISON & FOERSTER LLP
707 Wilshire Blvd., Suite 6000
Los Angeles, CA 90017-3543
Tel: (213) 892-5630
Fax: (323) 210-1329

Certification of Word Count (37 C.F.R. § 42.24)

I hereby certify that this Petition for *Inter Partes* Review has 13,276 words (as counted by the "Word Count" feature of the Microsoft Word™ word-processing system), exclusive of "a table of contents, a table of authorities, mandatory notices under § 42.8, a certificate of service or word count, or appendix of exhibits or claim listing."

Dated: October 4, 2018

By /Mehran Arjomand/
Mehran Arjomand

Certificate of Service (37 C.F.R. § 42.6(e)(4))

I hereby certify that the attached Petition for *Inter Partes* Review and supporting materials were served as of the below date by UPS, which is a means at least as fast and reliable as U.S. Express Mail, on the Patent Owner at the correspondence address indicated for U.S. Patent No. 9,745,088.

Philip H. Burrus, IV
Burrus Intellectual Property Law Group LLC
222 12th Street NE, Suite 1803
Atlanta GA 30309

Dated: October 4, 2018

By /Mehran Arjomand/
Mehran Arjomand
Registration No.: 48,231
MORRISON & FOERSTER LLP
707 Wilshire Blvd., Suite 6000
Los Angeles, CA 90017-3543
Tel: (213) 892-5630
Fax: (323) 210-1329