IN THE UNITED STATES PATENT AND TRADEMARK OFFICE

In re Patent of:	Frederick E. Shelton, IV	
U.S. Pat. No.:	8,479,969	Attorney Docket No.: 11030-0049IPA
Issue Date:	July 9, 2013	
Appl. Serial No.:	13/369,609	
Filing Date:	Feb. 9, 2012	
Title:	DRIVE INTERFACE FOR OPERABLY COUPLING A MANIPULATABLE SURGICAL TOOL TO A ROBOT	

Mail Stop Patent Board
Patent Trial and Appeal Board
U.S. Patent and Trademark Office
P.O. Box 1450
Alexandria, VA 22313-1450

PETITION FOR *INTER PARTES* REVIEW OF U.S. PATENT NO. 8,479,969 PURSUANT TO 35 U.S.C. §§ 311–319, 37 C.F.R. § 42

TABLE OF CONTENTS

EXHIBITS

IS1001	U.S. Pat. No. 8,479,969 to Shelton, IV ("the '969 Patent")
IS1002	Prosecution History of the '969 Patent (Serial No. 13/369,609)
IS1003	Reserved
IS1004	Reserved
IS1005	Declaration of Dr. Bryan Knodel (Giordano as Primary Reference)
IS1006	Reserved
IS1007	Reserved
IS1008	U.S. Patent No. 6,699,235 to Wallace et al. ("Wallace")
IS1009	U.S. Patent No. 6,331,181 to Tierney et al. ("Tierney")
IS1010	Reserved
IS1011	Reserved
IS1012	Reserved
IS1013	Reserved
IS1014	U.S. Patent App. No. 2008/0167672 to Giordano et al. ("Giordano")
IS1015	U.S. Patent No. 6,978,921 to Shelton et al. ("Shelton")

IS1016	U.S. Patent App. No. 2007/0158385 to Hueil et al. ("Hueil")

I. INTRODUCTION

Intuitive Surgical, Inc. ("Petitioner") petitions for *Inter Partes* Review ("IPR") of claims 1-11 and 24 of U.S. Patent 8,479,969 ("the '969 Patent"). The '969 Patent is entitled "Drive Interface for Operably Coupling a Manipulatable Surgical Tool to a Robot." Robotic surgical systems were known in the prior art, and likewise, surgical tools that interface with robotic surgical systems were known in the prior art. In fact, the '969 Patent incorporates by reference[1], and largely copies, the prior art robotic systems of Petitioner, which include drive interfaces to couple a manipulatable surgical tool to the robot:

> [T]he tool arrangement described above may be well-suited for use with those ***robotic systems manufactured by Intuitive Surgical, Inc. of Sunnyvale, Calif., U.S.A.***, many of which may be described in detail in various patents incorporated herein by reference. The unique and novel aspects of various embodiments of the present invention serve to ***utilize the rotary output motions supplied by the robotic system*** to generate specific control motions….

IS1001 at 31:56-59.[2]

The '969 Patent does no more than adapt prior art surgical instruments to the

---

[1] *See* IS1001, 23:35-37, incorporating by reference U.S. Pat. No. 7,524,320, which is a continuation of a division of the application that issued as the Tierney patent (IS1009).

[2] Emphasis added throughout unless otherwise stated.

prior art robotic surgical systems of Petitioner—and it does so using the teachings of Petitioner's own prior art, such as the "Tierney" patent (IS1009). Such is the epitome of obviousness.

Not surprisingly, the robotic surgical system described in the '969 Patent is uncannily similar to the prior art robotic surgical system described in Petitioner's Tierney patent:

'969 Patent	**Tierney Prior Art**
Robotic Controller	
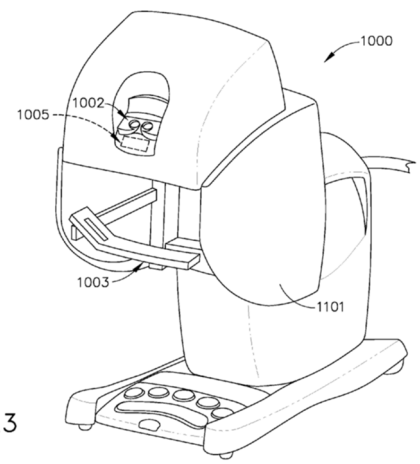 FIG. 23	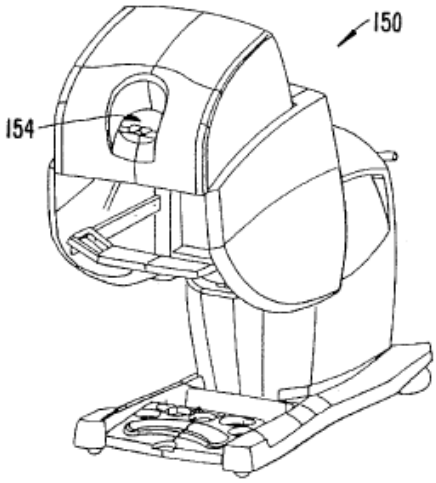 FIG. 8B.

’969 Patent	**Tierney Prior Art**
Robotic Manipulator	
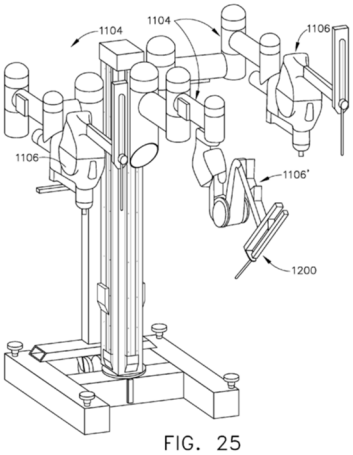 FIG. 25	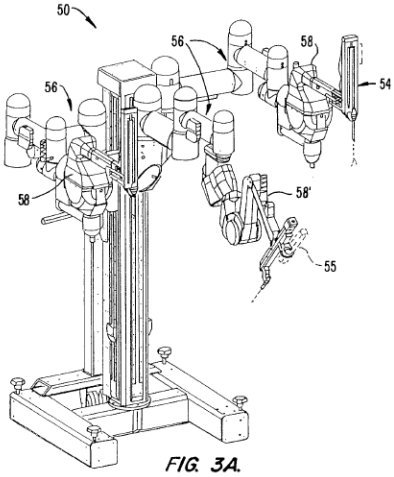 FIG. 3A.
Surgical Tool With Proximal Tool Holder	
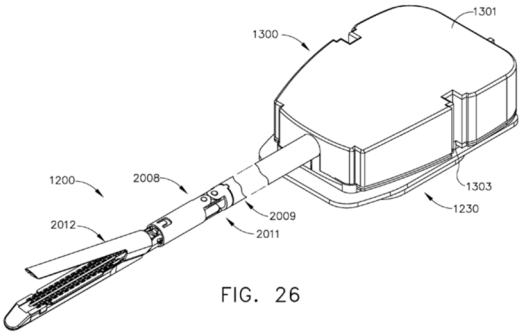 FIG. 26	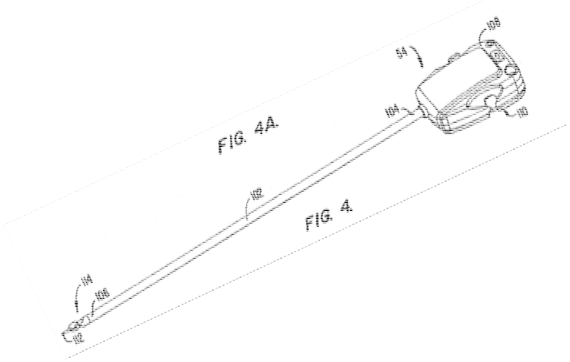

’969 Patent	**Tierney Prior Art**
Tool Drive Assembly	
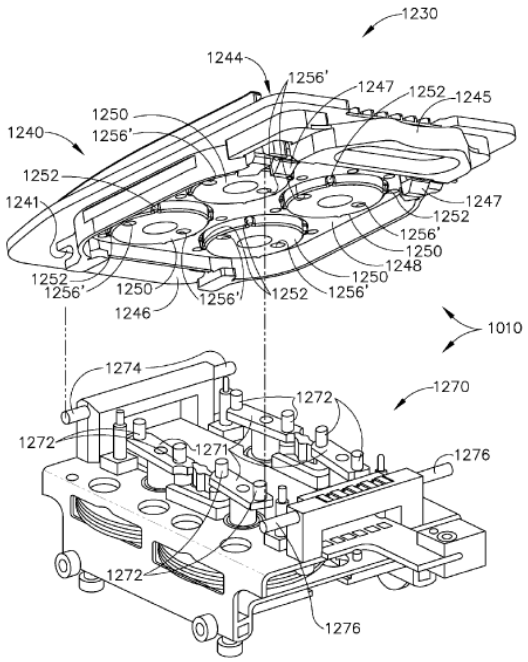 FIG. 27	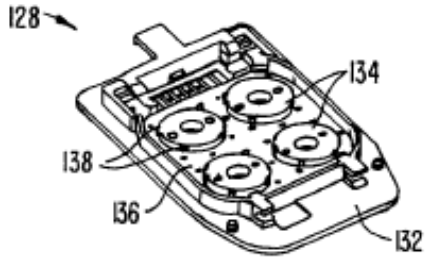 FIG. 7A. 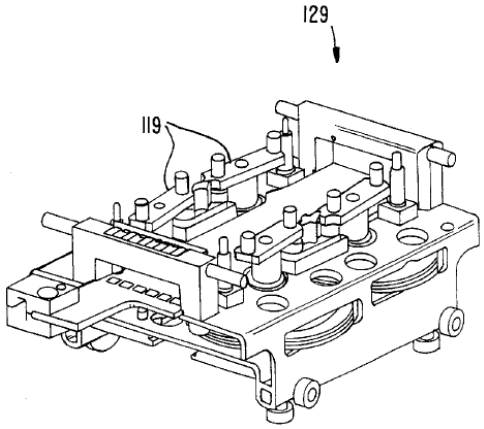 FIG. 7J.

Not only were Petitioner’s robotic systems in the prior art, but the surgical instruments described in the ’969 Patent were likewise in the prior art. Specifically, the ’969 Patent adapts for robotic use handheld surgical instruments that were already disclosed in the published grandparent application to the ’969 Patent, namely, U.S. Patent App. No. 2008/0167672 to Giordano et al. (“Giordano”). IS1014. The Giordano reference is 102(b) prior art to the claims of the ’969 Patent. For example, FIGs.1-22 of Giordano are essentially identical to FIGs. 1-22 of the ’969 Patent. The stapler in those figures uses a gear-driven firing

mechanism and a lever-driven closure tube assembly. In addition, Giordano incorporates by reference, and therefore discloses, another prior art stapler from U.S. Patent No. 6,978,921 to Shelton. The Shelton stapler uses both a gear-driven firing mechanism and a gear-driven closure tube assembly.

As shown in this petition, it would have been obvious to a POSITA to adapt prior art handheld surgical instruments, such as the surgical staplers disclosed by Giordano (including the incorporated Shelton stapler), for use with a surgical robot, such as Petitioner's prior art surgical robot disclosed by Wallace (which incorporates Tierney by reference). IS1008, 1:10-12, 16-18, 3:8-29.

A POSITA would have readily combined the robots of Wallace/Tierney with the handheld instruments of Giordano/Shelton. In fact, Giordano (via incorporation of Shelton) specifically teaches that "the closing and firing motions [of Shelton's handheld surgical stapler] may be generated by automated means." IS1015, 9:47-50; *see also* 12:45-53. And Wallace (via incorporation of Tierney) specifically teaches that "[o]ne or more of the robotic arms [in Petitioner's surgical robot] will often support a surgical tool which may be articulated (such as . . . staple appliers . . . or the like) . . . ." IS1009, 6:20-28.

In this petition, Petitioner demonstrates that Giordano in view of Wallace, and/or Giordano in view of Wallace and further in view of the prior art they incorporate by reference and others, renders the challenged claims invalid for

obviousness. Petitioner therefore requests IPR of the challenged claims on Grounds 1-5 below.

II. MANDATORY NOTICES UNDER 37 C.F.R § 42.8

A. Real Parties-In-Interest Under 37 C.F.R. § 42.8(b)(1)

Intuitive Surgical, Inc. is the real party-in-interest. No other party had access to the Petition, and no other party had any control over, or contributed to any funding of, the preparation or filing of the present Petition.

B. Related Matters Under 37 C.F.R. § 42.8(b)(2)

The '969 Patent is the subject of Civil Action No. 1:17-cv-00871-LPS, filed on June 30, 2017, in the United States District Court for the District of Delaware. Concurrently with this petition, Petitioner is filing two more IPR petitions related to the '969 Patent directed to different sets of claims, different statutory bases, and/or different primary references.

C. Lead And Back-Up Counsel Under 37 C.F.R. § 42.8(b)(3)

Petitioner provides the following designation of counsel.

LEAD COUNSEL	BACK-UP COUNSEL
Steven R. Katz, Reg. No. 43,706 3200 RBC Plaza, 60 South Sixth Street Minneapolis, MN 55402 Tel: 617-542-5070 / Fax: 877-769-7945	John C. Phillips, Reg. No. 35,322 Tel: 858-678-5070 Ryan P. O'Connor, Reg. No. 60,254 Tel: 858-678-5070

D. Service Information

Please address all correspondence to the address above. Petitioner consents

to electronic service by email at IPR11030-0049IPA@fr.com (referencing No. 11030-0049IPA and cc'ing PTABInbound@fr.com, katz@fr.com, phillips@fr.com, and oconnor@fr.com).

III. PAYMENT OF FEES – 37 C.F.R. § 42.103

Petitioner authorizes the Office to charge Deposit Account No. 06-1050 for the petition fee set in 37 C.F.R. § 42.15(a) and for any other required fees.

IV. REQUIREMENTS FOR IPR UNDER 37 C.F.R. § 42.104

A. Grounds for Standing Under 37 C.F.R. § 42.104(a)

Petitioner certifies that the '969 Patent is available for IPR, and Petitioner is not barred or estopped from requesting IPR.

B. Challenge Under 37 C.F.R. § 42.104(b) and Relief Requested

Petitioner requests IPR of claims 1-11 and 24 of the '969 Patent on the grounds listed below. A declaration from Dr. Bryan Knodel (IS1005) is provided in support.

Grounds	Claims	Basis for Rejections under 35 U.S.C. § 103
Ground 1	1-11, 24	Obvious over **Giordano** (IS1014) in view of **Wallace** (IS1008)
Ground 2	1-11, 24	Obvious over **Giordano** (IS1014) in view of **Wallace** (IS1008) and **Tierney** (IS1009)
Ground 3	1-6, 9-10	Obvious over **Shelton** (IS1015) in view of **Wallace** (IS1008) and **Tierney** (IS1009)
Ground 4	7, 8, 11, 24	Obvious over **Shelton** (IS1015) in view of **Giordano** (IS1014) and further in view of **Wallace** (IS1008) and **Tierney** (IS1009)

Ground 5	5, 6	Obvious over **Shelton** (IS1015) in view of **Wallace** (IS1008) and **Tierney** (IS1009), and further in view of **Hueil** (IS1016)

Giordano, Shelton, Wallace, Tierney, and Hueil each qualify as prior art under at least 35 U.S.C. § 102(b) because they are all patents that issued, or patent applications that published, more than one year before May 27, 2011, the priority application that first added subject matter related to robotic embodiments.

Giordano is the publication of the first priority application of the '969 Patent, and discloses the structure of prior art handheld surgical instruments. Wallace, Tierney, Shelton, and the patent that issued from Hueil were each made of record during prosecution as part of an 82-page IDS that listed over 2,000 references. IS1002, 357-438. Only Tierney, however, was substantively discussed during prosecution. *Id*. at 280-285. Additionally, the combinations presented here were not considered by the examiner.

V. SUMMARY OF THE '969 PATENT

Although the '969 Patent contains subject matter related to both handheld surgical instruments and instruments for use with a robotic surgical system, the claims all relate to the robotic embodiments, as the title of the patent makes clear: "DRIVE INTERFACE FOR OPERABLY COUPLING A MANIPULATABLE SURGICAL TOOL TO A ROBOT." IS1001, Title; *see also* 11:12-42; 23:50-24:39. The disclosed robotic surgical system includes the typical and expected

components, such as a "master controller and robotic arm cart" and a "tool drive assembly" that control surgical instruments. IS1001, 23:50-62; 24:62-25:29; FIGs. 26-27. As explained above, the robotic surgical system disclosed in the '969 patent was copied from Petitioner's prior art.

Various embodiments of the claimed surgical tool include features from the prior art, for example, (1) a tool mounting portion; (2) an end effector (such as a surgical stapler); (3) a shaft assembly for coupling the end effector to the tool mounting portion; (4) an articulation joint; (5) a closure tube assembly; and/or (6) a "tube gear segment 5114" on the shaft of the instrument, which is used to rotate the shaft and end effector relative to the tool mounting portion:

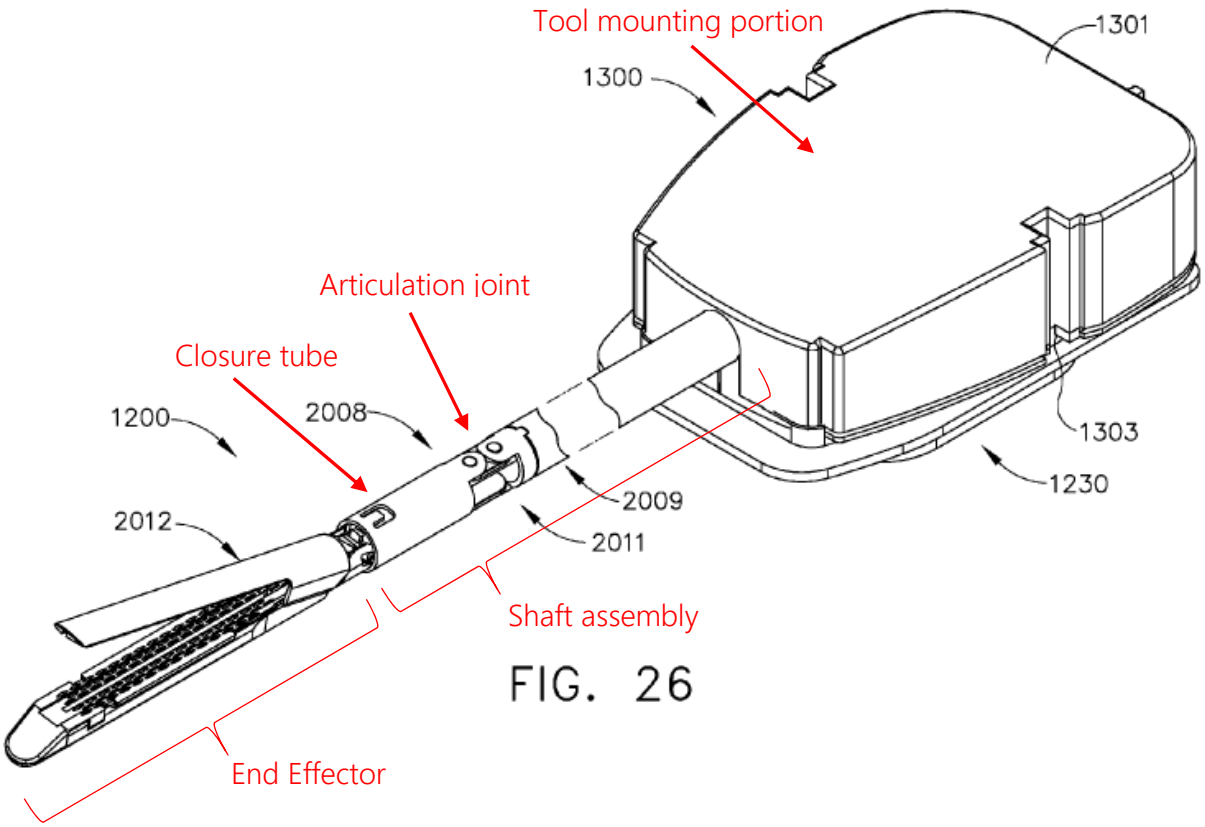

FIG. 26

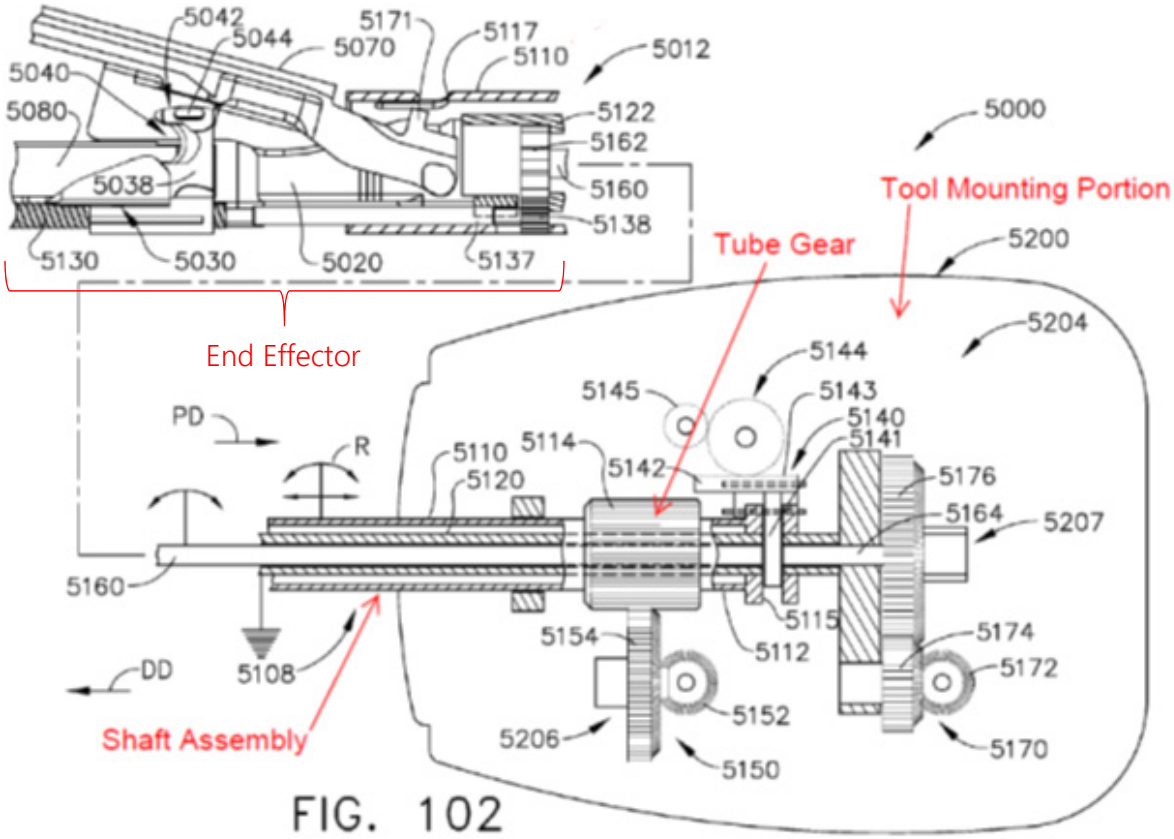

FIG. 102

IS1001, FIGs. 26, 102; 25:1-26:56; 27:19-47; 30:26-64; 65:32-64; 82:42-83:23.

None of these features were novel as of the filing of the '969 Patent or its parent application (filed on May 11, 2011) to which the '969 Patent claims priority.

VI. PROSECUTION HISTORY

During prosecution, the USPTO issued a single office action rejecting the broad independent claims, but indicating that two independent picture claims and a variety of dependent claims contained allowable subject matter. IS1002, 280-284. The broad claims were rejected over Petitioner's Tierney reference. *Id.*; IS1009 (Tierney). The applicant subsequently amended the independent claims to include

subject matter deemed allowable and added new dependent claims containing the allowable subject matter of original dependent claims. IS1002, 311, 304-310. The examiner then issued a notice of allowance. Rather than allow the patent to issue, applicant filed an RCE and submitted an IDS listing over 2,000 references. IS1002, 328-333; 357-483. A notice of allowance promptly followed, and the '969 Patent issued on July 9, 2013. IS1002, 547-552; IS1001, Face.

VII. PRIORITY DATE

The '969 Patent is directed to robotic embodiments. The robotic embodiments were added in the CIP application filed on May 27, 2011 (U.S. Application No. 13/118,259). The prior application, U.S. Application No. 11/651,807 does not provide support for any of the challenged claims. IS1014. For example, each of the challenged independent claims (1 and 24) recites a "tool mounting portion" "being configured to operably interface with ***the tool drive assembly***" on a "***robotic system***" with at least one "***rotatable body portion.***" The parent '807 application provides no support for these recitations. IS1005, ¶¶30-31. Rather, the parent '807 application is directed toward handheld "endoscopic surgical instrument[s]" with only a passing reference to "robotic-assisted surgery." IS1014, ¶¶15, 89, FIGs. 1-2.

VIII. CLAIM CONSTRUCTION UNDER 37 C.F.R. §§ 42.104(B)(3)

For the purposes of IPR only, Petitioner submits that the terms of the '969 Patent are to be given their broadest reasonable interpretation as understood by one of ordinary skill in the art at the time in view of the specification ("BRI").[3] 37 CFR §§ 42.100(b).

IX. SUMMARY OF THE PRIOR ART

A. Giordano

Giordano is the published grandparent application to which the '969 CIP patent claims priority. IS1014. Thus, it discloses the same hand-held, two stroke cutting and fastening instrument 10 disclosed in the '969 Patent. *Compare* IS1014 *with* IS1001. As shown below in Fig. 2 of Giordano, instrument 10 includes an articulation joint and an articulation control mechanism. IS1014, Fig. 2.

---

[3] Petitioner acknowledges that the Office has proposed to change from the BRI standard to the standard applied in District Courts. *See* 83 Fed. Reg. 21221 (proposed May 9, 2018). Petitioner submits that the prior art discussed herein invalidates the challenged claims under either standard. If the Office changes the rule after the filing of the Petition and applies the new standard to this proceeding, then due process requires the Office afford Petitioner an opportunity to provide additional argument and evidence on that issue.

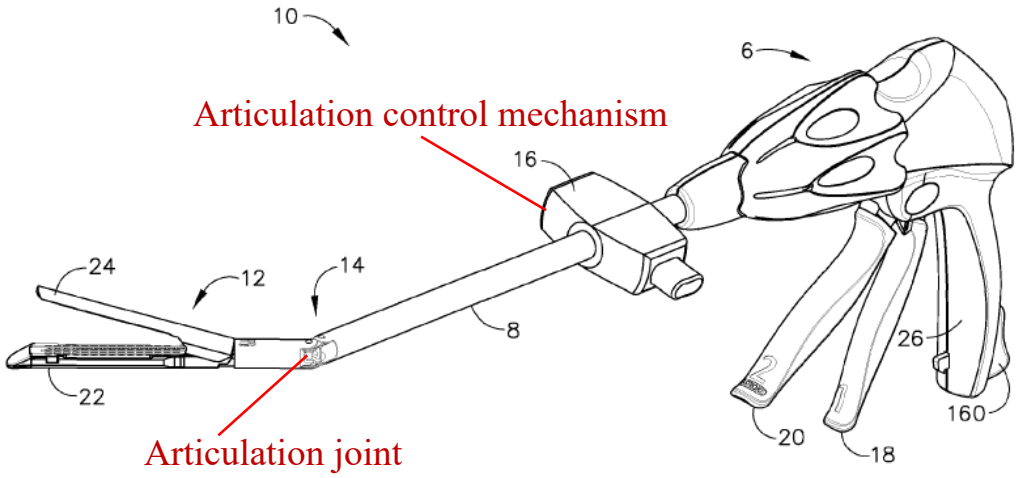

FIG. 2

Instrument 10 also includes a gear driven rotary firing mechanism, a closure tube assembly, and an elongated shaft assembly that rotates and articulates the end effector. *E.g.*, IS1014, Figs. 2, 7. The rotary drive transmission of the rotary firing mechanism is shown below in Fig. 7:

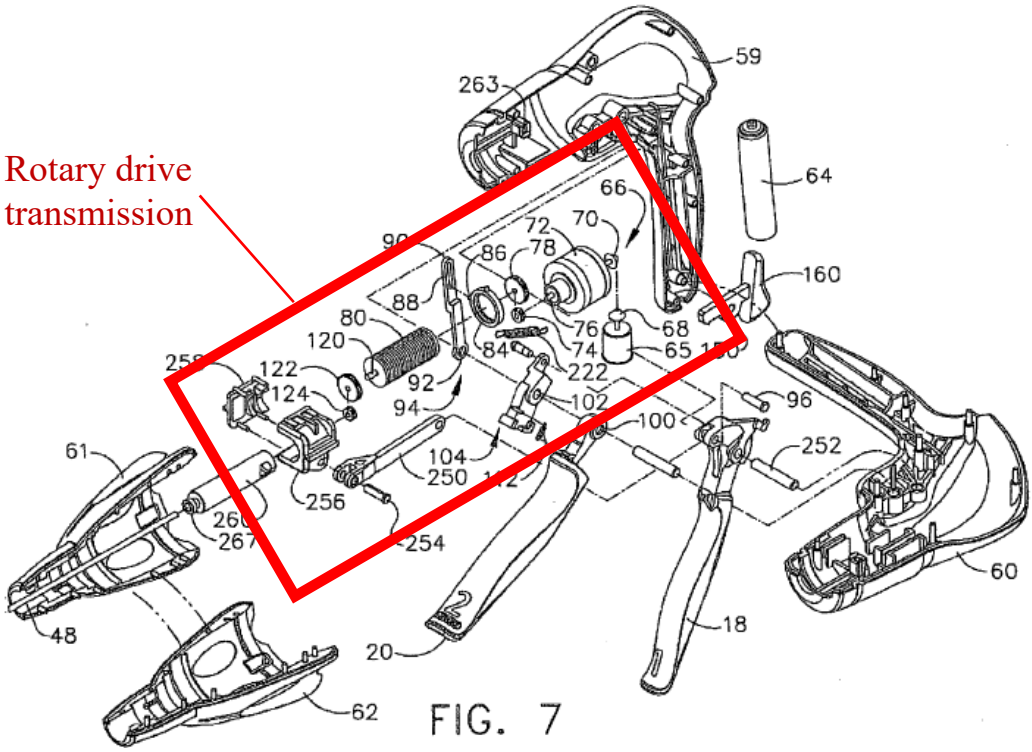

FIG. 7

IS1014, Fig. 7. The end effector and the elongated shaft assembly, which includes the closure tube assembly and the drive shafts of the rotary firing mechanism, is shown below:

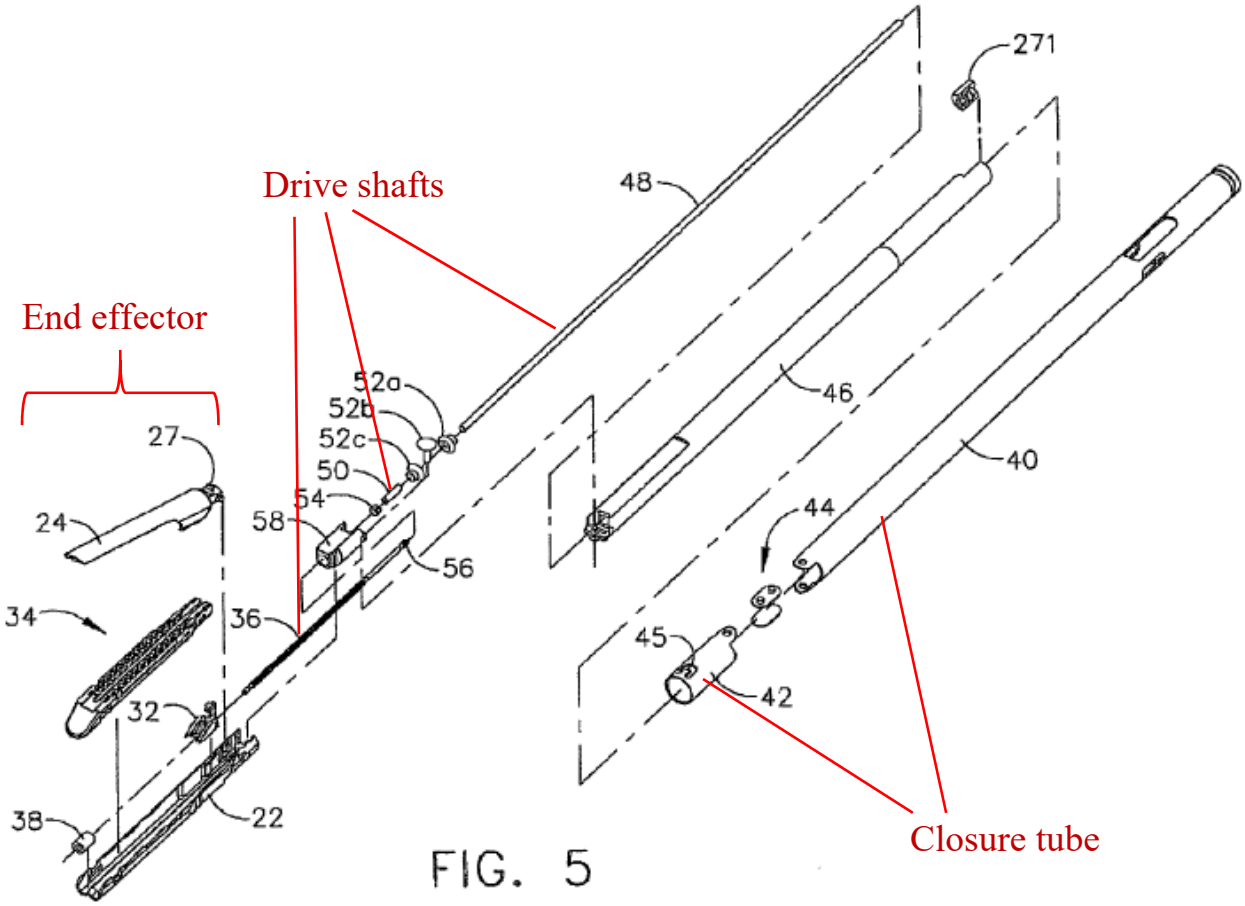

IS1014, Fig. 5.

B. Shelton

Giordano broadly and unequivocally states that it incorporates Shelton by reference because it "provides more details about such two stroke cutting and fastening instruments." IS1014, ¶39. This statement incorporates at least Shelton's description of two stroke cutting and fastening instruments into Giordano

as if it were set out expressly rather than through incorporation. *See, e.g., Harari v. Lee*, 656 F.3d 1331, 1335 (Fed. Cir. 2011) (holding that "the broad and unequivocal language" stating that "[t]he disclosures of the two applications are hereby incorporate[d] by reference" incorporated the entire disclosures of the two applications);[4] *Advanced Display Sys., Inc. v. Kent State Univ.*, 212 F.3d 1272, 1282 (Fed. Cir. 2000) ("Material not explicitly contained in [a] single, prior art document may still be considered for purposes of anticipation if that material is incorporated by reference into the document."); *see also* IS1005, ¶37 (confirming that a POSITA would have understood Giordano to incorporate at least Shelton's description of two stroke cutting and fastening instruments).

Shelton discloses a hand-held, two stroke cutting and fasting instrument 10 ("the Shelton stapler") with a gear driven closure mechanism, a closure tube assembly, and an elongated shaft assembly that rotates the end effector. IS1015, Fig. 1.

---

[4] *See also Biscotti Inc. v. Microsoft Corp.*, No. 2:13-CV-01015-JRG-RSP, 2017 U.S. Dist. LEXIS 144164, at *12 (E.D. Tex. May 11, 2017) (confirming that *Harari*, which addressed incorporation by reference in the context of written description, also applies to anticipation because "[t]he incorporation by reference doctrine does not vary across different applications of the doctrine.").

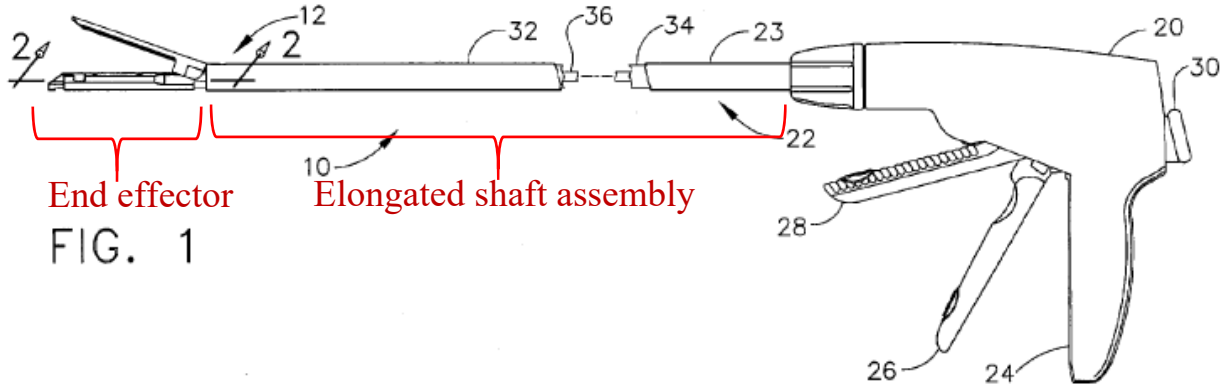

FIG. 1

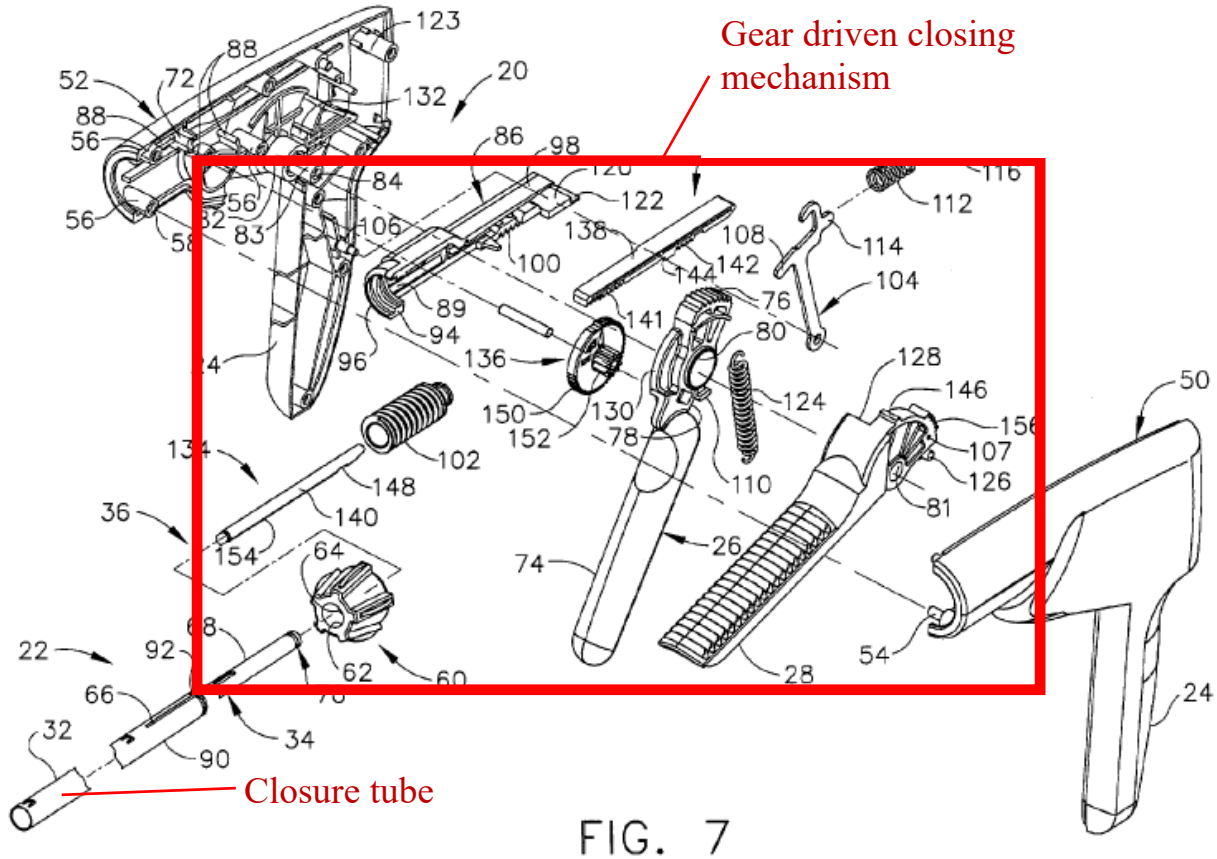

FIG. 7

C. Wallace

Wallace describes a gear driven surgical tool 50 for use with Petitioner's robotic system. IS1005, ¶¶41-42; IS1008, Abstract; 7:33-56, Figs. 1, 30. "The surgical tool 50 includes a rigid shaft 52 having a proximal end 54, a distal end 56 and a longitudinal axis there between. The proximal end 54 is coupled to a tool

base 62. The tool base 62 includes an interface 64 which mechanically and electrically couples the tool 50 to a manipulator on the robotic arm cart." IS1008, 7:34-40. The surgical tool also includes an elongated shaft assembly that rotates and articulates an end effector. IS1005, ¶42.

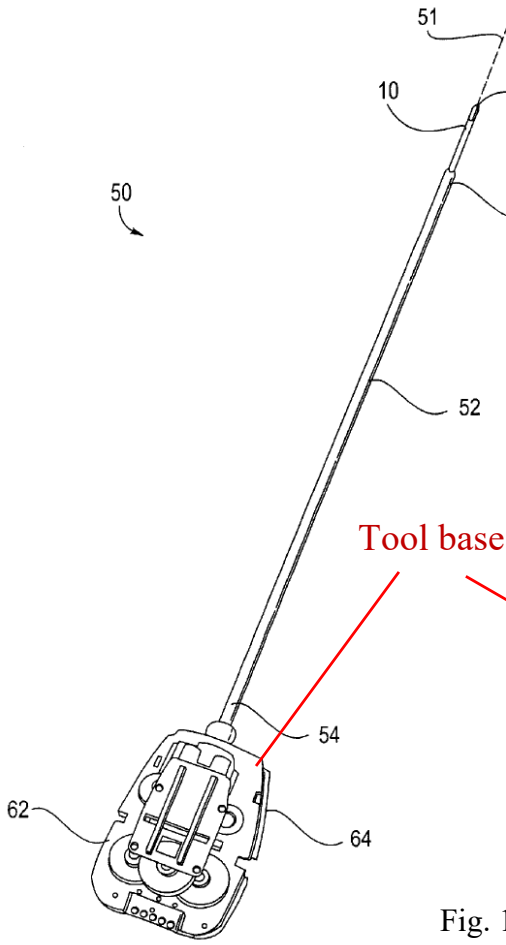

Tool base

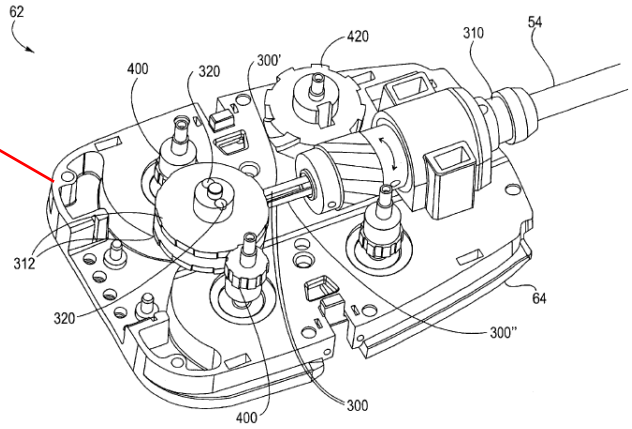

Fig. 1

Fig. 30

D. Tierney

Wallace broadly and unequivocally incorporates "the full disclose of" Tierney by reference. IS1005, ¶¶43-45; IS1008, 1:10-41. This statement incorporates all of Tierney into Wallace as if it were set out expressly rather than through incorporation. *See, e.g., Harari*, 656 F.3d at 1335; *Advanced Display Sys*, 212 F.3d at 1282; *Biscotti*, 2017 U.S. Dist. LEXIS 144164, at *12. As explained above, Tierney discloses the same robotic system that is disclosed in the '969 Patent. *See* Sections I, V.

E. Hueil

Hueil discloses a handheld surgical stapler that is very similar to the Shelton and Giordano staplers. Like Shelton, Hueil discloses an articulating surgical stapler with a knife bar. Hueil discloses an additional feature where the knife bar and knife are different components. Hueil further explains the benefit of such an arrangement, and thus suggests adding that feature to other prior art surgical staplers, such as Shelton.

X. THERE IS A REASONABLE LIKELIHOOD THAT AT LEAST ONE CLAIM OF THE '969 PATENT IS UNPATENTABLE

To arrive at the subject matter claimed in the '969 Patent, the applicants merely took the obvious step of modifying their prior art hand-held surgical instrument systems to include a tool mounting portion that can be mounted to, and driven by, Petitioner's robotic surgical system instead of a physician's hand. *See*

IS1005, ¶¶28, 46-48; IS1015, FIG. 22; IS1009, Fig. 4; *compare* IS1001, Fig. 2 *with* IS1001, Fig. 26; *see also In re Venner*, 262 F.2d 91, 95 (C.C.P.A. 1958) (holding that broadly providing an automatic means to replace a manual activity which accomplished the same result is not sufficient to distinguish over the prior art). For example, Giordano (which incorporates by reference the prior art surgical stapler of Shelton), when adapted for use with a surgical robot as suggested by Wallace (which incorporates the surgical robotic system of Tierney) results in the robotic surgical stapler disclosed and claimed in the '969 Patent.

Giordano's incorporation of Shelton	Wallace's incorporation of Tierney
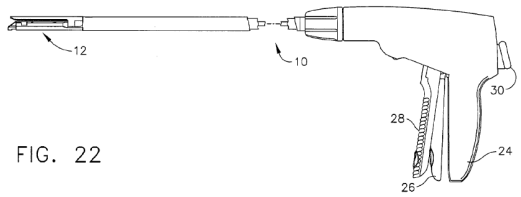 IS1015, FIG. 22	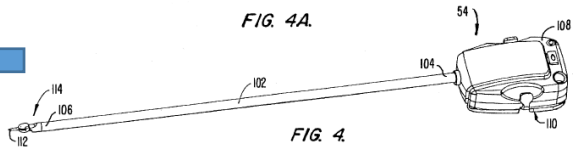 IS1009, Fig. 4

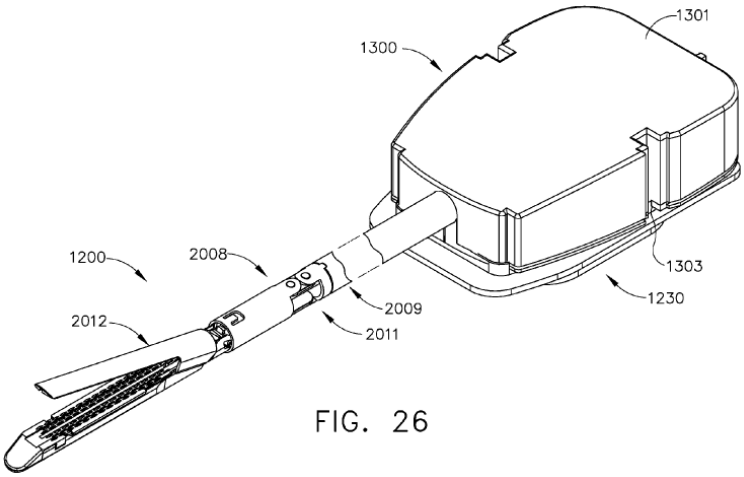

FIG. 26

IS1001, FIG. 26. Thus, claims 1-11 and 24 of the '969 Patent are invalid. *Id*.

A. Ground 1: Claims 1-11 and 24 Would Have Been Obvious Over Giordano in View of Wallace

As explained below, claims 1-6 and 9-10 would have been obvious over Shelton's stapler (incorporated into Giordano) as modified to interface with Wallace/Tierney's robotic system. Claims 7 and 8 would have been obvious over Shelton's stapler as modified to include Giordano's drive screw firing mechanism and as further modified to interface with Wallace/Tierney's robotic system. Claims 11 and 24 would have been obvious over Shelton's stapler as modified to

include Giordano's articulation system and as further modified to interface with Wallace/Tierney's robotic system (which also discloses articulating surgical instruments).

[1.P] A surgical tool for use with a robotic system that has a tool drive assembly that is operatively coupled to a control unit of the robotic system that is operable by inputs from an operator and is configured to provide at least one rotary output motion to at least one rotatable body portion supported on the tool drive assembly, said surgical tool comprising:

If the preamble is limiting, Giordano in view of Wallace discloses it. IS1005, ¶¶49-59. For claim 1, this petition relies on the Shelton embodiment incorporated by reference into Giordano.

"A surgical tool for use with a robotic system"

Giordano's incorporation of Shelton discloses "surgical stapling and severing instrument 10" ("the Shelton stapler"), which is a manually operated surgical tool. IS1005, ¶¶49-55; IS1015, 5:22-45, Figs. 1-2.

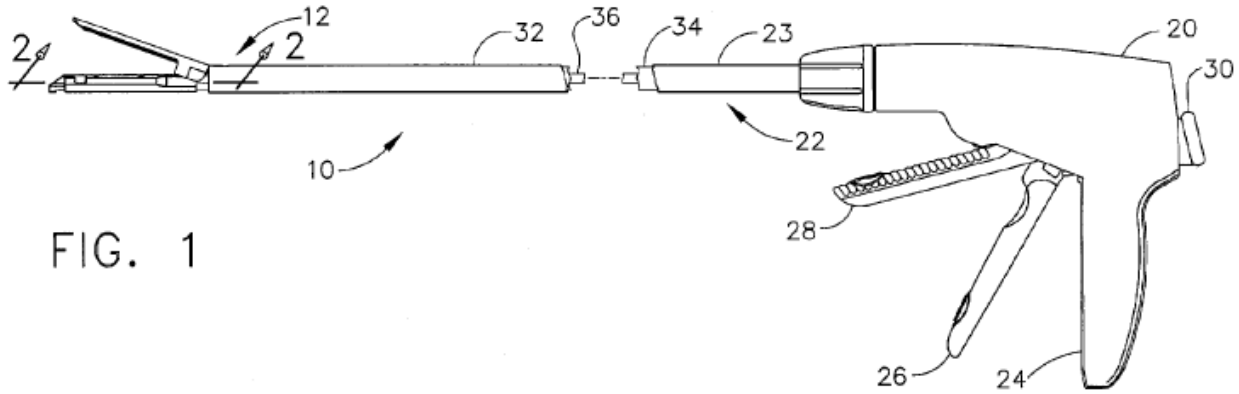

FIG. 1

It would have been obvious, in view of Wallace, to modify the Shelton stapler for use with a robotic system. IS1005, ¶50. In fact, although legally

unnecessary, the Shelton components merge relatively seamlessly into the Wallace robotic system. *See Allied Erecting and Dismantling Co., Inc. v. Genesis Attachments, LLC*, 825 F.3d 1373 (Fed. Cir. 2016) (not necessary that references be physically combinable).

We first explain the Shelton stapler operation. To use Shelton's stapler, a surgeon operates a first trigger to open and close the anvil and a second trigger to fire the stapler (drive a knife and wedge sled through the stapler). As shown in FIG. 6, closure trigger 26 causes "gear segment section 76" to rotate which meshes with "gear rack 100" causing gear rack 100 and its attached "yoke 86" to move distally. The yoke is "snap-fitted" to the proximal end of the closure sleeve 32, which moves distally to close the anvil. IS1015, 7:38-67.

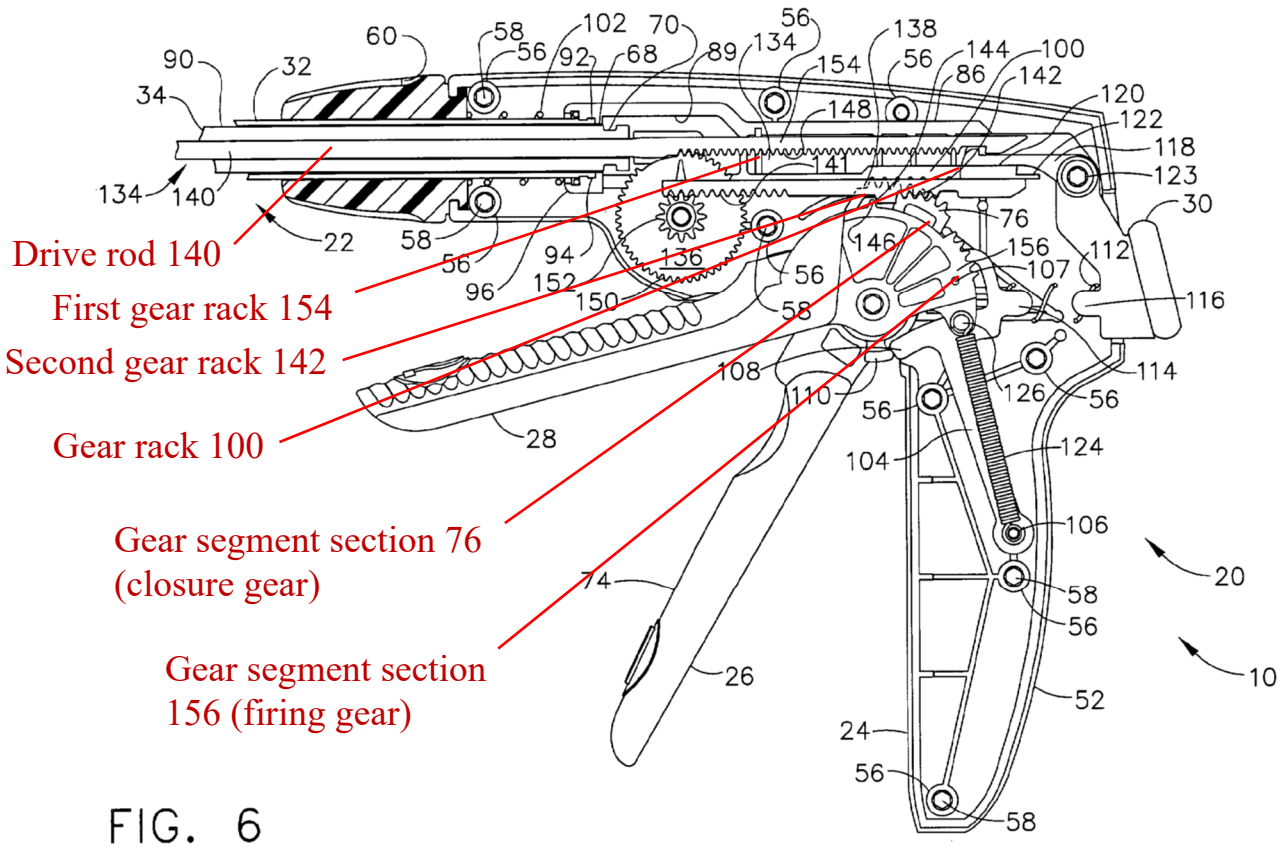

FIG. 6

For firing the stapler, a surgeon would pull "firing trigger 28" which rotates "gear segment section 156" which meshes with "second gear rack 142" on "drive member 138". Drive member 138 meshes with "pinion gear 152" which turns the "multiplier 136" which moves "first gear rack 154" on "metal drive rod 140." IS1015, 9:1-46. Thus, the closing motion of Shelton is driven by rotation of "gear segment section 76" and the firing motion is driven by rotation of the "gear segment section 156."

Wallace discloses a surgical tool for use with a surgical robotic system (the details of which are disclosed in Tierney, incorporated by reference into Wallace).

The surgical tool has "tool base 62 which includes an interface 64 which mechanically and electrically couples the tool 50 to a manipulator on the robotic arm cart." IS1008, 7:37-40. The Wallace tool base includes "gears 400" which are powered from the robot arm and which provide clockwise and counterclockwise rotational actuation motions for Wallace's instrument. IS1008, 13:48-54. In FIG. 30 of Wallace, four actuation gears are disclosed (although only two are labeled as gear "400"). Tierney, incorporated by reference, teaches that the gears would be driven by "driven elements 118" on the interface side of the tool base (which are turned by rotatable bodies on the adapter on the robot arm). IS1009, 16:41-52.

Wallace, FIG. 30	**Tierney, FIG. 6**
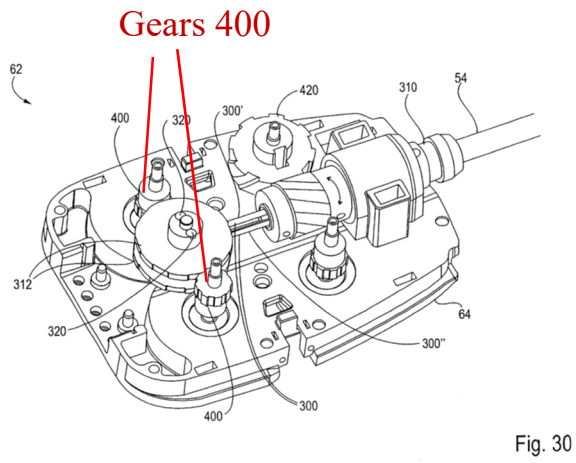 Fig. 30	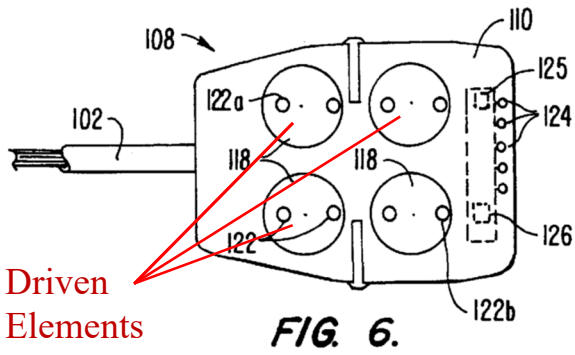 FIG. 6.

A POSITA would have readily understood that the Shelton device could be modified for robotic use by removing the handle and triggers and connecting the "second gear rack 142" of Shelton to one of the actuation gears 400 on the Wallace tool base and connecting the "gear rack 100" of Shelton to another one of the

actuation gears 400. In the combination, the gear 400 that replaced "gear segment section 76" of Shelton would drive "gear rack 100" to open and close the anvil of the modified stapler. The gear 400 that replaced "gear segment section 156" of Shelton would drive "second gear rack 142" to fire the modified stapler. IS1005, ¶50.

In the Shelton figure below, many of the components in the red outline would be moved from the Shelton handle to the tool base of Wallace for coupling to the robot arm:

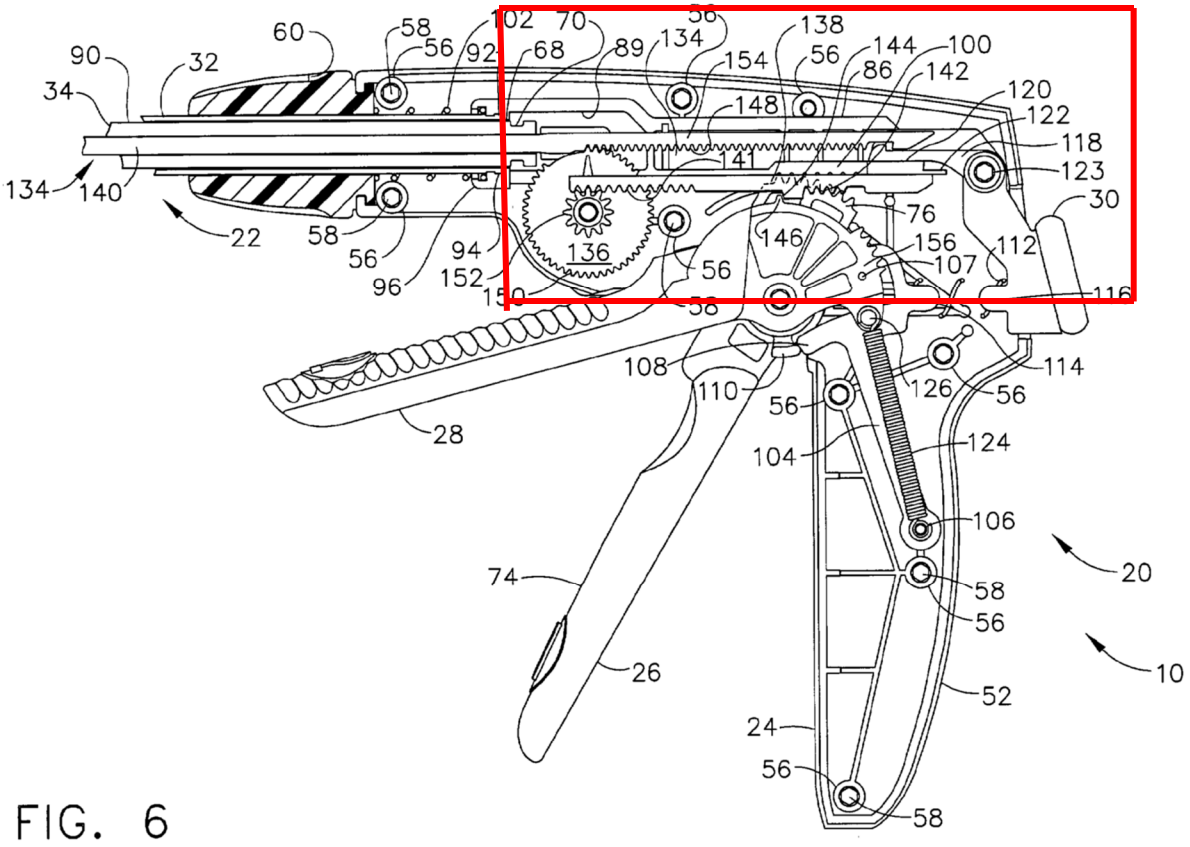

FIG. 6

A POSITA would have been motivated to modify the Shelton stapler for use with Wallace's robotic system for several reasons. IS1005, ¶¶50-55. **First**, a POSITA would have recognized that Wallace contemplates use of its robotic surgical system with surgical "staplers." *Id.*; IS1008, 2:18-21. A POSITA therefore would have turned to Giordano for details on how to implement a robotic tool with a surgical stapler end effector to increase the number of uses for Wallace's system. A POSITA would have been further motivated to adapt the Shelton stapler for robotic use because Shelton's stapler uses a rotary closure mechanism and a rotary firing mechanism and thus the disclosures of Giordano (including the incorporated Shelton stapler) are readily adaptable to the rotary interface of Wallace. In addition, Giordano discloses a drive screw mechanism to convert rotary motion to linear motion. IS1005, ¶¶50-55

Second, as recognized in the '969 Patent, "over the years, a variety of minimally invasive robotic (or 'telesurgical') systems have been developed to increase surgical dexterity as well as to permit a surgeon to operate on a patient in an intuitive manner." IS1001, 23:6-57. The robotic systems are designed to work with a variety of surgical tools, including surgical staplers, and thus, a POSITA would have been motivated to modify the Shelton stapler for use with Wallace's

robotic system to obtain the benefits of the robotic system (*e.g.*, increased dexterity and intuitive controls). Such staplers have linear components, such as a knife and staple sled, and thus use a rotary to linear motion converter such as a linkage, gear rack, or drive screw, as was well known in the art, and as taught by Shelton and Giordano. IS1005, ¶53.

Third, a POSITA would have recognized that Giordano contemplates modification of handheld surgical staplers for use with a surgical robot. For example, Giordano's incorporation of Shelton explicitly states, "the closing and firing motions may be generated by automated means." IS1015, 9:47-50. Giordano's incorporation of Shelton further states:

> Although an illustrative handle portion 20 described herein is manually operated by a clinician, it is consistent with aspects of the invention for some or all of the functions of a handle portion to be powered (*e.g.*, pneumatic, hydraulic, electromechanical, ultrasonic, etc.). Furthermore, controls of each of these functions may be manually presented on a handle portion or be remotely controlled (*e.g.*, wireless remote, automated remote console, etc.).

IS1015, 12:45-53; IS1005, ¶54. A POSITA therefore would have turned to Wallace for details on how to implement the Shelton stapler using an automated remote console. IS1005, ¶54.

Finally, a POSITA would have been prompted to modify the Shelton stapler for use with Wallace's robotic system because doing so would be merely the application of a known technique (use of a surgical stapler end effector) to a known system (a surgical robot) ready for improvement to yield predictable results without significantly altering or hindering the functions performed by the Shelton stapler and the Wallace/Tierney robotic system. IS1005 at ¶55; *KSR,* 550 U.S. at 417.

"A tool drive assembly that is operatively coupled to a control unit . . . and is configured to provide at least one rotary output motion to at least one rotatable body portion supported on the tool drive assembly"

Wallace's incorporation of Tierney discloses a tool drive assembly (the combination of the tool holder 129 and drive elements 119) that is operatively coupled to a control unit (master control station 150 alone or in combination with robotic arm slave cart 50). IS1005 at ¶56; IS1009, 4:33-35, 7:65-8:7, 10:14-15; 11:5-6, 11:33-35, Figs. 3A, 7J, 8A, 8B, 9; *see also* IS1014, 3:12-15 (confirming that the "robotic arm slave cart [50] is connected with [the] master controllers . . . ."). The tool holder 129 and drive elements 119 are shown below in Fig. 7J of Tierney:

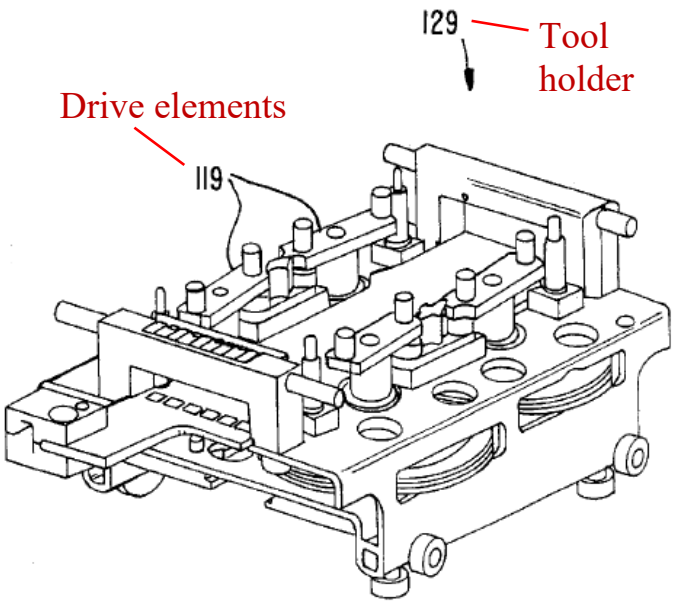

FIG. 7J.

IS1009, Fig. 7J. And the master control station 150 and robotic arm slave cart 50 are shown below in Figs. 3A and 8B of Tierney:

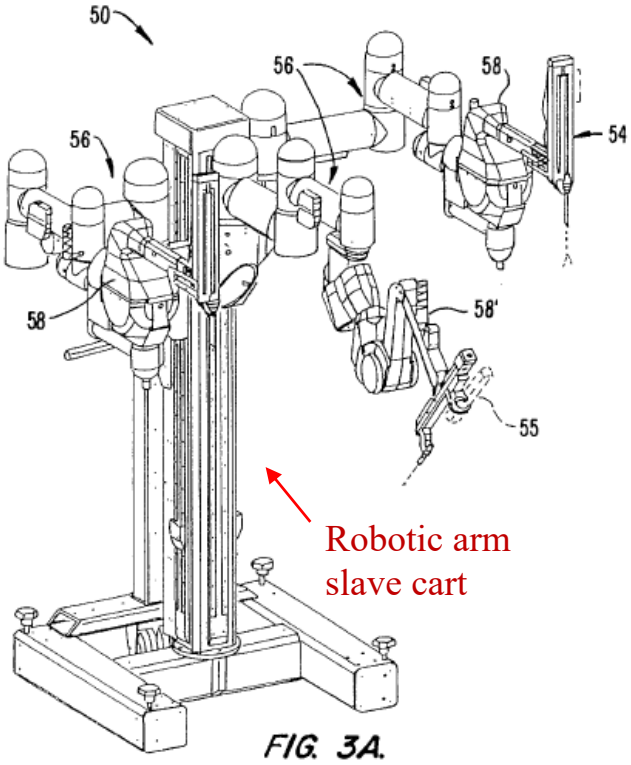

FIG. 3A.

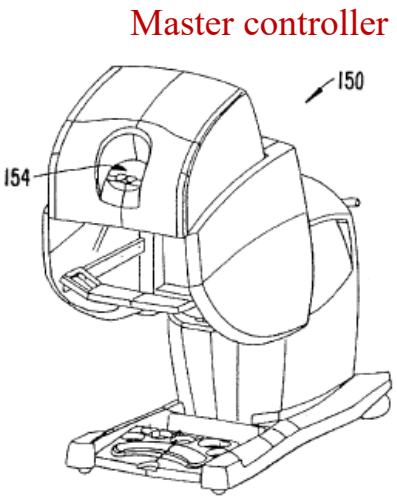

FIG. 8B.

IS1009, Figs. 3A, 8B.

The tool drive assembly is also configured to provide at least one rotary output motion to at least one rotatable body portion ("rotatable bodies 134" of adapter 128) supported on the tool drive assembly ("tool holder portion 129"). IS1005, ¶57; IS1009, 10:46-51. "Openings 140 on the tool side 130 and holder side 132 of rotatable bodies 134 are configured to accurately align the driven elements 118 of the tool with the drive elements of the holder." IS1009, 11:3-6, Figs. 6-7L.

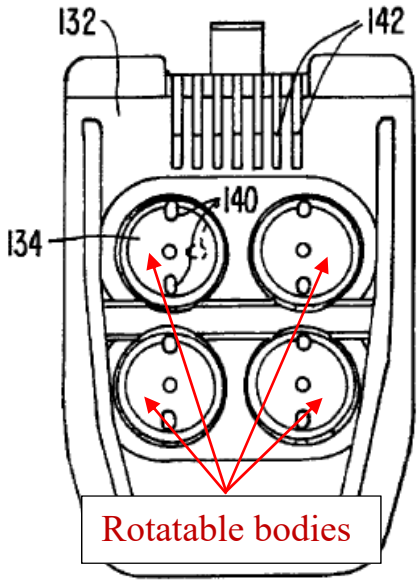

FIG. 7C.

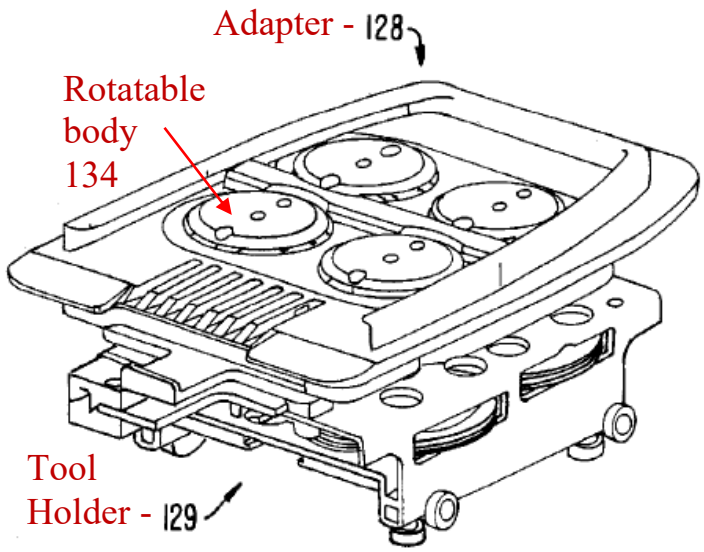

FIG. 7F.

"<u>A control unit of the robotic system that is operable by inputs from an operator</u>"

Wallace's incorporation of Tierney discloses a control unit ("master control station 150" alone or combined with "robotic arm slave cart 50," which are shown above) that is operable by inputs from an operator. IS1005, ¶58. For example,

"robotic arm slave cart [50] is connected with master controllers which are grasped by the surgeon and manipulated in space while the surgeon views the procedure on a stereo display. The master controllers are manual input devices which . . . have an actuatable handle for actuating the tools . . . ." IS1014, 3:17-25.

[1.1] a surgical end effector comprising:

Giordano discloses this element. IS1005, ¶59. Giordano's incorporation of Shelton discloses the surgical end effector 12. IS1015, Fig. 1.

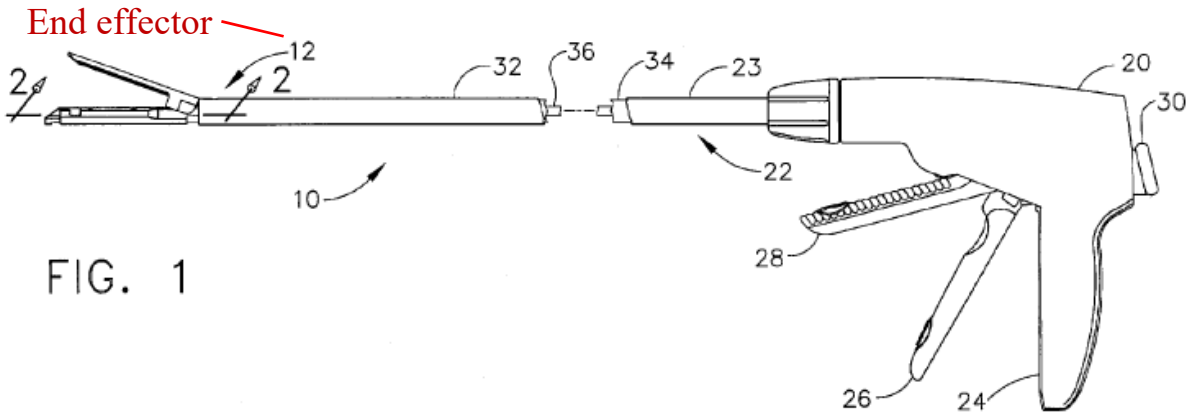

FIG. 1

[1.1.1] an elongated channel configured to operably support a surgical staple cartridge therein

Giordano discloses this element. IS1005, ¶60. Giordano's incorporation of Shelton disclose an elongated channel ("elongate channel 16") configured to operably support a surgical staple cartridge 37 therein. *Id.*; IS1015, 5:40-41, 6:4-6, Figs. 1-2, 10.

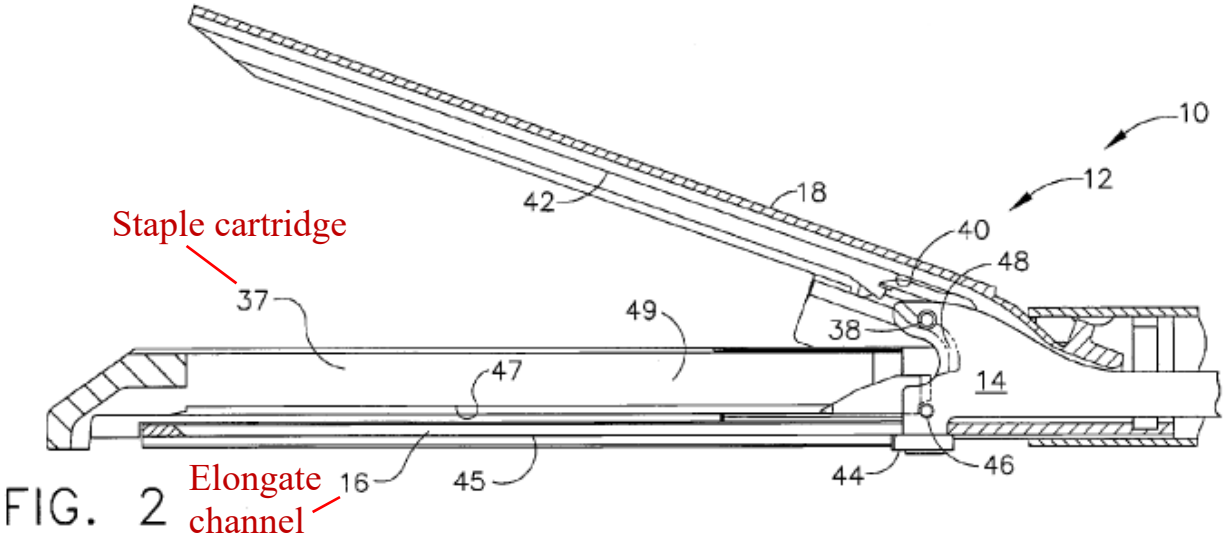

FIG. 2

[1.1.2] an anvil that is selectively movable between a first open position and second closed positions relative to the elongated channel and

Giordano discloses this element. IS1005, ¶61. Giordano's incorporation of Shelton discloses anvil 18, which is selectively movable (*e.g.*, by a physician) between a first open position and second closed positions relative to the elongated channel ("elongate channel 16"). IS1005, ¶61; IS1015, 5:37-41, Figs. 1-2.

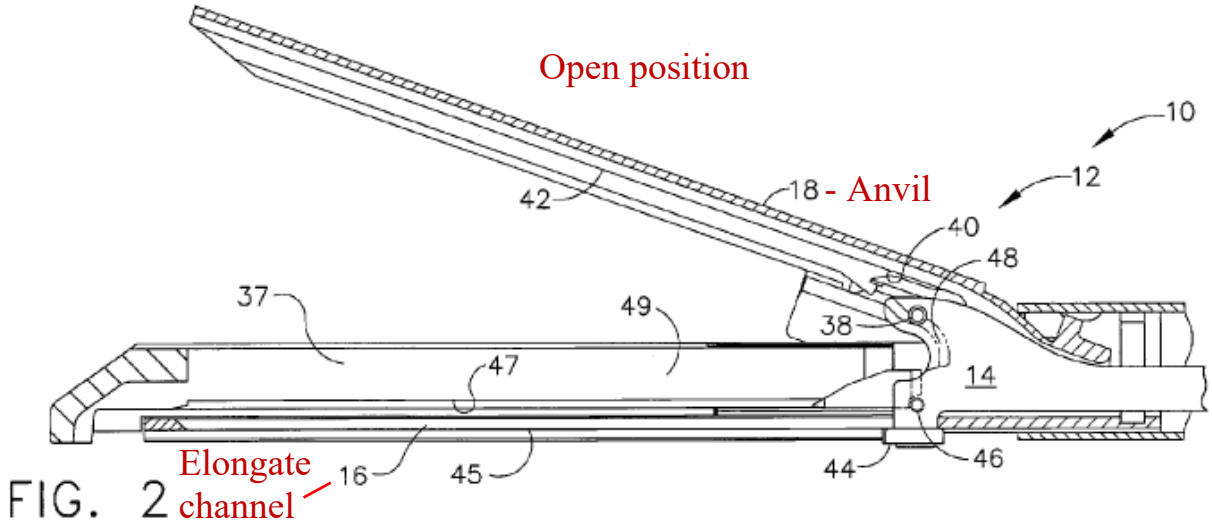

FIG. 2

Closed position

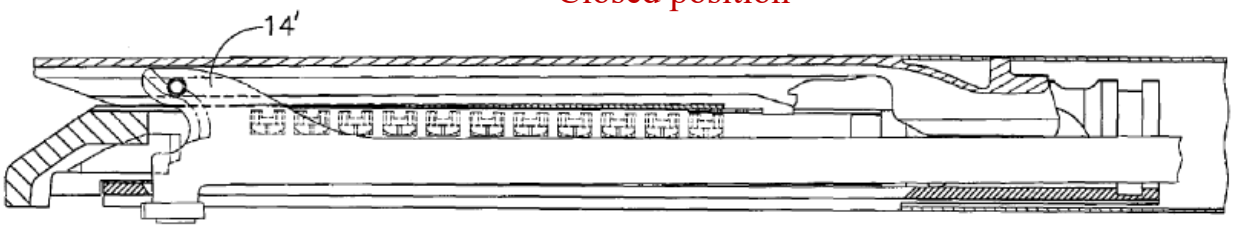

FIG. 5

[1.2] wherein the surgical tool further comprises an elongated shaft assembly operably coupled to said surgical end effector, said elongated shaft assembly comprising

Giordano discloses this element. IS1005, ¶62. As discussed in the following two sub-elements (elements [1.2.1]-[1.2.2]), the incorporated Shelton stapler includes an elongated shaft assembly operably coupled to the elongated channel of the end effector.

[1.2.1] a spine assembly including a distal end portion that is coupled to said elongated channel;

Giordano discloses this element. IS1005, ¶63. Giordano's incorporation of Shelton discloses a spine assembly (the combination of frame 34, channel anchoring member 228, and slotted guide 239), which includes a distal end portion ("channel anchoring member 228") that is coupled to the elongated channel ("elongated channel 16"). The spine assembly provides an internal supporting structure for the Shelton stapler. IS1005, ¶63; IS1015, 10:39-42, Fig. 11.

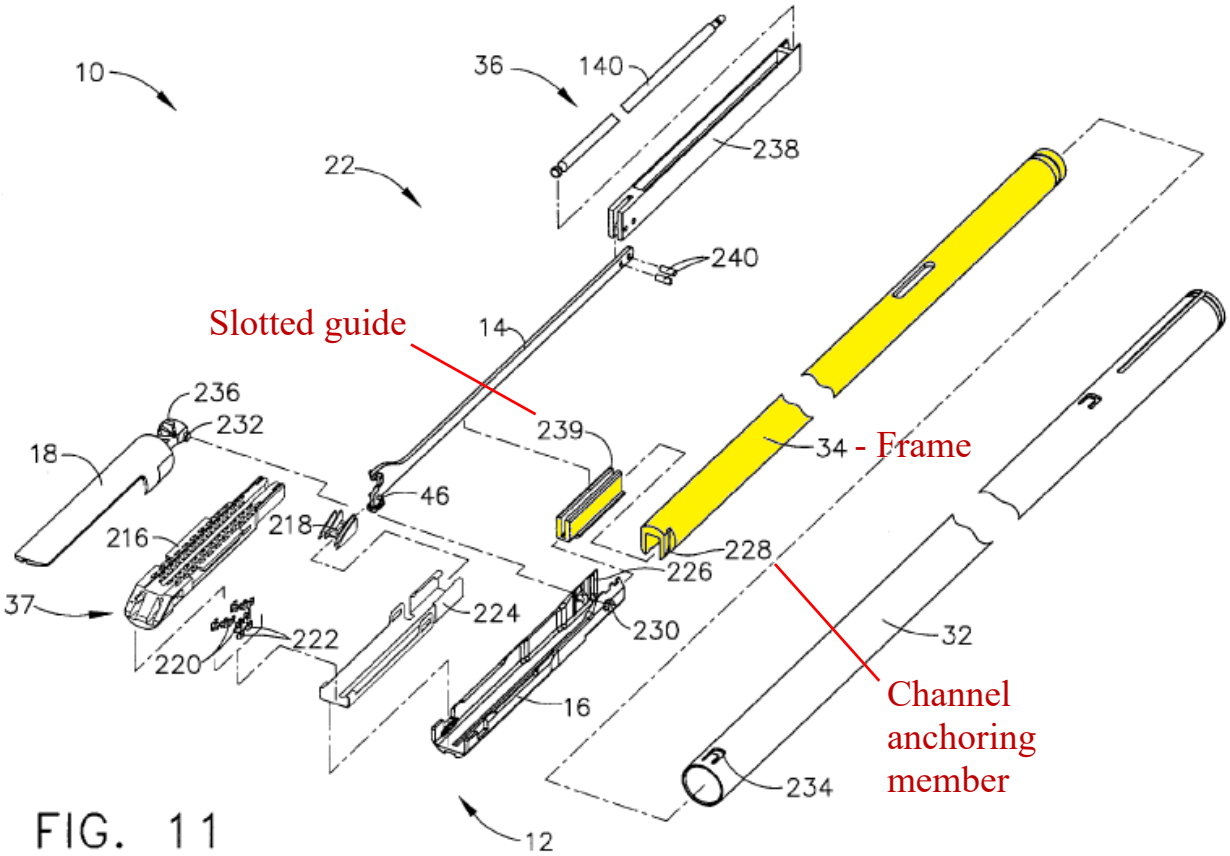

FIG. 11

[1.2.2] a closure tube assembly movably supported on said spine assembly, said closure tube assembly comprising a distal end configured for operable interaction with said anvil; and

Giordano discloses this element. IS1005, ¶¶64-65. Giordano's incorporation of Shelton discloses a closure tube assembly (*e.g.*, closure sleeve 32, flange 92, and tab 234), which is movably supported on the spine assembly (*see* Ground 1, element [1.2.1]). IS1005, ¶64; IS1015, 7:58-60, 10:44-48.

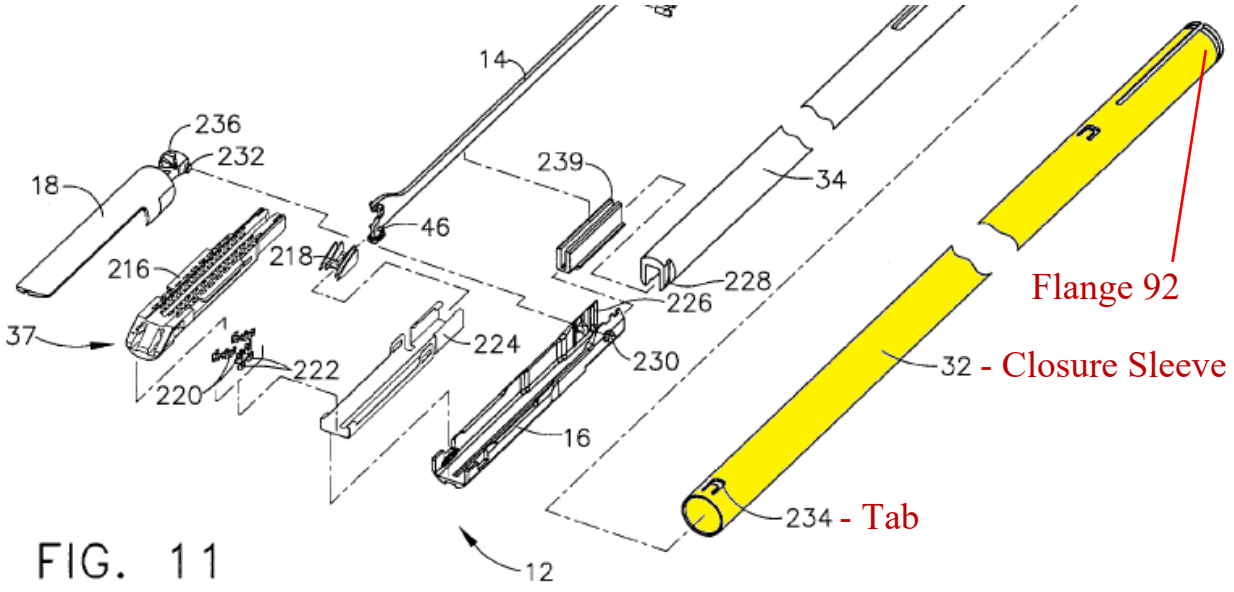

FIG. 11

As shown above, the closure tube assembly comprises a distal end that is configured for operable interaction with anvil 18. IS1005, ¶65. Specifically, "distally presented tab 234 . . . engages an anvil feature 236 proximate but distal to the anvil pivot 232 on the anvil 18 to thereby effect opening and closing of the anvil 18." IS1015, 10:44-48, Figs. 7, 11.

[1.2.3] at least one gear-driven portion, wherein one said gear driven portion is in operable communication with said closure tube assembly and

Giordano discloses this element. IS1005, ¶66. Giordano's incorporation of Shelton discloses a gear driven portion ("yoke 86" and "closure sleeve 32" of the Shelton stapler), which is driven by the gear segment section 76 of the Shelton stapler's closure trigger 26 and by gear 400 of Wallace in the combination, and is in operable engagement with the closure tube assembly (*see* Ground 1, element [1.2.2]). IS1005, ¶66. As explained in Shelton, a "proximal end 90 of the closure

sleeve 32 is provided with a flange 92 that is snap-fitted into a receiving recess 94 formed in a distal end 96 of the yoke 86. [And] yoke 86 has a gear rack 100 that is engaged by the gear segment section 76 of the closure trigger 26." The closure sleeve 32 component is part of the elongate shaft assembly of Shelton. In addition, the yoke may likewise be considered part of the elongated shaft assembly, given that it is snap-fitted into the closure sleeve. IS1015, 7:58-62, Fig. 7.

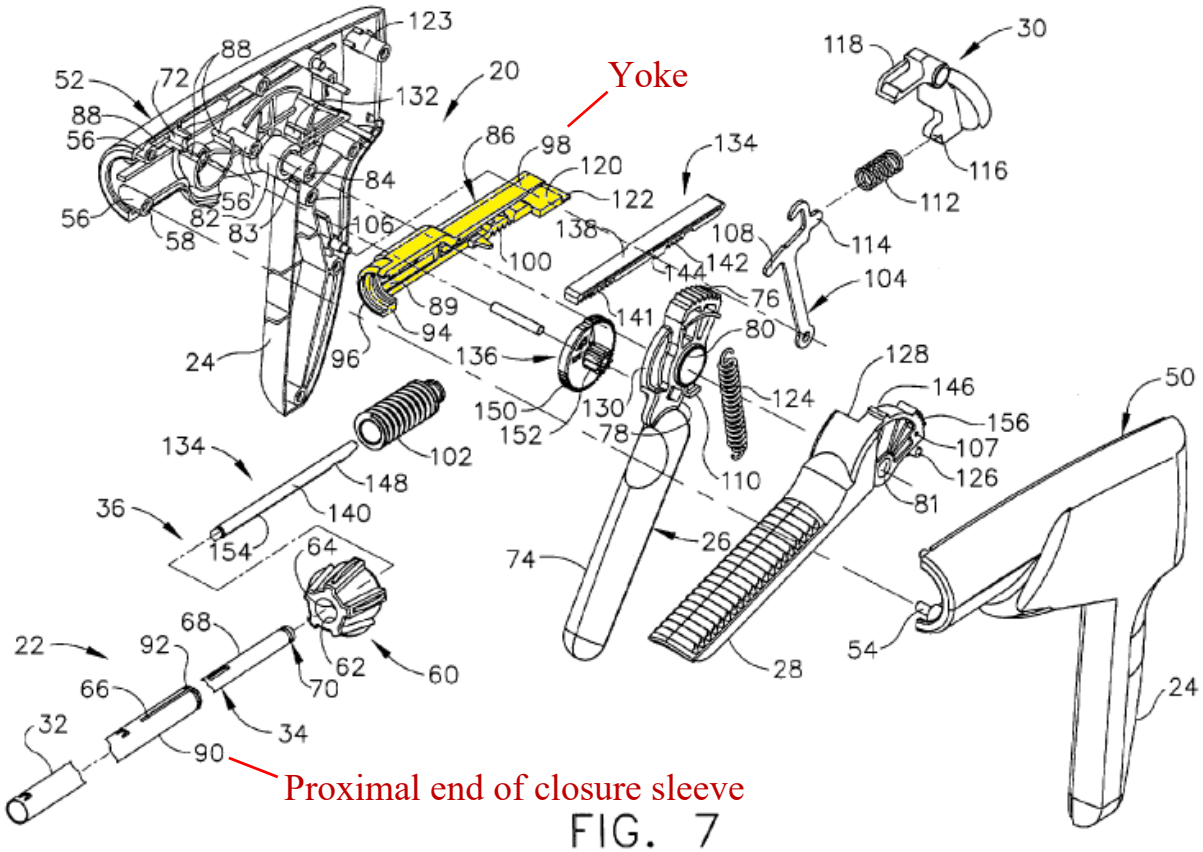

FIG. 7

[1.3] wherein said surgical tool further comprises: a tool mounting portion operably coupled to said elongated shaft assembly, said tool mounting portion being configured to operably interface with the tool drive assembly when coupled thereto and operably supporting a proximal end of the spine assembly thereon, said tool mounting portion comprising:

Giordano in view of Wallace discloses this element. IS1005, ¶¶67-71.

"<u>A tool mounting portion operably coupled to said elongated shaft assembly</u>"

Wallace discloses a tool mounting portion ("tool base 62"), which is operably coupled to an elongated shaft ("rigid shaft 52") of an elongated shaft assembly. IS1005, ¶67; IS1008, 7:33-40, Figs. 1, 26-30.

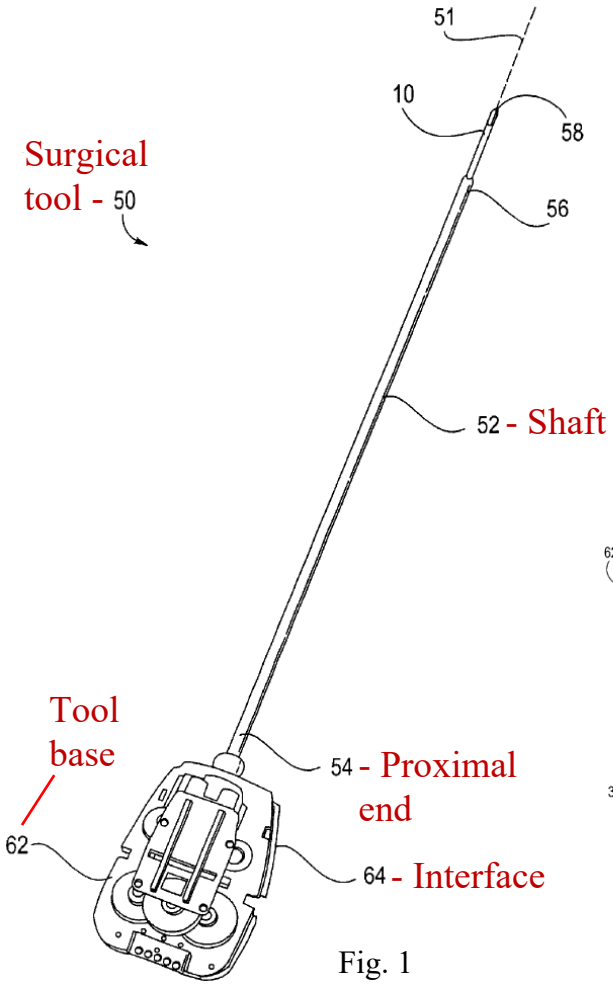

Fig. 1

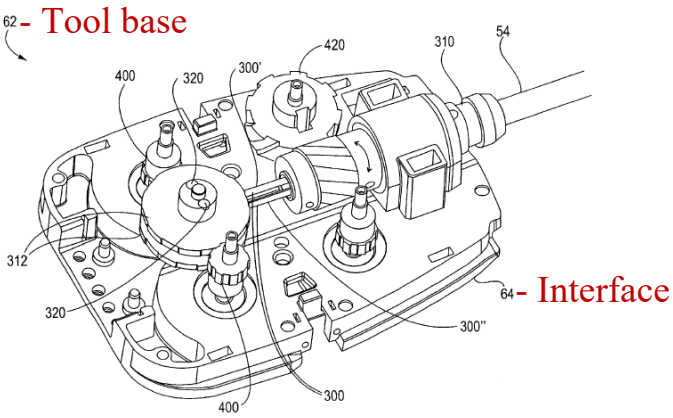

Fig. 30

Wallace's incorporation of Tierney discloses a similar tool mounting portion ("proximal housing 108") and elongated shaft assembly (which includes "shaft 102"). IS1005, ¶67; IS1009, 9:8-11, Fig. 4.

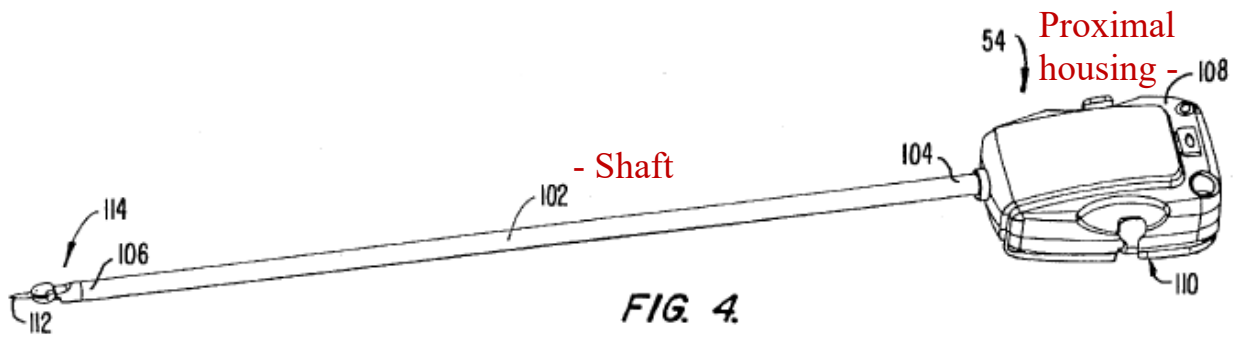

FIG. 4.

As discussed above (*see* Ground 1, element [1.P]), it would have been obvious to combine the Shelton stapler with the tool mounting portion of Wallace. Thus, in the resulting device, the tool mounting portion disclosed in Wallace (*e.g.*, tool base 62 or proximal housing 108) would be operably coupled to the corresponding elongated shaft assembly of the Shelton stapler. IS1005, ¶68.

"<u>Said tool mounting portion being configured to operably interface with the tool drive assembly when coupled thereto</u>"

Wallace's tool mounting portion (interface portion of the "tool base 62") is configured to operably interface with the tool drive assembly (the combination of tool holder 129 and drive elements 119; *see* Ground 1, element [1.P]) on the robot arm when coupled thereto. IS1005, ¶69. For example, Wallace confirms, "tool base 62 includes an interface 64 which mechanically and electrically couples the

tool 50 to a manipulator on the robotic arm cart." IS1008, 7:37-40. Not surprisingly, Wallace's incorporation of Tierney discloses the same relationship between these components. *See* IS1009, 9:10-12 (confirming "proximal housing 108 includes an interface 110 which mechanically and electrically couples tool 54 to the manipulator."). In fact, Wallace's incorporation of Tierney shows the surgical instrument (tool 54) just before being coupled to the tool drive assembly via the adapter 128:

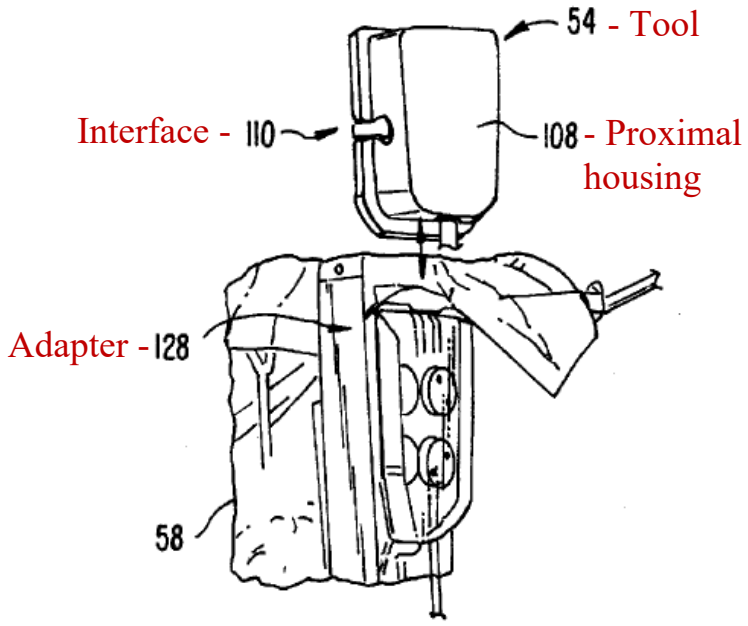

FIG. 14C.

IS1009, FIG. 14C; IS1005, ¶69.

Wallace's incorporation of Tierney also describes "driven elements 118 [of proximal housing 108] provid[ing] mechanical coupling of the end effector to drive motors mounted to the manipulator." IS1009, 10:12-15, Fig. 6:

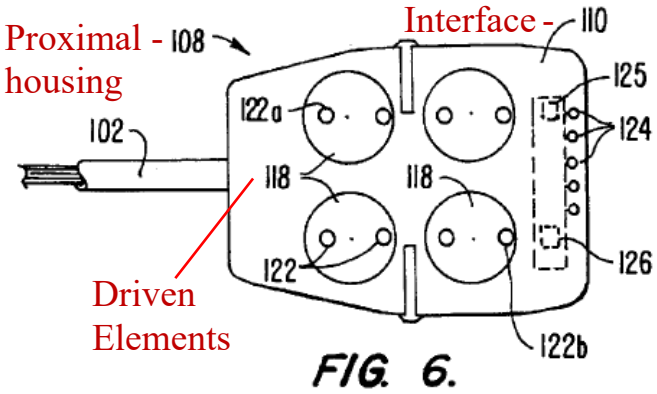

FIG. 6.

The adapter 128, which can be considered part of the tool drive assembly, receives rotary motions from tool holder 129 and drive elements 119 and couples the tool mounting portion to those elements. IS1009, 10:36-40, Figs. 6, 7F, 14C.

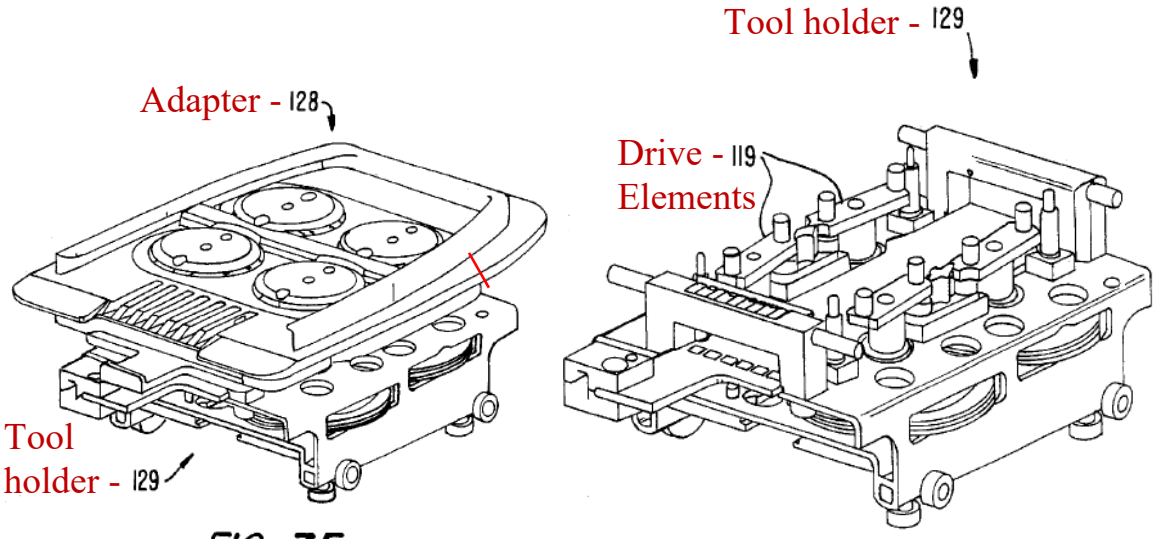

FIG. 7F. FIG. 7J.

"<u>Said tool mounting portion . . . operably supporting a proximal end of the spine assembly thereon</u>"

The spine assemblies discussed above (*see* Ground 1, element [1.2.1]) are operably supported by the handle portion 20 of the Shelton stapler. IS1005, ¶71.

For example, frame 34 in the spine assembly of the Shelton stapler "connects the handle portion 20 to the end effector 12." IS1015, 5:65-66; *see also* 7:34-38.

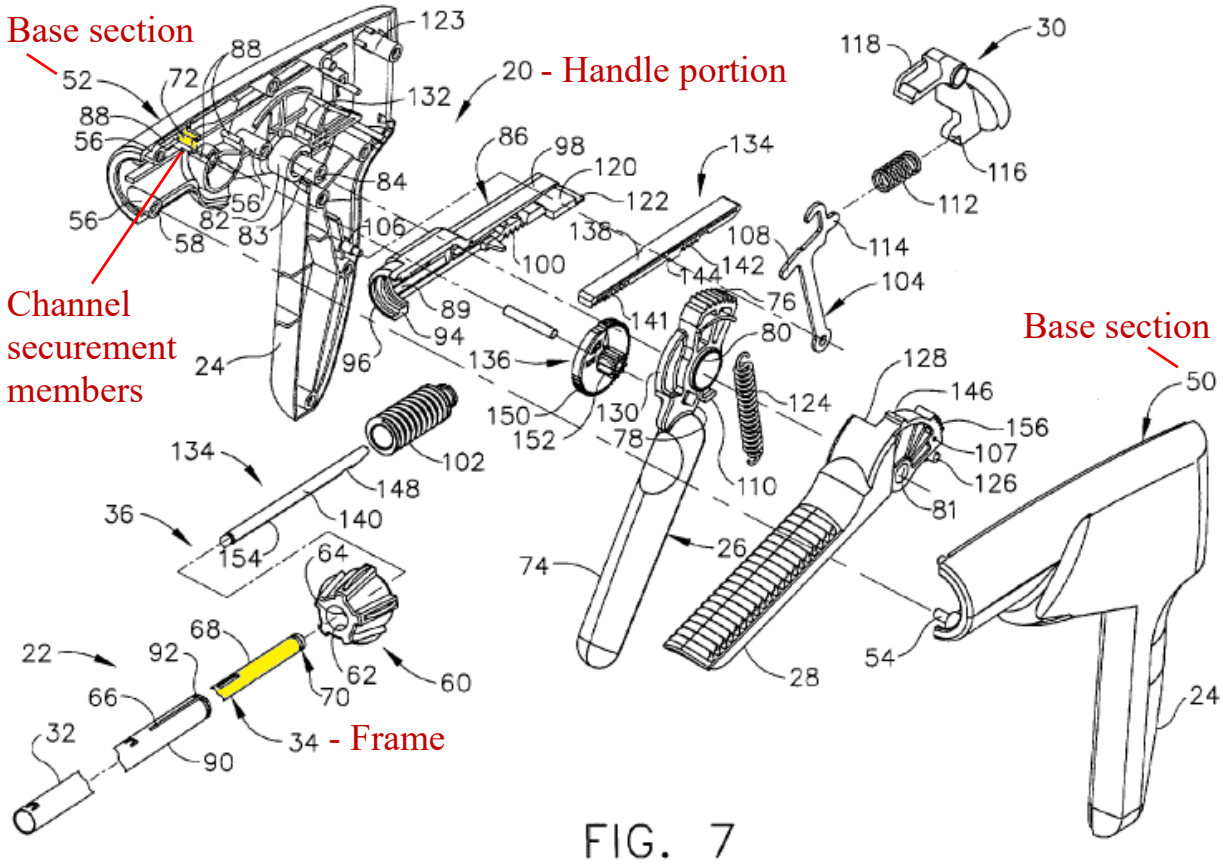

When combined with Wallace, the handle portion of the Shelton stapler would be replaced with Wallace's tool mounting portion so that the surgical instrument may be attached to Wallace's surgical robot. In the combination, the spine assembly of the Shelton stapler would be operably supported by the housing of Wallace's tool mounting portion ("tool base 62") instead of the Shelton stapler's handle portion 20. IS1005, ¶71.

[1.4] a driven element rotatably supported on said tool mounting portion and configured for driving engagement with a corresponding one of the at least one

rotatable body portions of the tool drive assembly to receive corresponding rotary output motions therefrom

Wallace discloses this element. IS1005, ¶¶72-73. Wallace's incorporation of Tierney discloses a driven element ("driven element 118"), which is rotatably supported on the tool mounting portion ("tool base 62" or "proximal housing 108") and configured for driving engagement with a corresponding one of the at least one rotatable body portions ("rotatable bodies 134") of the tool drive assembly to receive corresponding rotary output motions therefrom. IS1005, ¶¶72-73; IS1009, 9:19, 10:12-20. As shown in the figures below, "[o]penings 140 on the . . . rotatable bodies 134 are configured to accurately align the driven elements 118 of the tool with the drive elements [119] of the holder [129]." IS1009, 11:3-6 Figs. 6, 7C, 7F, 14C.

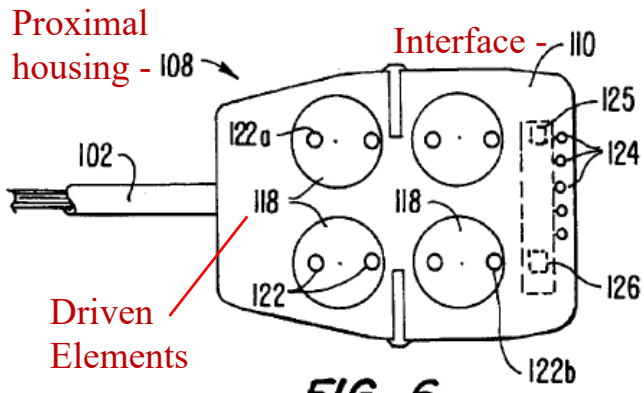

FIG. 6.

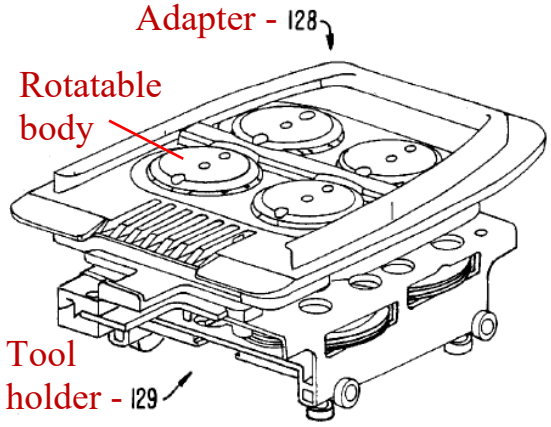

FIG. 7F.

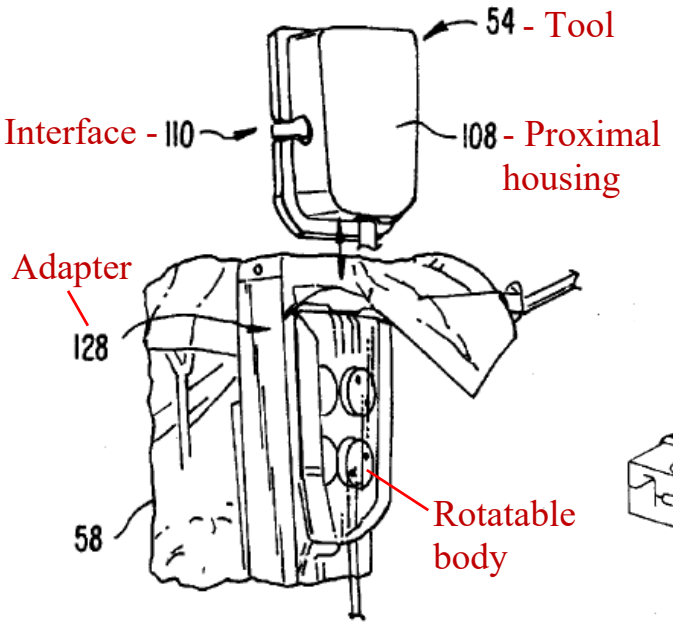

FIG. 14C.

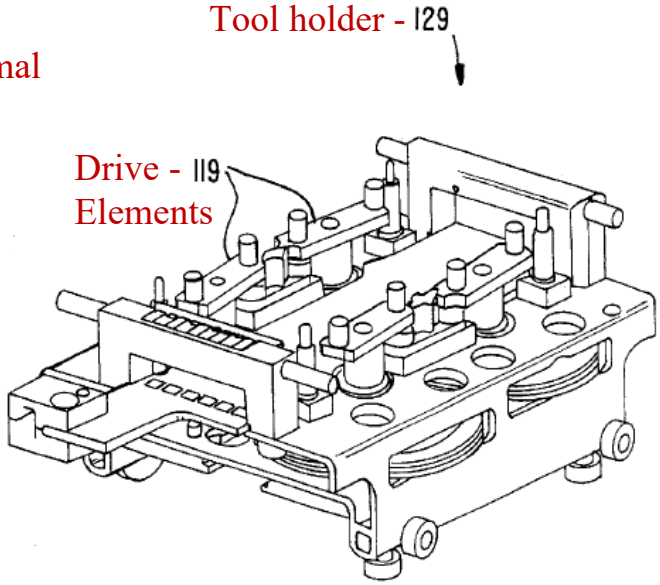

FIG. 7J.

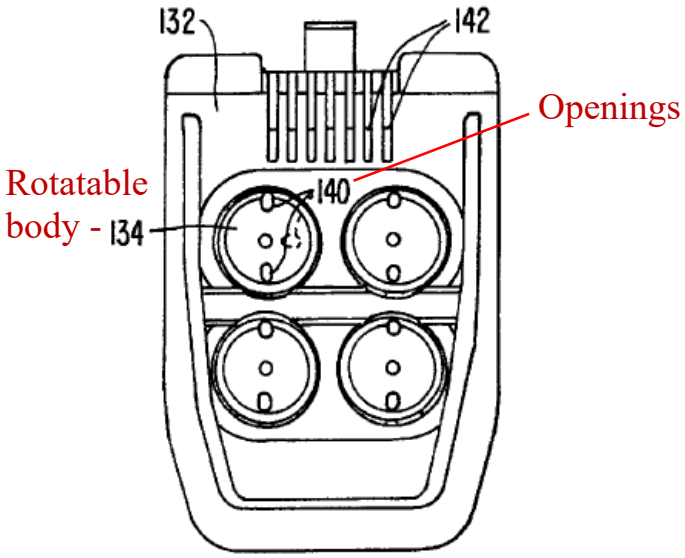

FIG. 7C.

[1.5] a transmission assembly in operable engagement with said driven element and in meshing engagement with a corresponding one of said at least one gear-driven portions to apply actuation motions thereto to cause said corresponding one of said at least one gear driven portions to apply at least one control motion to said closure tube assembly

Giordano in view of Wallace discloses this element. IS1005, ¶¶74-78.

"A transmission assembly"

Giordano's incorporation of Shelton discloses a transmission assembly, which includes [1] a closure transmission assembly comprising closure trigger 26 and closure yoke 86, [2] a firing transmission assembly comprising firing trigger 28, drive member 138, multiplier 136, metal drive rod 140, and firing connector 238; and/or [3] a rotational transmission assembly comprising rotating knob 60, boss 64, and closure sleeve 32. IS1005, ¶74; IS1015, 7:5-9:16, Fig. 7. The closure transmission assembly, which transmits the forces applied by a physician's hand to the closure tube assembly (*see* Ground 1, element [1.2.2]), is shown below:

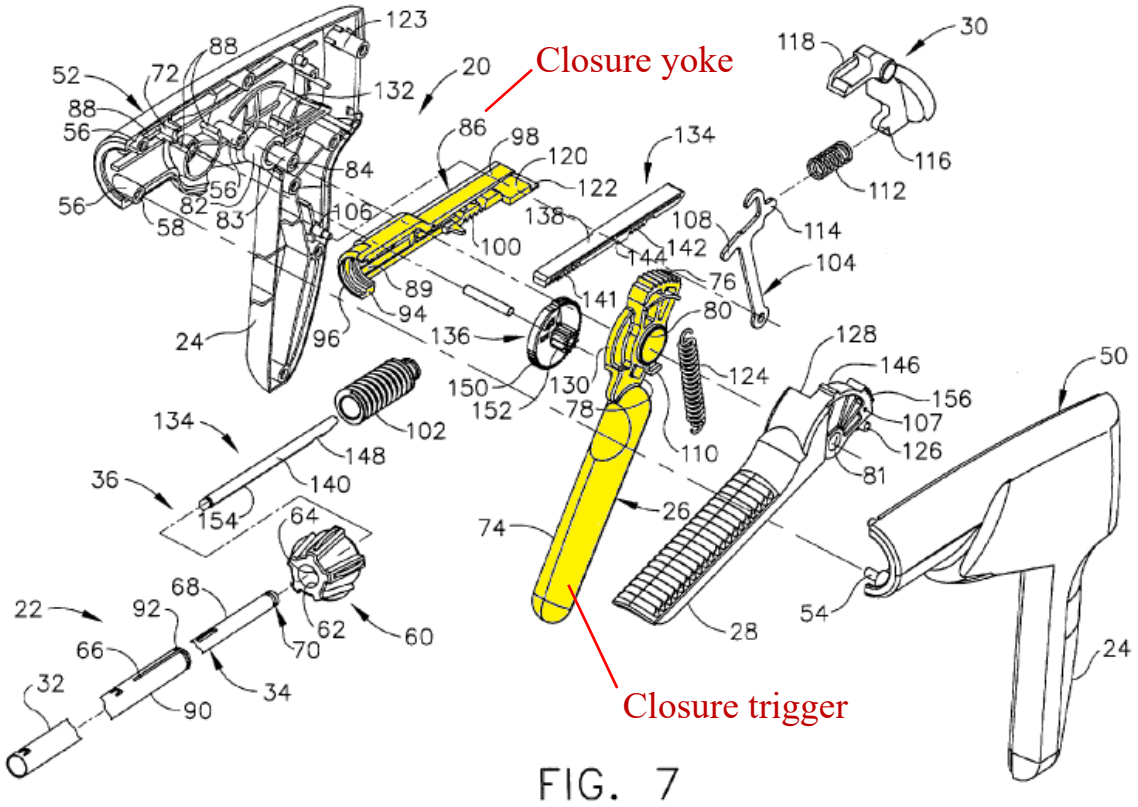

FIG. 7

In the combination of Giordano (including the incorporated Shelton instrument) and Wallace, Giordano's transmission assembly would be coupled with (and have portions replaced by) the transmission assembly of Wallace, which includes various shafts and gears, including gears 312, 400, and 420, that transmit rotary motion from the driven disks to gear-driven elements:

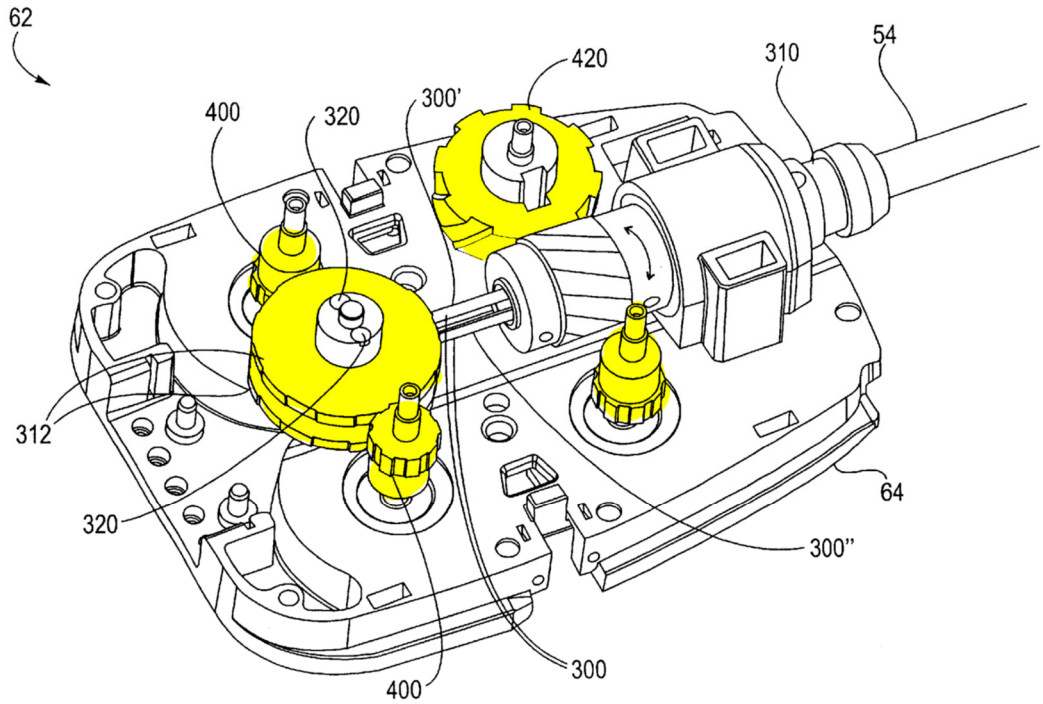

Fig. 30

IS1008, Fig. 30.

"<u>In operable engagement with said driven element</u>"

When combined with Wallace, the transmission assemblies of the Shelton/Wallace combination be driven by (and thus operably engaged with) one of Wallace's driven elements 118. IS1005, ¶76; IS1008, 13:66-14:2, Fig. 30; *see also* Ground 1, element [1.4], claim [2].

"<u>In meshing engagement with a corresponding one of said at least one gear-driven portions</u>"

Closure trigger 26 in the Shelton stapler includes a gear segment section 76 that is in meshing engagement with one of the at least one gear driven portions (*i.e.*, yoke 86). IS1005, ¶77. Specifically, "proximal end 98 of the yoke 86 has a gear rack 100 that is engaged by the gear segment section 76 of the closure trigger 26." IS1015, 7:60-62, Fig. 7. Thus, when the Shelton stapler is further combined with Wallace (wherein the closure trigger of the Shelton stapler is powered by a driven element of Wallace), the resulting motor powered gear segment section 76 (gear 400 of Wallace) would remain in meshing engagement with yoke 86. IS1005, ¶77.

"<u>To apply actuation motions [to said corresponding one of said at least one gear driven portions] to cause said corresponding one of said at least one gear driven portions to apply at least one control motion to said closure tube assembly</u>"

In Shelton, closure trigger 26 also applies actuation motions (*i.e.*, the rotational motion of the closure trigger 26) to the at least one gear driven portion

(*i.e.*, yoke 86) to apply at least one control motion (*e.g.*, distal motion) to the corresponding closure tube assembly. IS1005, ¶78; IS1015, 762-66, Fig. 7. Thus, when the Shelton stapler is combined with Wallace, gear segment section 76 (now powered by a driven element and a "gear 400" of Wallace) would continue to apply at least one control motion to the corresponding closure tube assembly. IS1005, ¶78.

[2] The surgical tool of claim 1 wherein another one of said at least one gear driven portions comprises a tube gear segment on a proximal end portion of said closure tube assembly that is in operable engagement with said transmission assembly.

Giordano in view of Wallace discloses this element. IS1005, ¶¶79-80. In Giordano, the closure tube ("closure sleeve 32") of Shelton (incorporated into Giordano) would extend the length of the Shelton/Wallace elongated shaft assembly. On the proximal end of the closure tube is a rotational knob 60, which is used to rotate the closure tube ("closure sleeve 32") and elongated shaft. IS1015, 7:16-27, Fig. 7. Knob 60 includes a protruding boss 64 to couple the knob to the closure tube: "The protruding boss 64 is received within a longitudinal slot 66 formed at a proximal portion of the closure sleeve 32 such that rotation of the rotating knob 60 effects rotation of the closure sleeve 32." IS1015, 7:20-23.

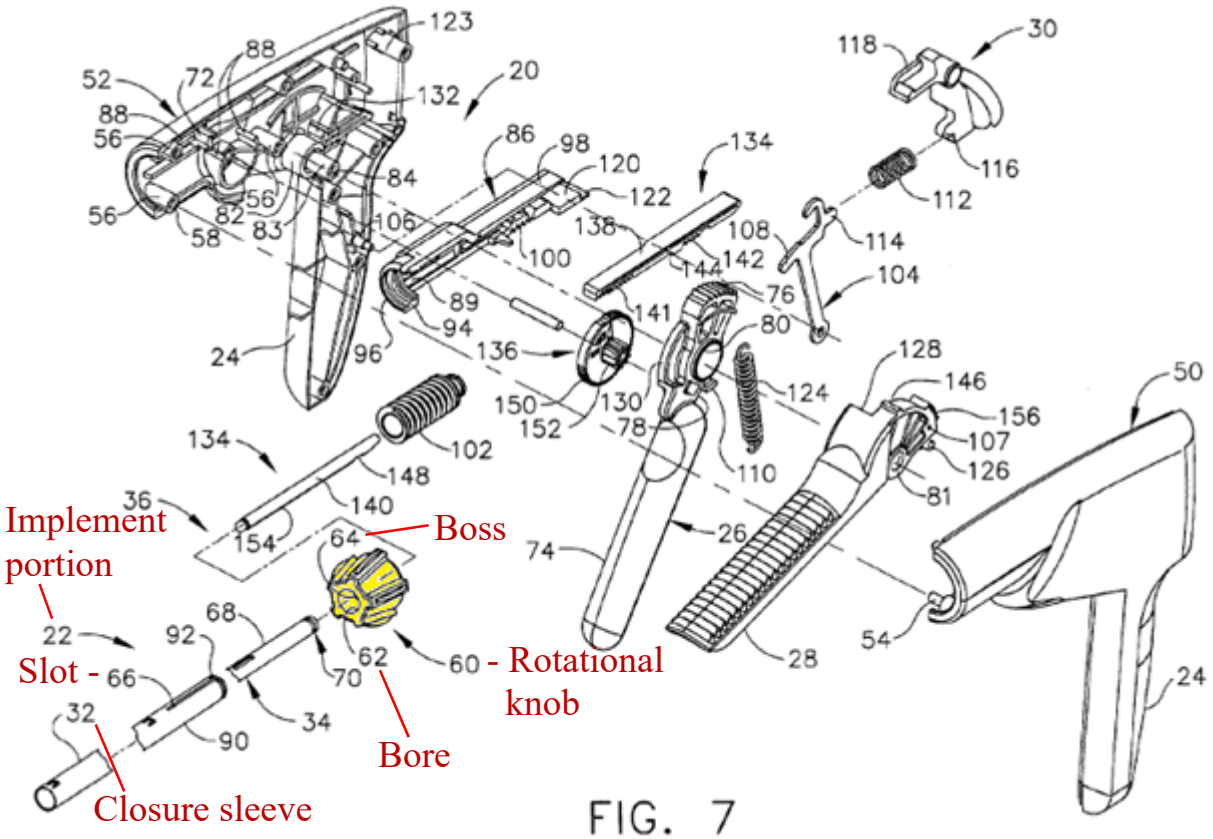

FIG. 7

In Shelton, the rotational knob is manually operated by the user. However, in the combination of Giordano (incorporating Shelton) and Wallace, the manually operated rotational knob would be replaced by the tube gear of Wallace to rotate the elongated shaft assembly (including closure tube). It would have been obvious to a POSITA in view of Wallace to replace manually operated knob 60 with a gear driven tube gear rotated by the transmission assembly of the robotic system. IS1005, ¶80. Specifically, Wallace discloses a gear driven tube gear (the helical gear on roll pulley 310) on the proximal end portion of the elongated shaft 54 that is in operable engagement with the transmission assembly (the gear 420 portion of the transmission assembly). IS1005, ¶80. Indeed, "gear 420 . . . rotates the roll

pulley 310, as indicated by a curved arrow. [And] [t]he roll pulley 310 rotates the shaft 54 around its central axis 51." IS1008, 13:66-14:2, Fig. 30.

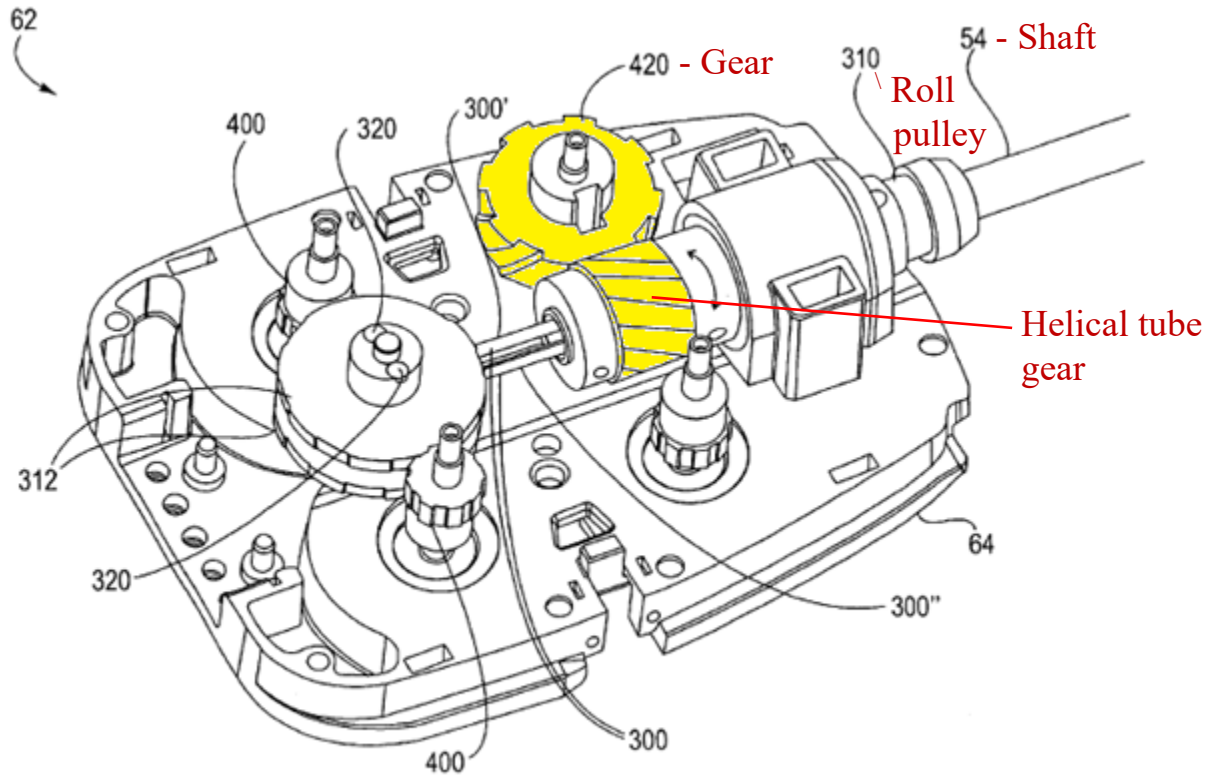

Fig. 30

A POSITA would have been motivated to modify the Shelton stapler disclosed in Giordano for use with the robotic system disclosed in Wallace for the reasons explained above. *See* Ground 1, element [1.P]. A POSITA would have recognized that the knob in Shelton and the tube gear in Wallace serve the same function of rotating the shaft and end effector and are located in the same place—in the proximal portion of the shaft.

[3] The surgical tool of claim 2 wherein said transmission assembly comprises a closure transmission assembly comprising a closure sled movably supported on

said tool mounting portion and operably supporting said proximal end portion of said closure tube assembly thereon, said closure sled configured for meshing engagement with a closure gear assembly operably coupled to one of the at least one rotatable body portions supported on the tool drive assembly such that upon application of a rotary output motion in a first direction to said closure gear assembly by said at least one rotatable body portion, said closure tube assembly is driven distally on said spine assembly into closing engagement with said anvil to move said anvil from said first open position to one of said second closed positions and upon application of said rotary output motion in a second direction to said closure gear assembly, said closure tube assembly is driven proximally on said spine assembly to enable said anvil to move to said first open position.

Giordano in view of Wallace discloses this element. IS1005, ¶¶81-87.

"A closure transmission assembly comprising a closure sled"

Giordano's incorporation of Shelton discloses a closure transmission assembly (*see* Ground 1, element [1.5]) in the Shelton stapler, which comprises a closure sled (*i.e.*, yoke 86). IS1005, ¶81; IS1015, 7:51-53, Fig. 7.

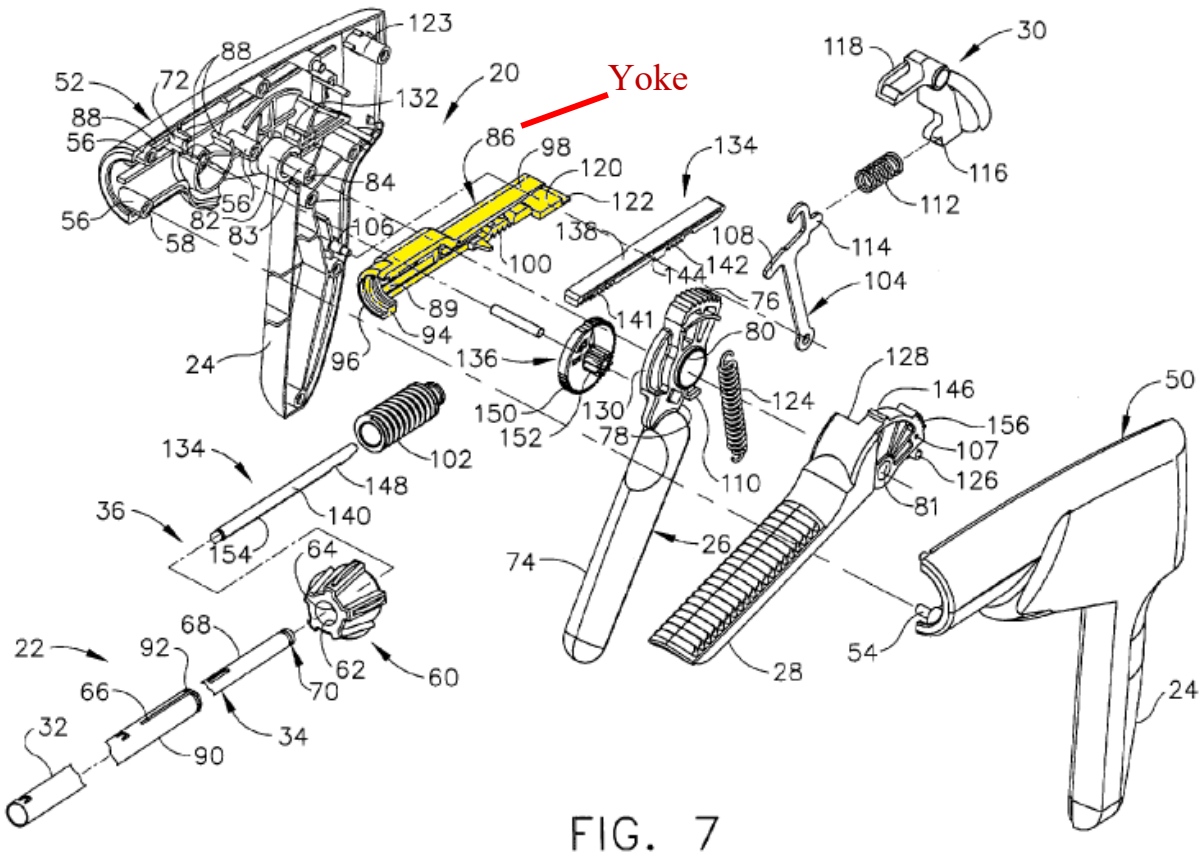

FIG. 7

"Movably supported on said tool mounting portion"

Yoke 86 is "housed within the handle portion 20 [of the Shelton stapler] for reciprocating movement therein . . . ." IS1015, 7:51-57; *see also* 7:62-66. And "[s]upport members 88 . . . support the yoke 86 within the handle portion 20." IS1015, 7:51-57; Fig. 7. When combined with Wallace, yoke 86 would be movably supported on Wallace's tool mounting portion (*i.e.*, tool base 62 or proximal housing 108) because the handle portion 20 of the Shelton stapler would be replaced by the tool mounting portion of Wallace and the transmission assembly

components in the handle portion 20 of the Shelton stapler would be moved to the tool mounting portion of Wallace. IS1005, ¶82.

"Operably supporting said proximal end portion of said closure tube assembly thereon"

Yoke 86 operably supports the proximal end portion of the closure tube assembly (*e.g.*, the combination of closure sleeve 32, flange 92, and tab 234) thereon. IS1005, ¶83. Specifically, a "proximal end 90 of the closure sleeve 32 is provided with a flange 92 that is snap-fitted into a receiving recess 94 formed in a distal end 96 of the yoke 86." IS1015, 7:58-60, Fig. 7.

"Configured for meshing engagement with a closure gear assembly operably coupled to one of the at least one rotatable body portions supported on the tool drive assembly"

The gear rack 100 portion of yoke 86 is configured for meshing engagement with a closure gear assembly (*i.e.*, closure trigger 26; specifically, the gear segment section 76). IS1005, ¶84; IS1015, 7:60-62, Fig. 7.

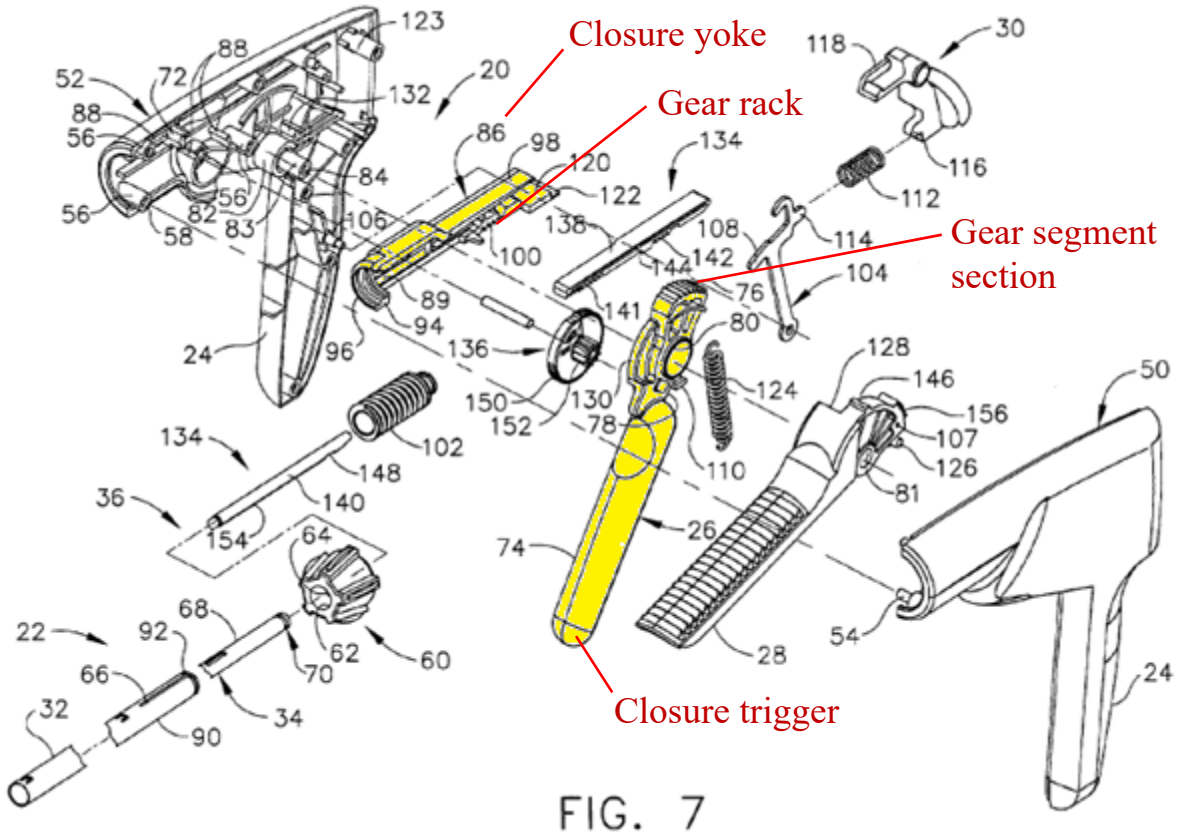

FIG. 7

When combined with Wallace, this closure gear assembly, with gear 400 of Wallace replacing gear segment section 76, would be driven by, and therefore operably coupled to, one of the rotatable body portions ("rotatable bodies 134") supported on Wallace's tool drive assembly instead of the physician's hand. IS1005, ¶85.

"<u>Upon application of a rotary output motion in a first direction to said closure gear assembly by said at least one rotatable body portion, said closure tube assembly is driven distally on said spine assembly into closing engagement with said anvil to move said anvil from said first open position to one of said second closed positions</u>"

"When the closure trigger 26 [of the Shelton stapler] is moved toward the pistol grip 24 of the handle portion 20, the yoke 86 and, hence, the closure sleeve 32 move distally . . . . Distal movement of the closure sleeve 32 effects pivotal translation movement of the anvil 18 distally and toward the elongate channel 16 of the end effector 12 and proximal movement effects closing . . . ." IS1015, 7:62-8:8. Thus, when the Shelton stapler is combined with Wallace's robotic system, application of a rotary output motion in a first direction to the closure gear assembly ("gear segment section 76" of Shelton replaced by gear 400 of Wallace, which is driven by one of the driven elements 118 and rotatable body portions 134 of Tierney), would drive the closure tube assembly (*see* Ground 1, element [1.2.2]) distally on the spine assembly (*see* Ground 1, element [1.2.1]) into closing engagement with anvil 18 to move anvil 18 from the first open position to one of the second closed positions. IS1005, ¶86.

"<u>Upon application of said rotary output motion in a second direction to said closure gear assembly, said closure tube assembly is driven proximally on said spine assembly to enable said anvil to move to said first open position</u>"

Similarly, application of the rotary output motion in a second direction by one of the rotatable body portions ("rotatable bodies 134") to the closure gear assembly would drive the closure tube assembly proximally on the spine assembly

to enable anvil 18 to move to the open position. IS1005, ¶87; *see also* IS1015, 8:36-38.

[4] The surgical tool of claim 1 further comprising a cutting instrument that is axially movable within said surgical staple cartridge between a starting position and an ending position.

Giordano discloses this element. IS1005, ¶88. Giordano's incorporation of Shelton discloses a cutting instrument (cutting edge 48) in the Shelton stapler. IS1005, ¶88; IS1015, 6:42-45, Figs. 2-4, 11. And cutting edge 48 is axially movable within the surgical staple cartridge 37 between a starting (*i.e.*, proximal) position and an ending (*i.e.*, distal) position. *Id*. Specifically, the "cutting edge 48 . . . traverses through a proximally presented, vertical slot 49 in the cartridge to sever clamped tissue." *Id*.

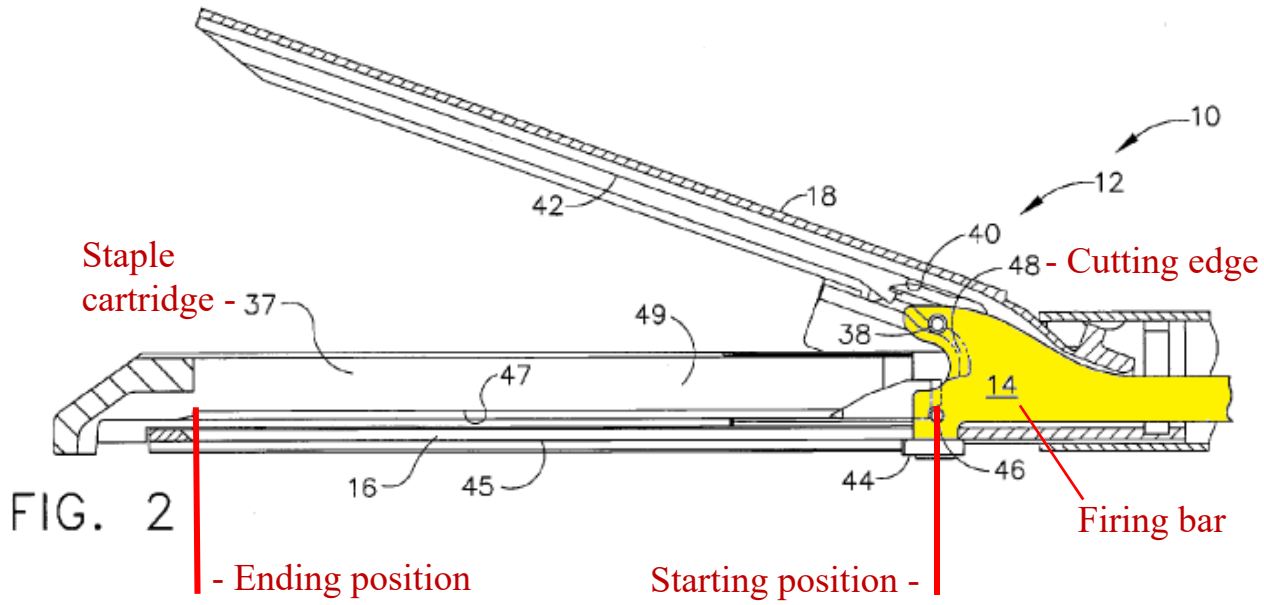

FIG. 2

[5] The surgical tool of claim 4 wherein another one of said at least one gear driven portion comprises a knife bar that is movably supported within said

elongated shaft assembly for selective axial travel therein, said knife bar interfacing with said cutting instrument and said transmission assembly.

Giordano in view of Wallace discloses this element. IS1005, ¶89.

"Another one of said at least one gear driven portion comprises a knife bar"

Giordano's incorporation of Shelton discloses another gear driven portion of the Shelton stapler ("firing drive member 36") that comprises a knife bar (the combination of firing bar 14, firing connector 238, and metal drive rod 140). IS1005, ¶88. "The firing drive member 36 is shown [in Fig. 11] as being assembled from the firing bar 14 attached to a firing connector 238 by pins 240, which in turn is rotatingly and proximally attached to the metal drive rod 140." IS1015, 10:48-51, Figs. 2-4, 11. The various components that together form the recited knife bar are shown in yellow in the figure here:

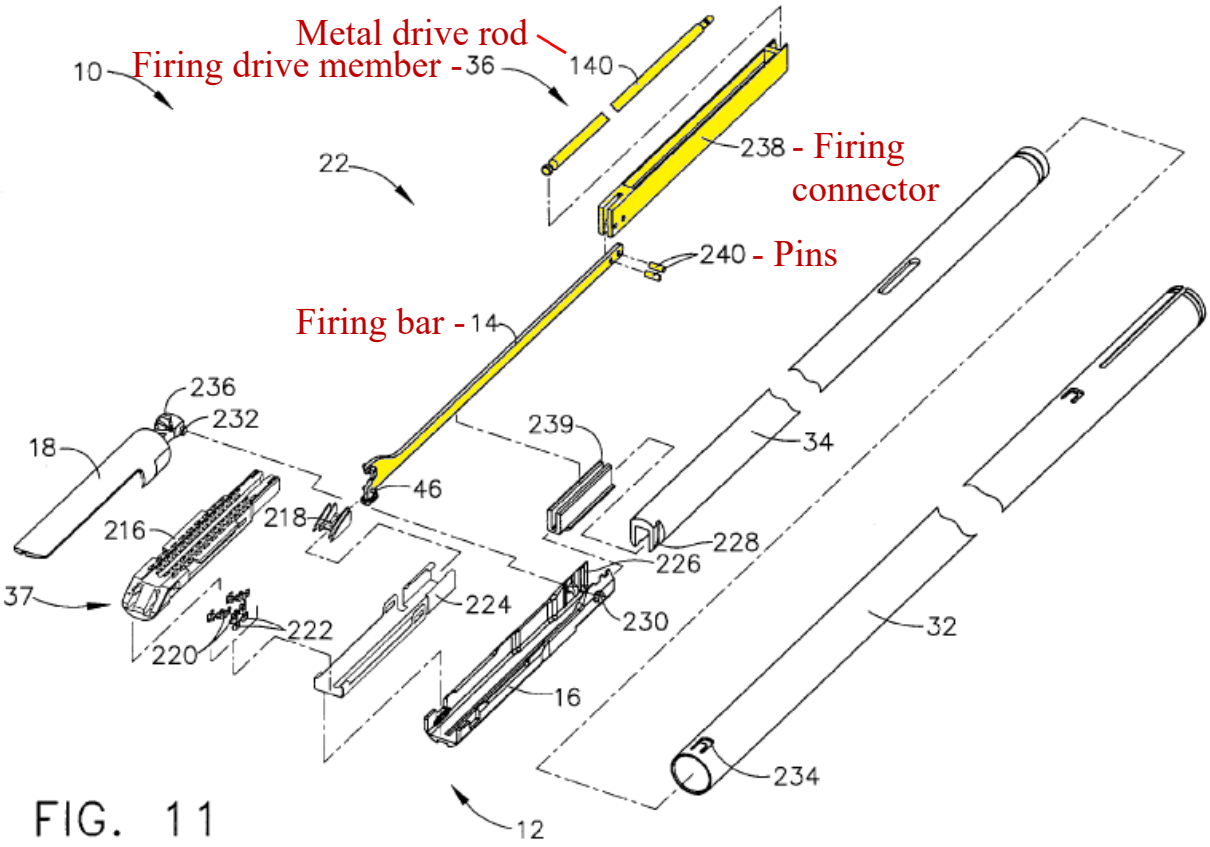

FIG. 11

Firing drive member 36 is driven by first integral pinion gear 150. IS1005, ¶90; IS1015, 9:10-12, Fig. 7. Alternatively, the claimed knife bar may include the metal drive rod 140 and firing connector 238, and the claimed cutting instrument corresponds to the firing bar 14 and its cutting edge 48. Either mapping meets the claim.

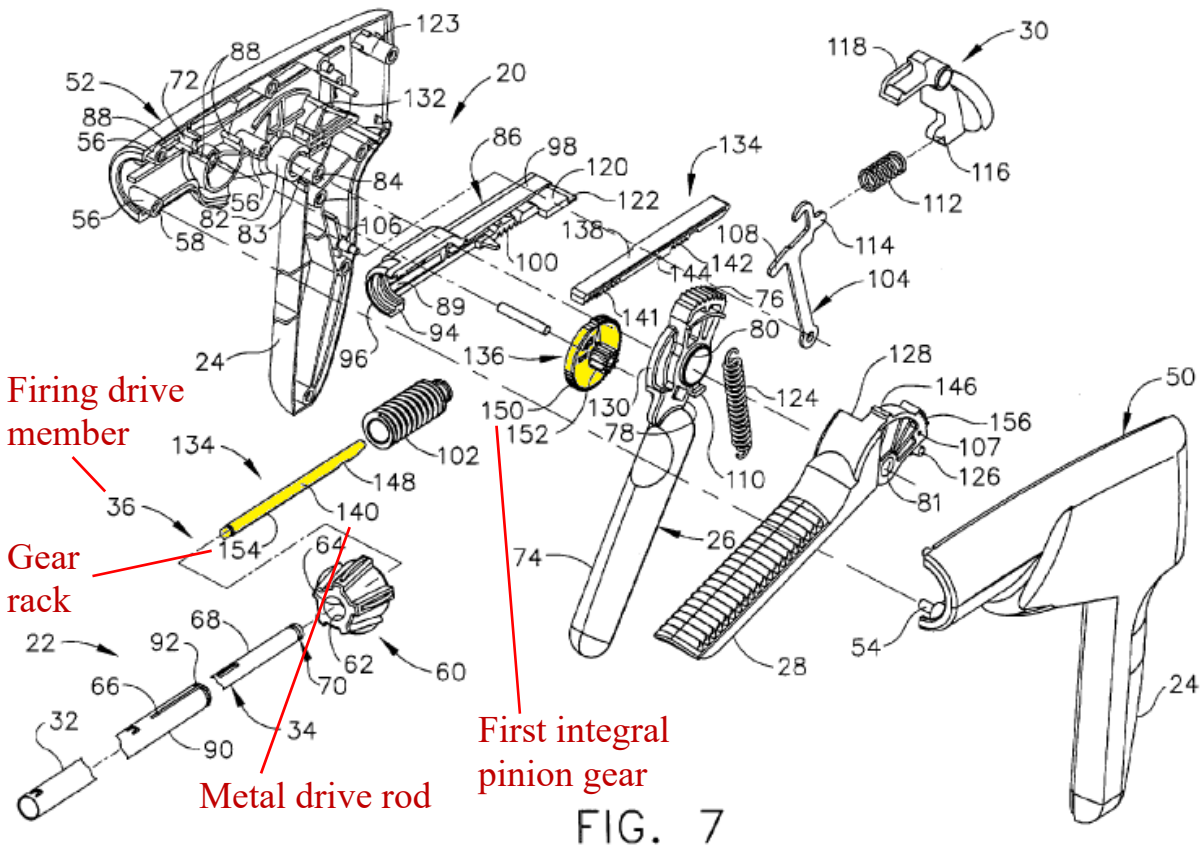

FIG. 7

"Movably supported within said elongated shaft assembly for selective axial travel therein"

Firing drive member 36 is movably supported within the frame 34 and closure sleeve 32 of the elongated shaft assembly (*see* Ground 1, elements [1.2]-[1.2.3]) for selective axial travel therein. IS1005, ¶91. Specifically, "closure sleeve 32 encloses a frame 34, which in turn encloses a firing drive member 36 . . . ." IS1015, 5:63-65. And "movement of the firing trigger 28 causes the metal drive rod 140 [of firing drive member 36] to reciprocate between a first reciprocating position, shown in FIG. 8, and a second reciprocating position, shown in FIG. 9."

IS1015, 9:34-50; *see also* 10:52-53, 11:58-60, Figs. 8, 9, 11. Thus, when the Shelton stapler is combined with Wallace's robotic system, movement of the tool drive assembly would cause the reciprocation of the metal drive rod 140. IS1005, ¶91.

"Interfacing with said cutting instrument and said transmission assembly"

The firing bar 14 portion of firing drive member 36 interfaces with the cutting instrument ("cutting edge 48"). IS1005, ¶92; IS1015, 6:42-45, Fig. 3. Alternatively, if the claimed "knife bar" is mapped onto the firing drive member 36 (and its metal drive rod 140 and firing connector 238), then the entire firing bar including cutting ege 48 may be considered the claimed "cutting instrument."

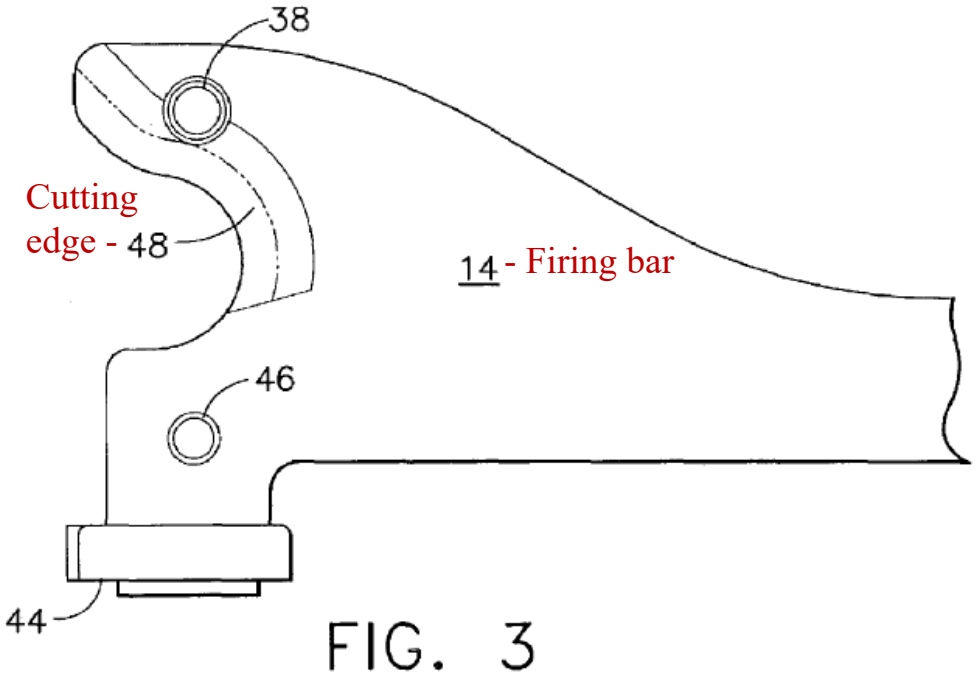

And, as shown below, gear rack 154 on the metal drive rod 140 portion of firing drive member 36 interfaces with the transmission assembly (including "first pinion gear 150" of the firing transmission).

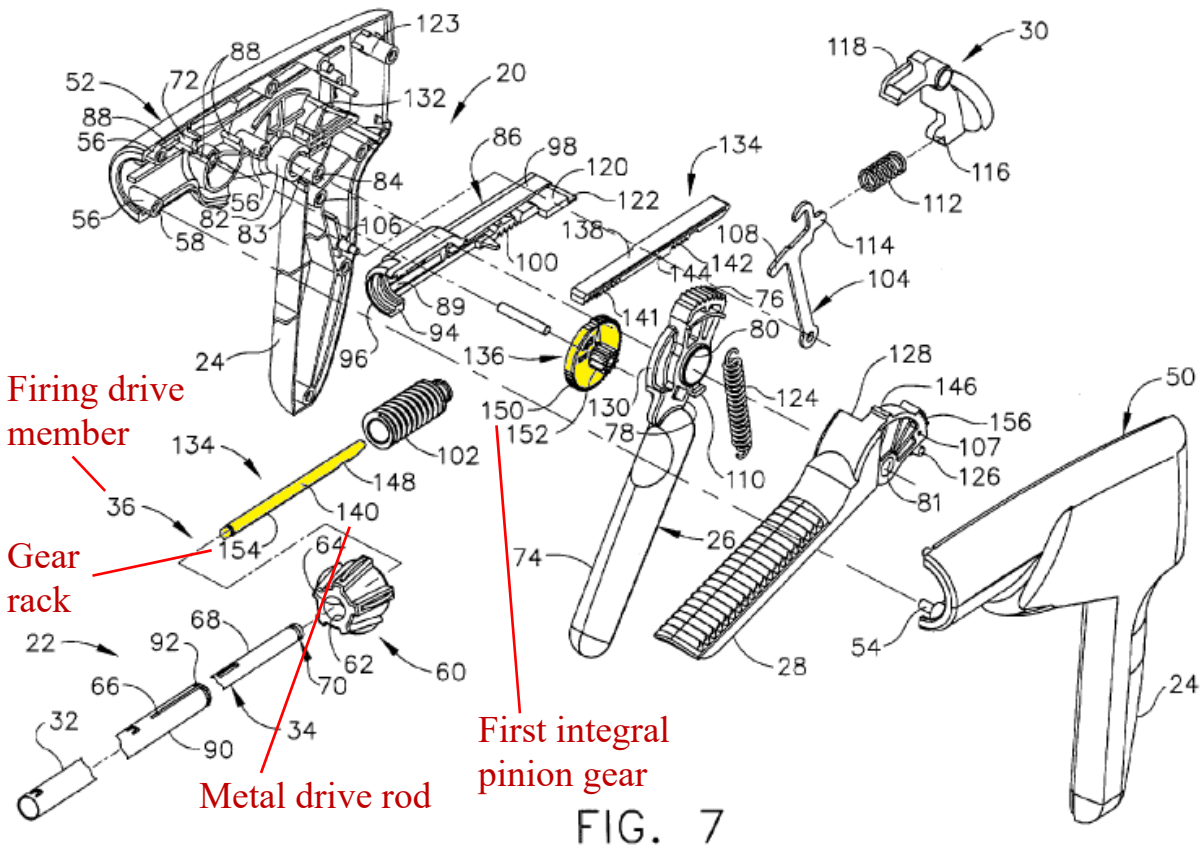

[6] The surgical tool of claim 5 wherein said knife bar has a knife gear rack formed on a proximal end thereof and wherein said transmission assembly comprises a knife transmission assembly comprising a knife gear assembly in meshing engagement with said knife gear rack, said knife gear assembly operably coupled to one of the at least one rotatable body portions supported on the tool drive assembly such that upon application of a rotary output motion in a first direction to said knife gear assembly by said at least one rotatable body portion, said knife bar drives said cutting instrument distally through said surgical staple cartridge and upon application of said rotary output motion in a second direction to said knife gear assembly, said knife bar moves said cutting instrument proximally through said surgical staple cartridge.

Giordano in view of Wallace discloses this element. IS1005, ¶¶93-95.

"Said knife bar has a knife gear rack formed on a proximal end thereof"

The Shelton stapler's knife bar (*see* Ground 1, claim [5]) has a knife gear rack (*i.e.*, gear rack 154) formed on a proximal end (on the "metal drive rod 140" portion) thereof. IS1005, ¶93; IS1015, 9:11-12, Figs. 7, 11.

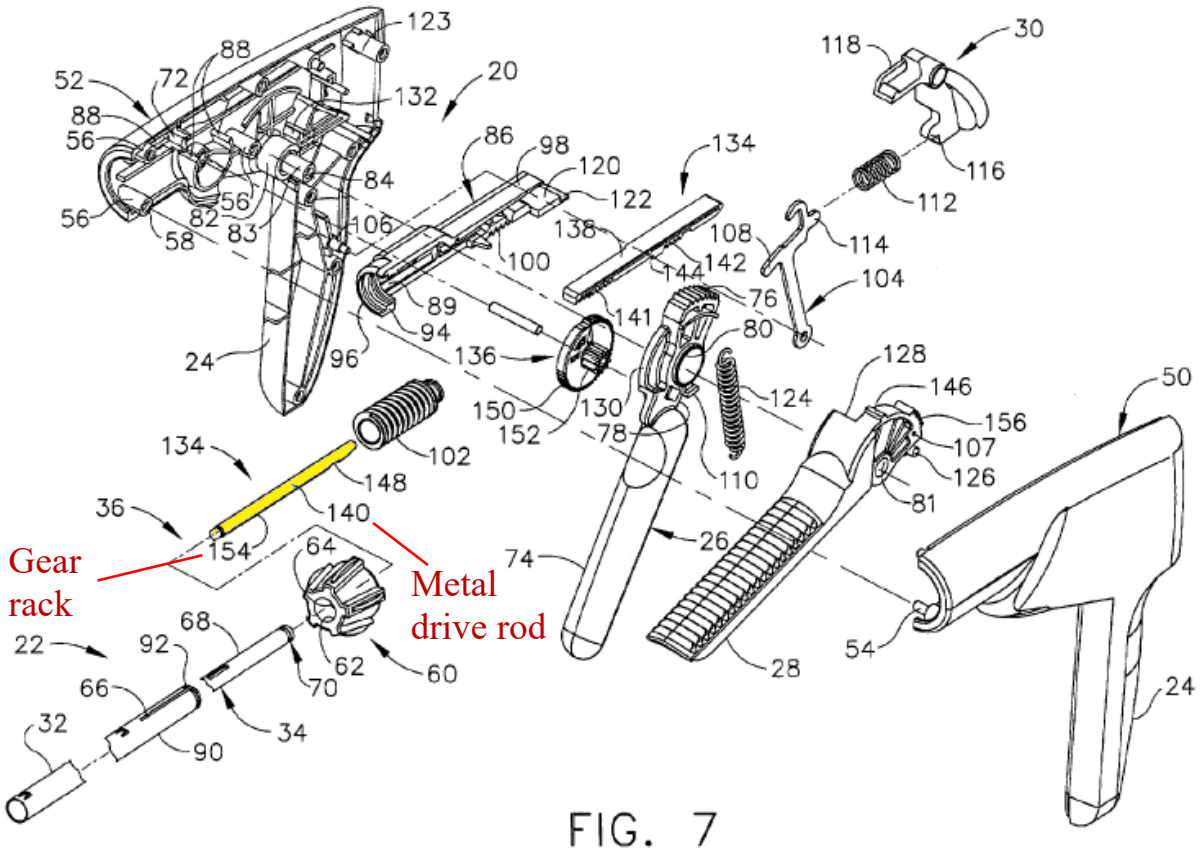

FIG. 7

"Said transmission assembly comprises a knife transmission assembly comprising a knife gear assembly in meshing engagement with said knife gear rack"

The Shelton stapler's transmission assembly (*see* Ground 1, element [1.5]) includes a knife transmission assembly comprising a knife gear assembly (for

example, multiplier 136, drive member 138, and gear segment section 156 of firing trigger 28) in meshing engagement with the knife gear rack ("first gear rack 154"). IS1005, ¶94. Specifically, "multiplier 136 comprises first . . . integral pinion gear[] 150 [that] is engaged with a first gear rack 154 provided on the metal drive rod 140" portion of the Shelton stapler's knife gear rack. IS1015, 9:9-12, Figs. 6-7.

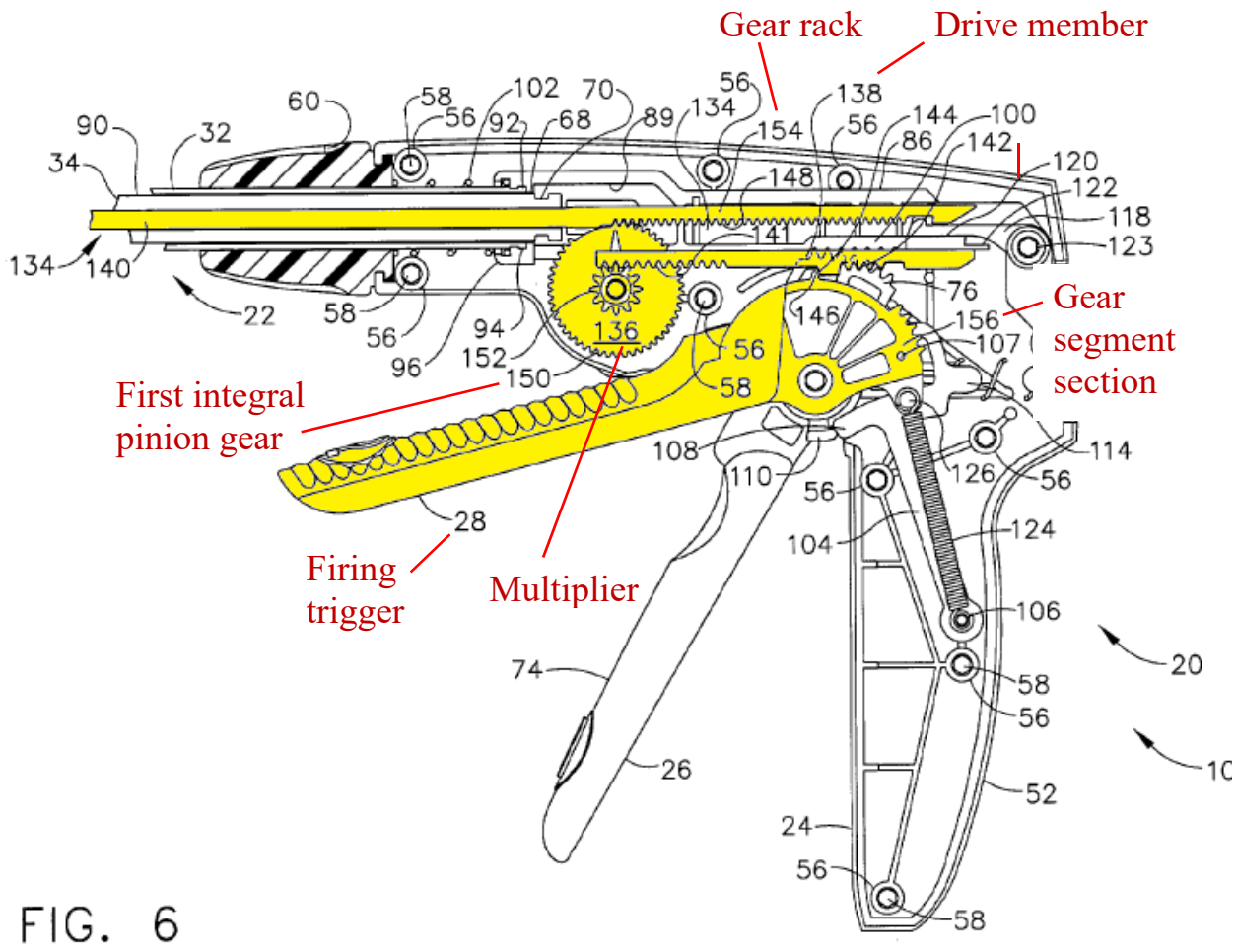

FIG. 6

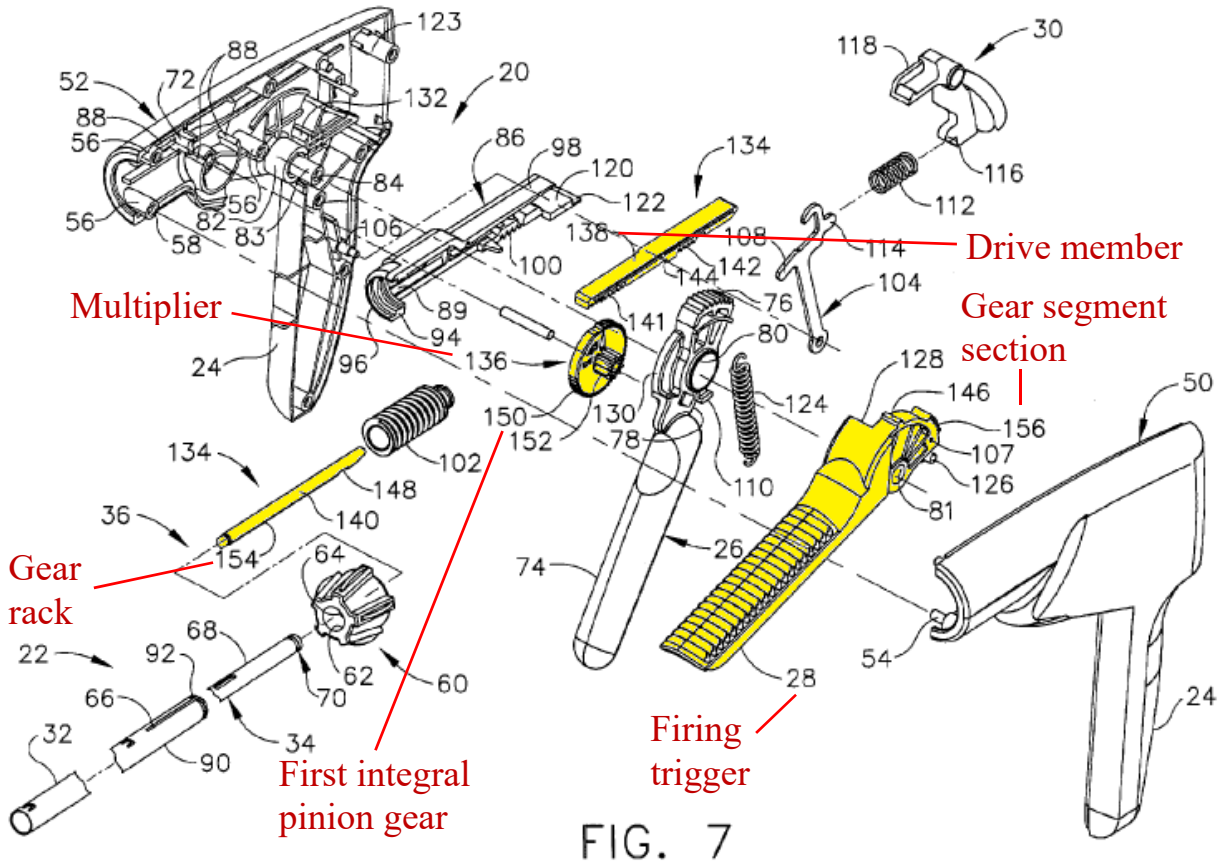

FIG. 7

"Said knife gear assembly operably coupled to one of the at least one rotatable body portions supported on the tool drive assembly such that upon application of a rotary output motion in a first direction to said knife gear assembly by said at least one rotatable body portion, said knife bar drives said cutting instrument distally through said surgical staple cartridge and upon application of said rotary output motion in a second direction to said knife gear assembly, said knife bar moves said cutting instrument proximally through said surgical staple cartridge"

When combined with Wallace's robotic system, as described above, the Shelton stapler's knife gear assembly would be driven by, and therefore be operably coupled to, one of Wallace's rotatable body portions supported on the tool drive assembly instead of a physician's hand. IS1005, ¶95; *see also* Ground 1, elements [1.P], [1.4]. Thus, application of a rotary output motion in a first direction (*e.g.*, clockwise) to the Shelton stapler's knife gear assembly by the at least one rotatably body portion of Wallace's robotic system would cause firing drive member 36 and firing bar 14 to drive the cutting instrument ("cutting edge 48") distally through the surgical staple cartridge 37. IS1005, ¶95; 11:57-12:3. Similarly, application of the rotary output motion in a second direction (*e.g.*, counter-clockwise) to the knife gear assembly would cause firing drive member 36 and firing bar 14 to move the cutting instrument (*i.e.*, cutting edge 48) in the opposite direction (*e.g.,* proximally) through surgical staple cartridge 37. IS1005, ¶95.

[7.P] The surgical tool of claim 4 wherein said cutting instrument comprises:

See Ground 1, claim [4].

[7.1] a rotary end effector drive shaft operably supported within the elongated channel

Giordano in view of Wallace discloses this element. IS1005, ¶¶97-102. It would have been obvious in view of Giordano to modify the Shelton stapler to include a rotary end effector drive shaft operably supported within the elongated

channel. *Id*. Giordano discloses a rotary firing mechanism that includes, among other things, a rotary drive transmission, rotary drive shafts, and an end effector. *See, e.g.*, IS1005, ¶97; IS1014, Figs. 3-10. The rotary drive transmission is shown below in Fig. 7 of Giordano.

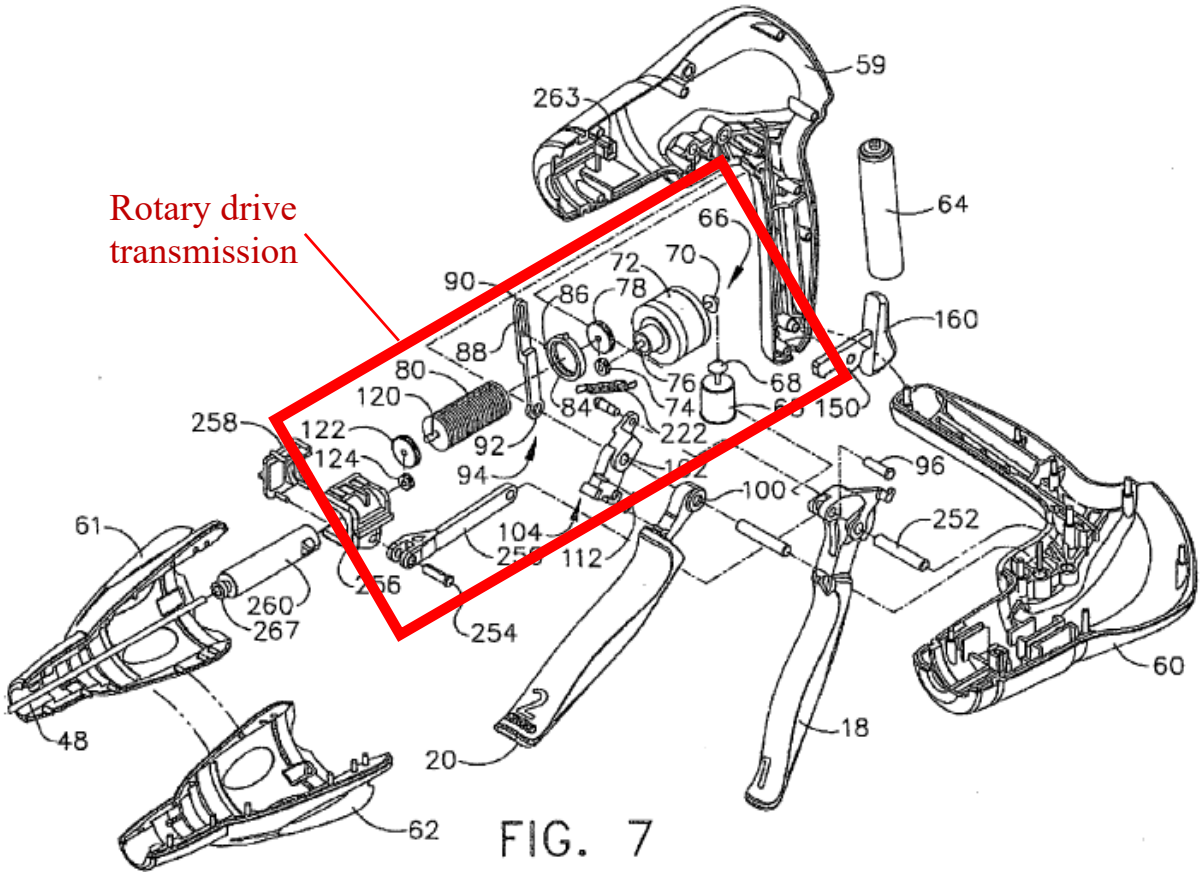

FIG. 7

And the drive shafts and end effector of Giordano's rotary firing mechanism are shown below in Fig. 5 of Giordano.

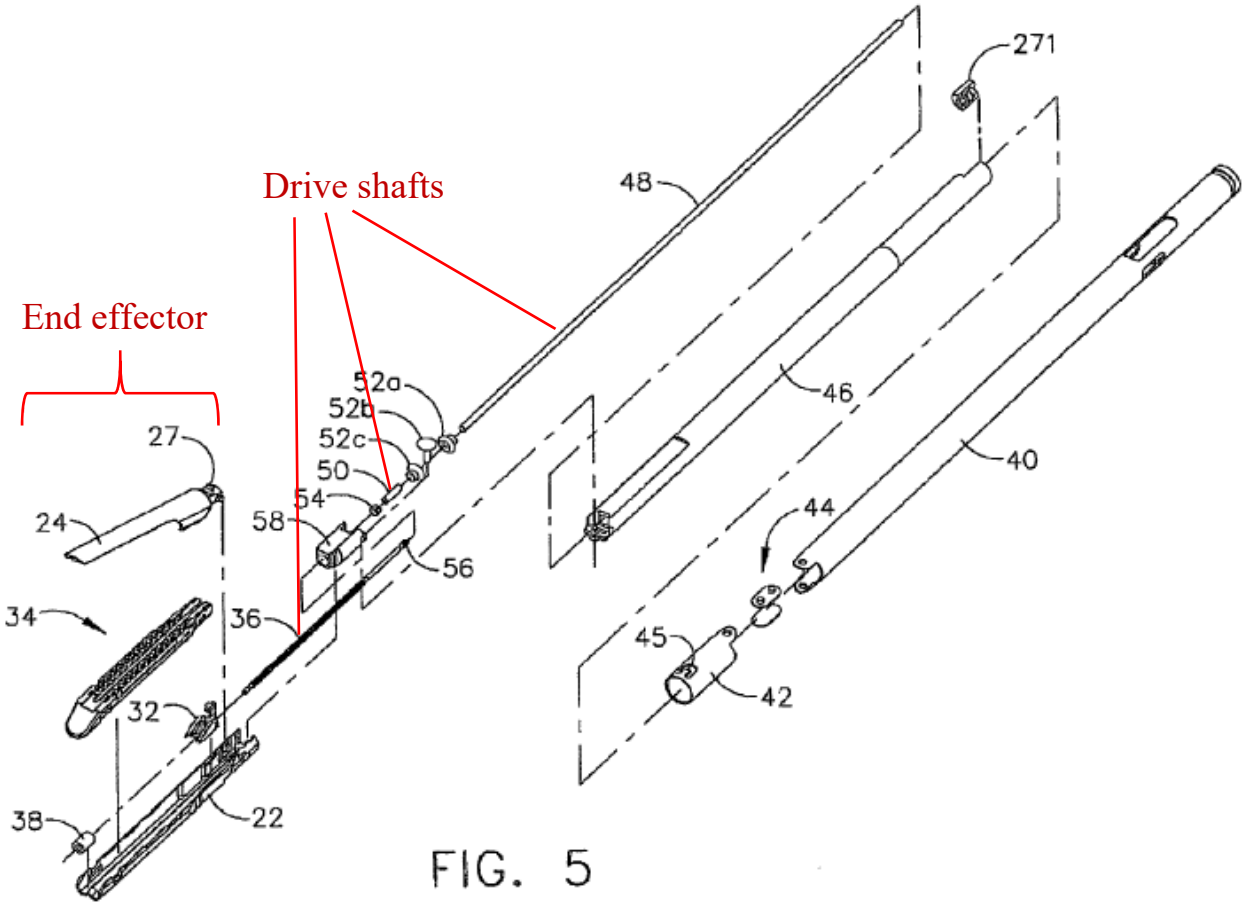

FIG. 5

As shown in Fig. 5 above and Fig. 3 below, Giordano's rotary firing mechanism includes a rotary end effector drive shaft ("helical drive screw 36") that is operably supported within an elongated channel ("staple channel 22"). IS1005, ¶99. Specifically, a "bearing 38, positioned at a distal end of the staple channel 22, receives the helical drive screw 36, allowing the helical drive screw 36 to freely rotate with respect to the channel 22." IS1014, ¶42, Fig. 3.

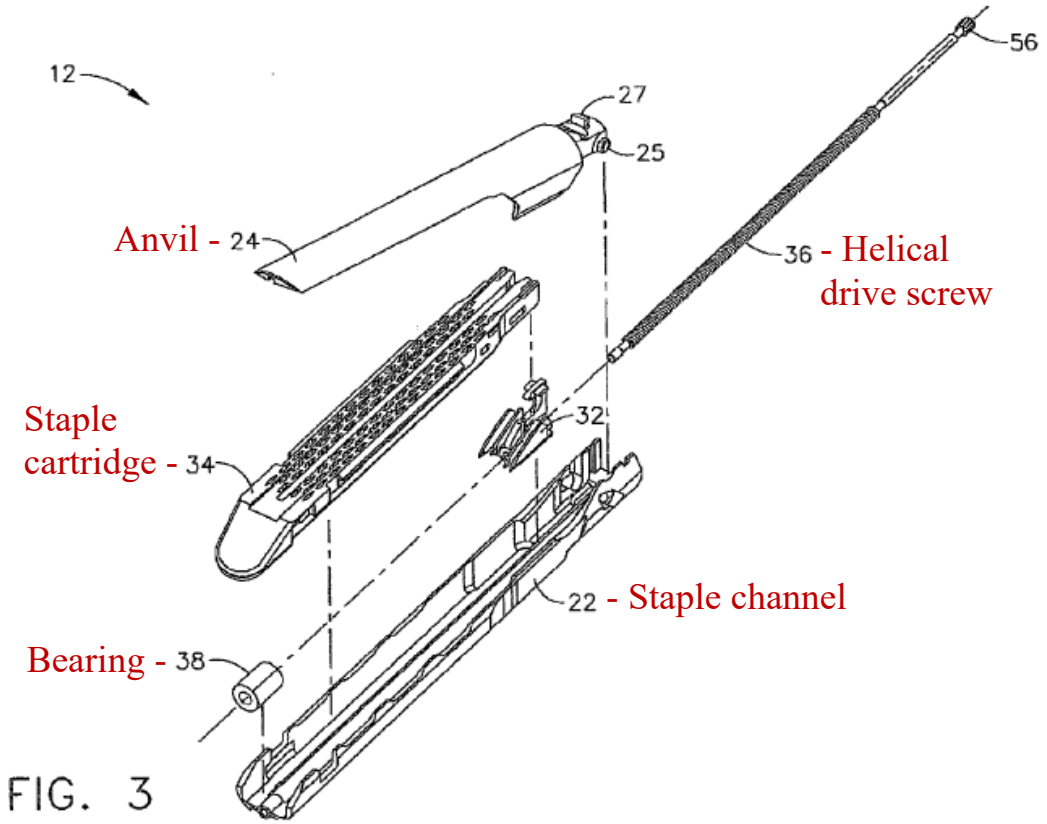

FIG. 3

When combined with the Shelton stapler, end effector 12 would be the "surgical end effector" in element [1.1]. IS1005, ¶100. Staple channel 22, which operably supports staple cartridge 34, would be the "elongated channel" in element [1.1.1]. *Id*. And anvil 24, which "may be pivotably opened and closed at a pivot point 25 connected to the proximate end of the channel 22," would be the "anvil" in element [1.2.1]. IS1014, ¶39; *see also* ¶36, Figs. 1-2; IS1005, ¶100.

A POSITA would have been motivated to add Giordano's rotary firing mechanism to the Shelton stapler to obtain the benefits of such a mechanism, including the "power assist" feature with increased torque. Giordano teaches that its rotary firing mechanism "aids in the firing of the instrument" and addresses the

need to "lower force-to-fire (FTF) to a level that all or a great majority of surgeons can handle." IS1014, ¶¶12, 13; IS1005, ¶101.

More generally, a POSITA would have been motivated to add Giordano's rotary firing mechanism to the Shelton stapler because Giordano explicitly directs a POSITA to Shelton, which "provides more details about such two stroke cutting and fastening instruments." IS1014, ¶39; IS1005, ¶101. Giordano also teaches that "[a]lthough the present invention has been described herein in connection with certain disclosed embodiments, many modifications and variations to those embodiments may be implemented. . . . The foregoing description and following claims are intended to cover all such modification and variations." IS1014, ¶90; *see also* IS1015, 12:15-21.

A POSITA would have been further prompted to modify the Shelton stapler for use with Giordano's rotary firing mechanism because doing so would be merely the application of a known technique (use of a rotary firing mechanism) to a known system (a surgical stapler) ready for improvement to yield predictable results without significantly altering or hindering the functions performed by the Shelton stapler. IS1005 at ¶102; *KSR,* 550 U.S. at 417.

Finally, it would have been obvious, in view of Wallace, to adapt the resulting device (*i.e.*, the Shelton stapler with Giordano's rotary firing mechanism) for use with a surgical robotic system for the same reasons it would have been

obvious to modify the Shelton stapler for use with a robotic system. *See* Ground 1, element [1.P]; IS1005 at ¶102.

[7.2] a knife member having a tissue-cutting portion thereon threadedly received on said rotary end effector drive shaft such that rotation of said rotary end effector drive shaft in a first direction causes said knife member to move in a distal direction through said surgical staple cartridge and when said rotary end effector drive shaft is rotated in a second direction, said knife member moves in a proximal direction through said surgical staple cartridge.

Giordano in view of Wallace discloses this element. IS1005, ¶¶103-104.

"A knife member having a tissue-cutting portion thereon"

The Shelton stapler with Giordano's rotary firing mechanism includes a knife member (*i.e.*, knife 32) having a tissue cutting portion thereon. IS1005, ¶103; IS1014, ¶39, Fig. 3. Thus, knife 32 would be the cutting instrument in claim [4]. IS1005, ¶103.

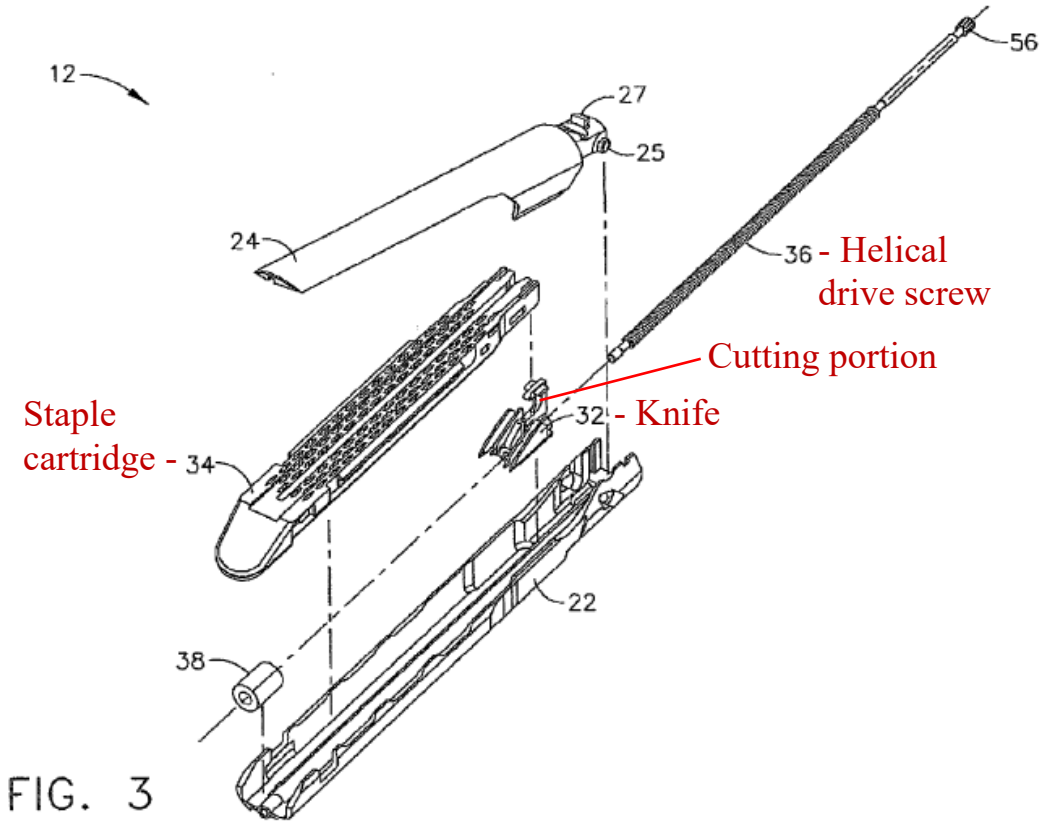

FIG. 3

"Threadedly received on said rotary end effector drive shaft such that rotation of said rotary end effector drive shaft in a first direction causes said knife member to move in a distal direction through said surgical staple cartridge and when said rotary end effector drive shaft is rotated in a second direction, said knife member moves in a proximal direction through said surgical staple cartridge"

As shown above, knife 32 is threadedly received on the rotary end effector drive shaft ("helical drive screw 36") "such that rotation of the [helical drive screw] 36 causes the knife 32 to translate distally [in a first direction] or proximately [in a second direction] (depending on the direction of the rotation) through [staple cartridge 34 in] the staple channel 22." IS1014, ¶42, Fig. 3;

IS1005, ¶104. The "knife 32 . . . travel[s] longitudinally along the channel 22 to cut any tissue clamped within the end effector." IS1014, ¶43.

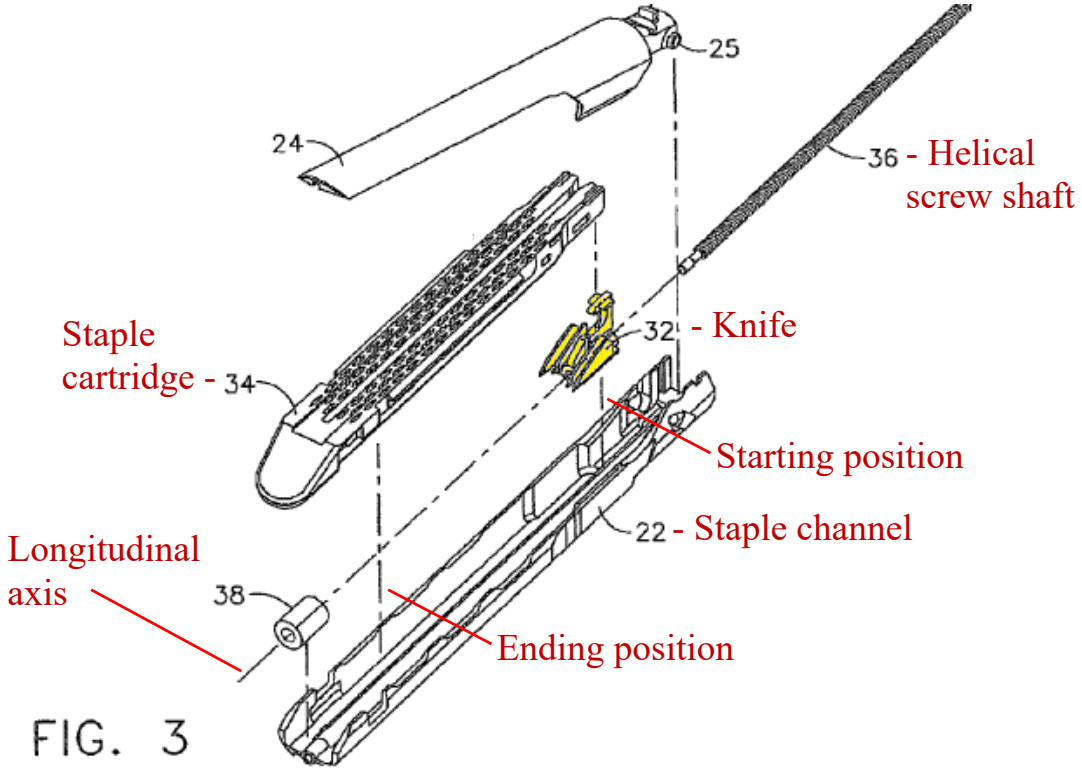

Thus, as required in claim [4], knife 32 is also axially movable (movable along the longitudinal axis) within the surgical staple cartridge 34 between a starting (proximal) position and an ending (distal) position. IS1005, ¶104.

[8.1] The surgical tool of claim 7 wherein one of said at least one gear driven portions comprises an elongated proximal drive shaft operably supported in said elongated shaft assembly and having a distal end in driving engagement with said rotary end effector drive shaft, and

Giordano in view of Wallace discloses this element. IS1005, ¶¶105-106. One of the gear driven portions (*e.g.*, the combination of rotary drive shafts) of the Shelton stapler with Giordano's rotary firing mechanism (*see* claim [7]) includes

an elongate proximal drive shaft (*e.g.*, the combination of "proximate drive shaft 48" and "distal drive shaft 50") operably supported in the elongated shaft assembly (*see* Ground 1, element [1.2]) having a distal end (the distal end of "distal drive shaft 50") that is in driving engagement with the rotary end effector drive shaft ("helical drive screw 36"). IS1005, ¶105.

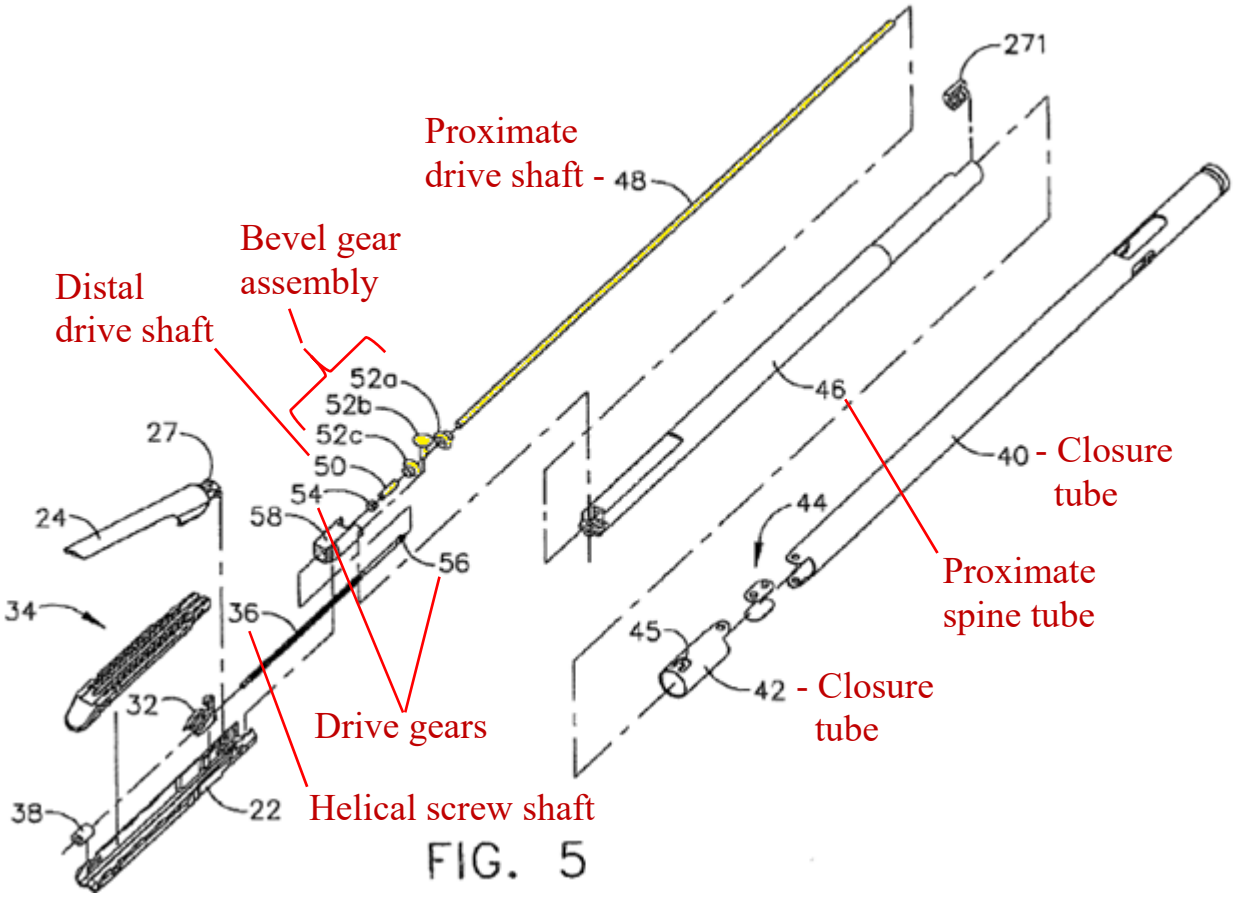

IS1014, Fig. 5. As shown above, proximate drive shaft 48 and distal drive shaft 50 are disposed inside a spine assembly, which is disposed inside a closure tube assembly. IS1014, ¶¶41, 71. "[D]rive shaft 50 is connected to a drive gear 54 that

engages a proximate drive gear 56 of the helical screw shaft 36." IS1014, ¶41, Fig. 5. And drive shaft 48 is driven by ring gear 122. IS1014, ¶46, Fig. 7. When combined with the Shelton stapler, these drive shafts would be disposed inside the Shelton stapler's spine assembly and closure tube assembly. IS1005, ¶106; *see also* Ground 1, elements [1.2.1], [1.2.2].

[8.2] wherein said transmission assembly comprises a rotary drive transmission operably supported on said tool mounting portion and in driving engagement with a proximal end of said proximal drive shaft and operably coupled to one of the at least one rotatable body portions supported on the tool drive assembly

Giordano in view of Wallace discloses this element. IS1005, ¶¶107-110.

"<u>A rotary drive transmission operably supported on said tool mounting portion</u>"

The transmission assembly of the Shelton stapler with Giordano's rotary firing mechanism includes a rotary drive transmission (*e.g.*, bevel gear assembly 66, planetary gear assembly 72, mating ring gear 78, helical gear drum 80, drive shaft 82, drive shaft 120, ring gear 122, and pinion gear 124) operably supported on the handle 6 of the device. IS1005, ¶107; IS1014, ¶¶43, 46-50, Figs. 7-10.

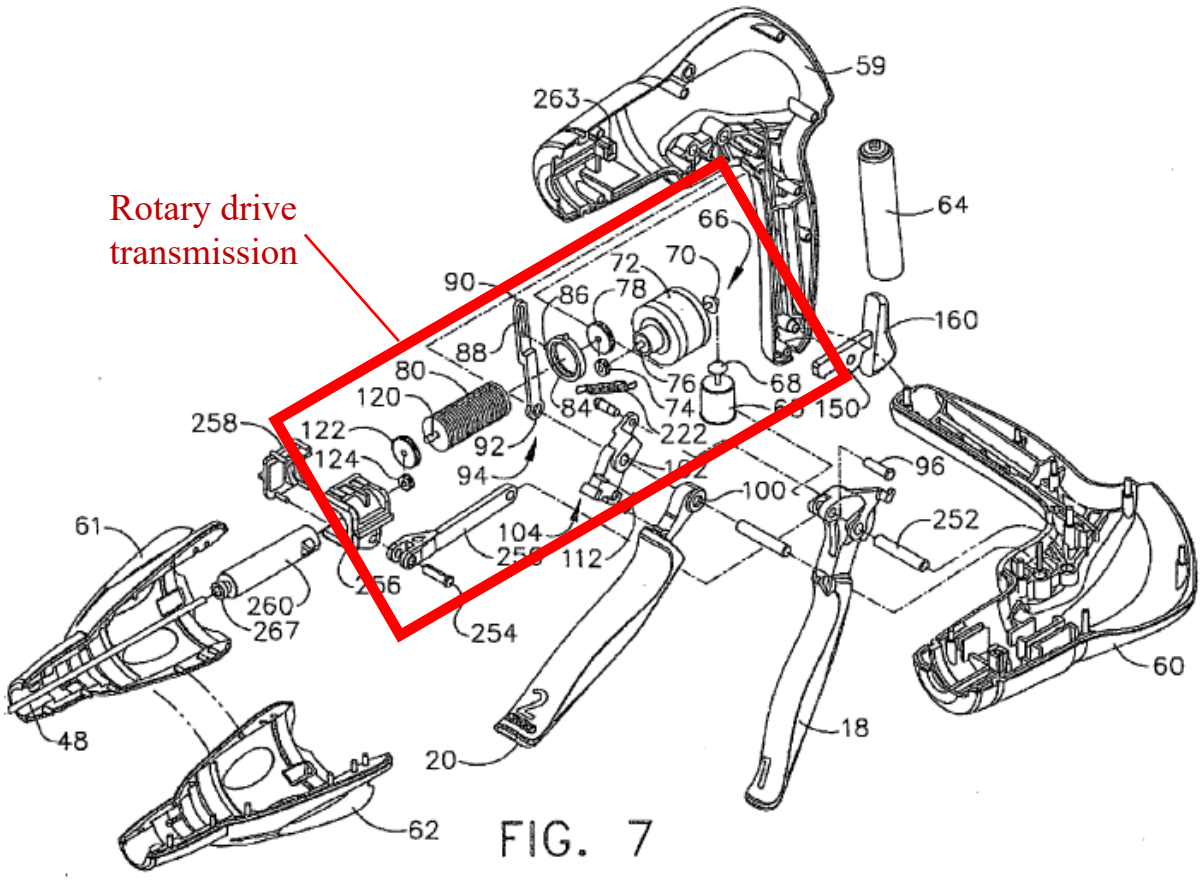

FIG. 7

When the Shelton stapler with Giordano's rotary firing mechanism is combined with Wallace's robotic system, the rotary drive transmission described above would be operably supported on the tool mounting portion of the robotic system instead of the handle of the device. IS1005, ¶108; *see also* Ground 1, elements [1.P], [1.3]-[1.5].

<u>A rotary drive transmission "in driving engagement with a proximal end of said proximal drive shaft"</u>

In the Shelton stapler with Giordano's rotary firing mechanism, the ring gear 122 portion of the rotary drive transmission is in driving engagement with a

proximal end of the proximal drive shaft (*i.e.*, drive shaft 48). IS1005, ¶109; IS1014, ¶46, Figs. 7-10. Specifically, ring gear 122 "mates with a pinion gear 124 . . . connected to the [proximal end of] main drive shaft 48." *Id.*

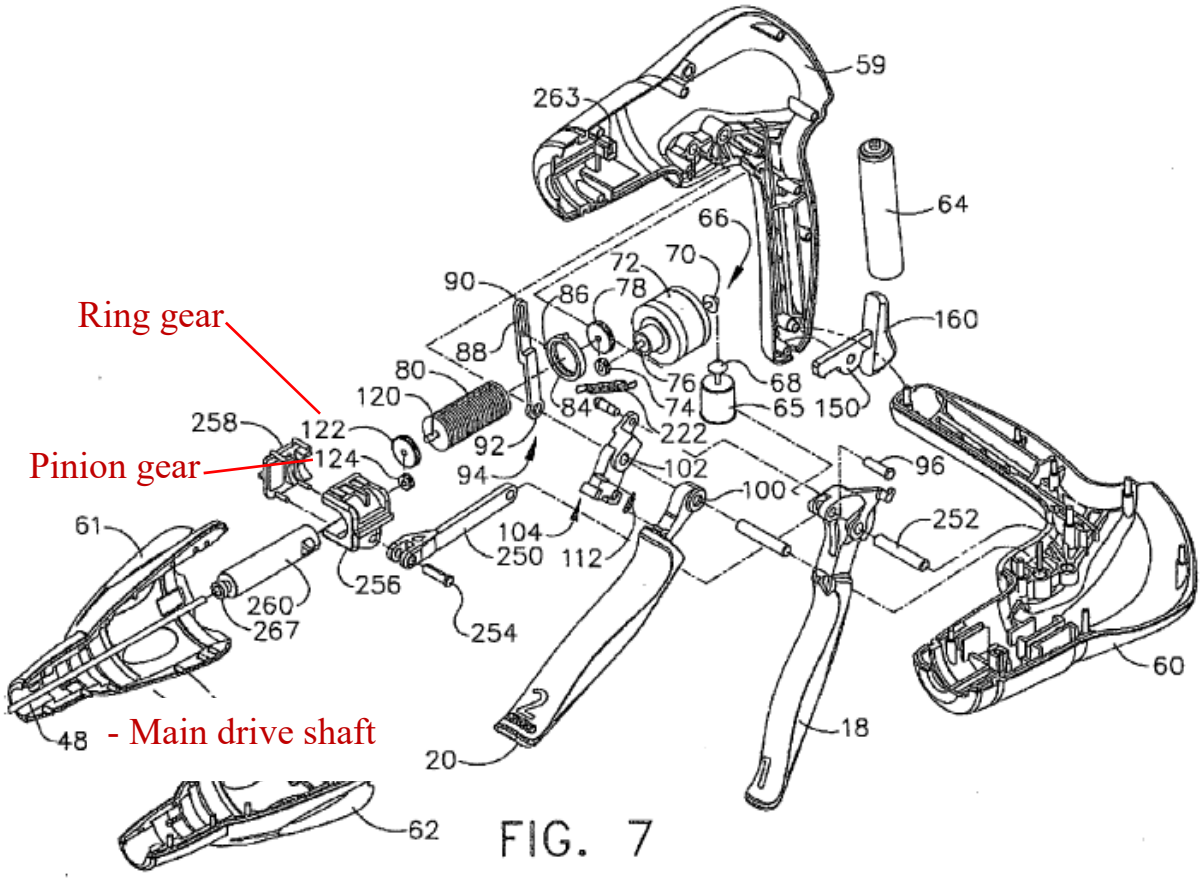

FIG. 7

A rotary drive transmission "operably coupled to one of the at least one rotatable body portions supported on the tool drive assembly"

When the Shelton stapler with Giordano's rotary firing mechanism is combined with Wallace's robotic system, the rotary drive transmission described above would be driven by, and therefore operably coupled to, a rotatable body

portion of the tool mounting portion of the robotic system instead of a motor in the handheld instrument. IS1005, ¶110; *see also* Ground 1, elements [1.P], [1.3]-[1.5].

[8.3] such that, upon application of a rotary output motion in one direction to said rotary drive transmission by said at least one rotatable body portion, said proximal drive shaft rotates said rotary end effector drive shaft in said first direction and upon application of said rotary output motion in a second direction to rotary drive transmission, said proximal drive shaft causes said rotary end effector drive shaft to rotate in said second direction.

Giordano in view of Wallace discloses this element. IS1005, ¶¶111-112. In the Shelton stapler with Giordano's rotary firing mechanism, application of a rotary output motion in one direction (*e.g.*, clockwise) to the rotary drive transmission (*see* Ground 1, element [8.2]) by the at least one rotatable body portion (*i.e.*, rotatable body 134) would cause proximal drive shaft (*i.e.*, main drive shaft 48) to rotate the rotary end effector drive shaft (*i.e.*, helical screw shaft 36) in the first (*e.g.*, forward) direction. IS1005, ¶111. As explained in Giordano, "when the main drive shaft 48 is caused to rotate by actuation of the firing trigger 20 . . . , the bevel gear assembly 52a-c causes the secondary drive shaft 50 to rotate, which in turn, because of the engagement of the drive gears 54, 56, causes the helical screw shaft 36 to rotate . . . ." IS1014, ¶42. Thus, "rotation of the motor 65 causes the main drive shaft assembly to rotate, which causes actuation of the end effector 12, as described above." IS1014, ¶46, Figs. 5, 7.

Similarly, application of the rotary output motion in a second direction (*e.g.*, counter-clockwise) to the rotary drive transmission in the combination causes

helical drive screw 36 (also called "helical screw shaft 36") to rotate in said second (*e.g.*, reverse) direction. IS1005, ¶112. For example, a " reverse motor sensor 130, when activated, sends a signal to the control unit which sends a signal to the motor 65 to reverse its rotation direction, thereby withdrawing the knife 32 of the end effector 12 following the cutting operation." IS1014, ¶48; *see also* ¶51.

This same functionality would be present when the Shelton stapler with Giordano's rotary firing mechanism is combined with Wallace's robotic system. IS1005, ¶112. In the combination, as explained above, the firing mechanism would be driven by the tool drive assembly of the robotic system instead of a motor in the handheld instrument. *Id*.

[9] The surgical tool of claim 1 wherein said elongated shaft assembly comprises a distal end portion operably coupled to said surgical end effector and a proximal end rotatably supported on said tool mounting portion for selective rotational travel about a longitudinal tool axis.

Giordano in view of Wallace discloses this element. IS1005, ¶113. As explained above, the elongated shaft assembly of the Shelton stapler comprises a distal end portion operably coupled to surgical end effector 12 and a proximal end rotatably supported on handle portion 20 for selective rotational travel about a longitudinal tool axis (the longitudinal axis of the elongated shaft assembly). *See* Ground 1, element [1.2], claim [2]. When combined with Wallace's robotic system, the proximal end of the elongated shaft assembly would be rotatably

supported on Wallace's tool mounting portion (instead of Shelton's handle portion 20) for selective rotational travel about the longitudinal tool axis. IS1005, ¶113.

[10] The surgical tool of claim 9 wherein said at least one gear-driven portion comprises a tube gear segment on said proximal end of said elongated shaft assembly and wherein said transmission assembly comprises a rotational transmission assembly comprising a rotational gear assembly operably coupled to one of the at least one rotatable body portions supported on the tool drive assembly such that upon application of a rotary output motion in a first direction to said rotational gear assembly by said at least one rotatable body portion, said rotational gear assembly rotates said elongated shaft assembly and said surgical end effector in a first rotary direction about said longitudinal tool axis and upon application of said rotary output motion in a second direction to said rotational gear assembly, said rotational gear assembly rotates said elongated shaft assembly and said surgical end effector about said longitudinal tool axis in a second rotary direction.

Giordano in view of Wallace discloses this element. IS1005, ¶¶114-116.

"<u>Said at least one gear-driven portion comprises a tube gear segment on said proximal end of said elongated shaft assembly</u>"

As explained above, the gear driven portion of the device resulting from the combination of the Shelton stapler with Wallace's robotic system would comprise a tube gear segment on the proximal end portion of the elongated shaft assembly. *See* Ground 1, claim [2].

"<u>Said transmission assembly comprises a rotational transmission assembly comprising a rotational gear assembly operably coupled to one of the at least one rotatable body portions supported on the tool drive assembly</u>"

The transmission assembly of the device resulting from the combination of the Shelton stapler with Wallace's robotic system would also comprise a rotational transmission assembly that includes a rotational gear assembly (which includes gear 420 and the shaft at the center of that gear that drives the gear in response to control motions from the tool drive assembly). *See* Ground 1, element [1.5]; IS1005, ¶115. The gear assembly drives the gear-driven tube gear on roll pulley 310.

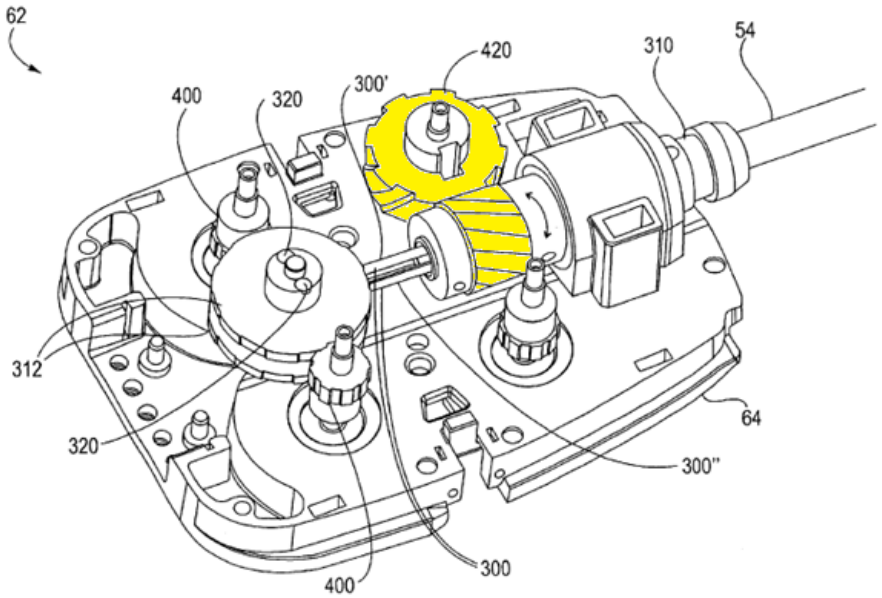

Fig. 30

Wallace's rotational gear assembly is operably coupled to one of the at least one rotatable body portions (*i.e.*, rotatable bodies 134—*see* Ground 1, element [1.P]) supported on the tool drive assembly. *See* Ground 1, elements [1.3]-[1.5], claim [2]; IS1005, ¶115.

"Such that upon application of a rotary output motion in a first direction to said rotational gear assembly by said at least one rotatable body portion, said rotational gear assembly rotates said elongated shaft assembly and said surgical end effector in a first rotary direction about said longitudinal tool axis and upon application of said rotary output motion in a second direction to said rotational gear assembly, said rotational gear assembly rotates said elongated shaft assembly and said surgical end effector about said longitudinal tool axis in a second rotary direction"

As shown above in Fig. 30 of Wallace, application of a rotary output motion in a first direction to gear 420 by at least one rotatable body 134 causes the helical tube gear on roll pulley 310 to rotate the elongated shaft assembly and the end effector in a first rotary direction (*e.g.*, clockwise). IS1005, ¶116. Specifically, "gear 420 . . . rotates the roll pulley 310, as indicated by a curved arrow. [And] roll pulley 310 rotates the shaft 54 around its central axis 51." IS1008, 13:66-14:2, Fig. 30. Similarly, rotation of the rotatable body 134 in the other direction will rotate the elongated shaft assembly and end effector in the opposite direction (*e.g.*, counterclockwise). *Id.*; IS1005, ¶116; *see also* Ground 1, elements [1.1], [1.2]. In the combination, the Wallace tube gear would rotate the Giordano shaft and end effector.

[11] The surgical tool of claim 1 wherein said elongated shaft assembly defines a longitudinal tool axis and further comprises an articulation joint therein that

facilitates selective articulation of said surgical end effector about an articulation axis that is substantially transverse to said longitudinal tool axis.

Giordano in view of Wallace discloses this element. IS1005, ¶¶117-121. As shown above, the elongated shaft assembly of the Shelton stapler defines a longitudinal tool axis, but it does not include an articulation joint.

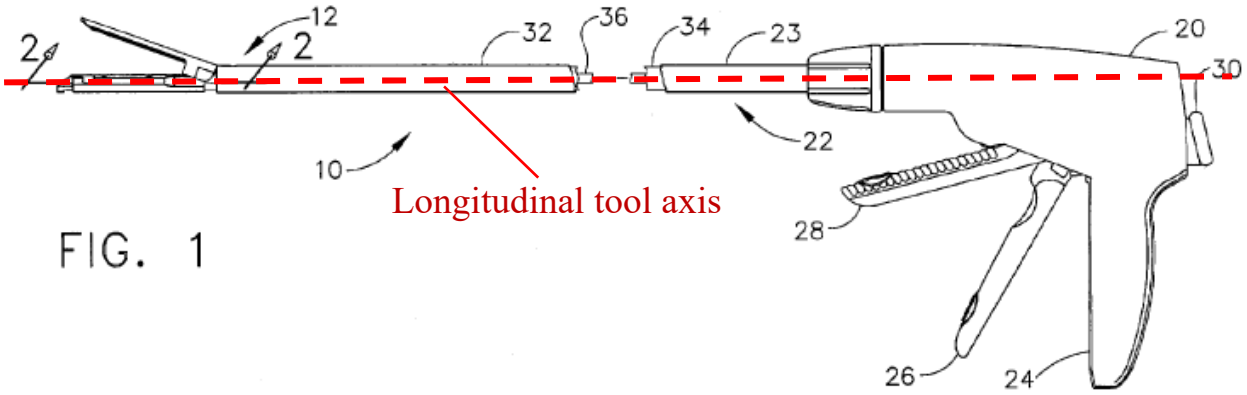

FIG. 1

It would have been obvious in view of Giordano to modify the Shelton stapler's elongated shaft assembly to include an articulation joint therein that facilitates selective articulation of said surgical end effector about an articulation axis that is substantially transverse to said longitudinal tool axis. *Id*. Giordano discloses an articulation mechanism ("Giordano's articulation mechanism") that includes, among other things, an articulation control 16 and an articulation pivot 14. *See, e.g.*, IS1014, ¶35, Fig. 2; IS1005, ¶117.

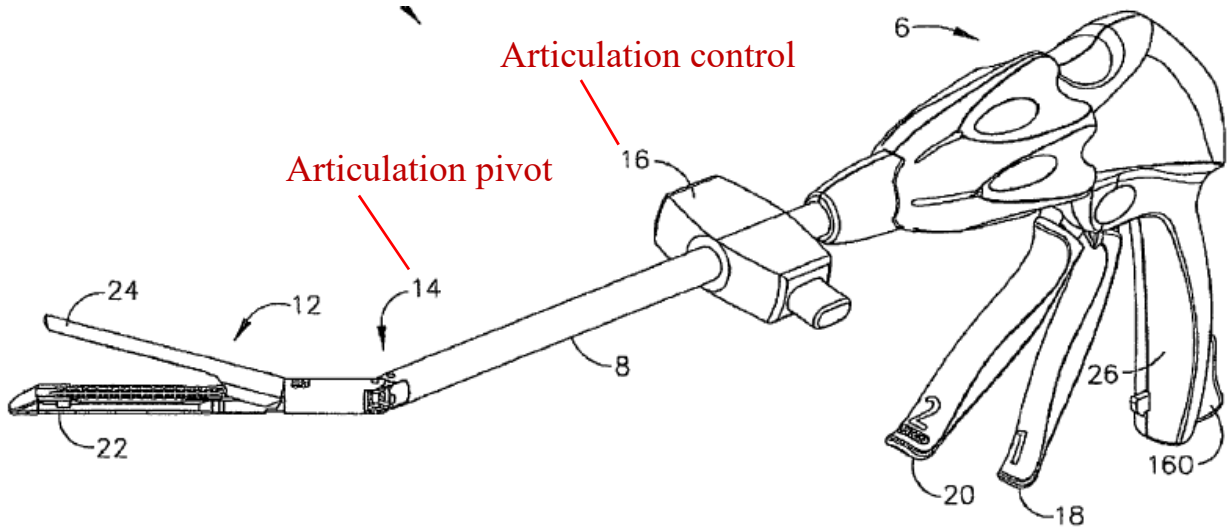

FIG. 2

And, as shown below, Giordano's articulation mechanism facilitates selective articulation of the end effector 12 about an articulation axis that is vertical relative to the horizontal shaft and is thus substantially transverse to the longitudinal tool axis. *Id.*; IS1014, ¶¶34-35, Fig. 2.

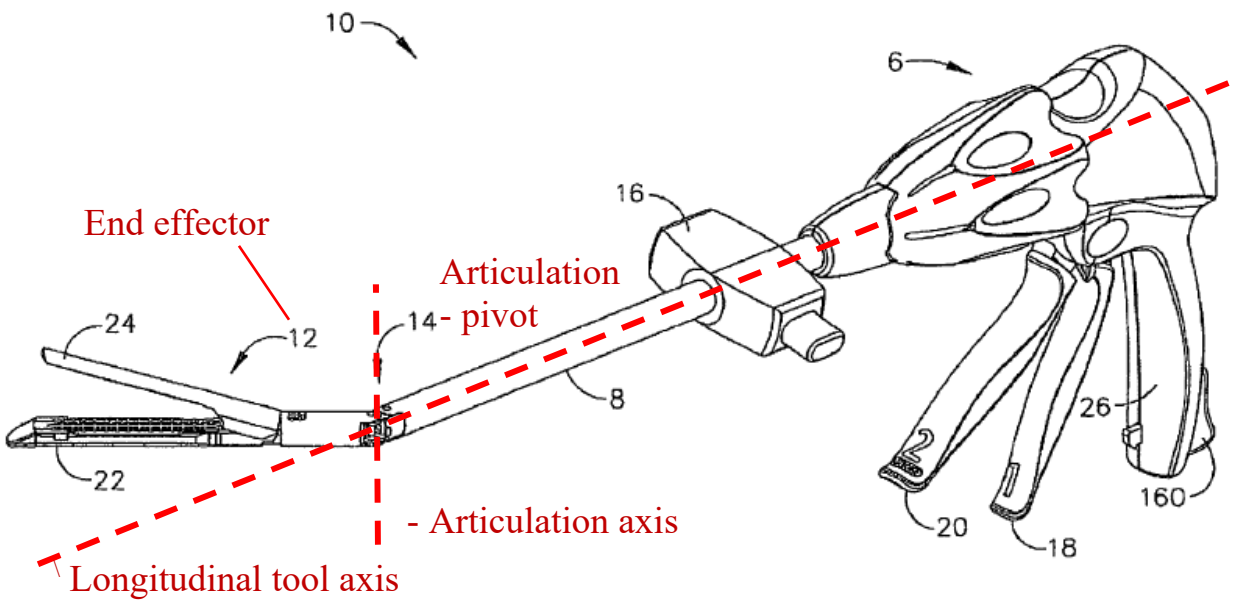

FIG. 2

A POSITA would have been motivated to add Giordano's articulation mechanism to the Shelton stapler because Giordano teaches that "[c]orrect placement and orientation of the end effector 12 may be facilitated by controls on the hand[le] 6, including . . . an articulation control 16 to effect rotational articulation of the end effector 12 about the articulation pivot 14." IS1014, ¶34. A POSITA would have been further motivated to add Giordano's articulation mechanism to the Shelton stapler because Giordano directs a POSITA to Shelton's description of "more details about such two stroke cutting and fastening instruments." IS1014, ¶39; IS1005, ¶119. And Giordano teaches that "[a]lthough the present invention has been described herein in connection with certain disclosed embodiments, many modifications and variations to those embodiments

may be implemented. . . . The foregoing description and following claims are intended to cover all such modification and variations." IS1014, ¶90; *see also* IS1015, 12:15-21.

A POSITA would have been further prompted to modify the Shelton stapler for use with Giordano's articulation mechanism because doing so would be merely the application of a known technique (use of an articulation mechanism) to a known system (a surgical stapler) ready for improvement to yield predictable results without significantly altering or hindering the functions performed by the Shelton stapler. IS1005, ¶120; *KSR,* 550 U.S. at 417.

In the combination, a POSITA would have understood that the firing bar in Shelton is thin and thus bendable about the vertical axis and thus can travel through an articulation joint. Alternatively, a POSITA would have understood that the firing mechanism of Giordano (using coupled proximal and distal shafts), which is designed to work through an articulation joint, could be used in place of Shelton's firing bar. IS1005, ¶120. *See* Ground 1, Claim [7].

Finally, it would have been obvious, in view of Wallace, to adapt the resulting device (*i.e.*, the Shelton stapler with Giordano's articulation mechanism) for use with a surgical robotic system for the same reasons it would have been obvious to modify the Shelton stapler for use with a robotic system. *See* Ground 1, element [1.P]; IS1005, ¶121.

In addition, it would have been obvious to modify Shelton's stapler to add an articulation joint as claimed in view of Wallace, which is directed to an improved articulation mechanism (called a "wrist mechanism") for surgical instruments. IS1008, Title, Abstract. Wallace teaches that "it is desirable to provide surgical tools which include mechanisms to provide three degrees of rotational movement of an end effector around three perpendicular axes to mimic the natural action of a surgeon's wrist." *Id*. at 2:62-65. Wallace further teaches an articulation mechanism using gear-driven articulation rods allowing multi-axis 360 degree movement, which improves upon Giordano's disclosure of movement along a single axis. *Id.* at 8:50-61 (discussing pitch and yaw along the y-axis and z-axis).

[24.P] A surgical tool for use with a robotic system that has a tool drive assembly that is operatively coupled to a control unit of the robotic system that is operable by inputs from an operator and is configured to provide at least one rotary output motion to at least one rotatable body portion supported on the tool drive assembly, said surgical tool comprising:

Claim 24 would have been obvious to a POSITA over Giordano in view of Wallace. IS1005, ¶¶122-131. Specifically, a POSITA would have understood that the Shelton stapler adapted for use with Giordano's articulation mechanism (*see* Ground 1, claim [11]) and Wallace's surgical robot discloses this claim.

The preamble of claim 24 is the same as the preamble of claim 1. *See* Ground 1, element [1.P]).

[24.1] a surgical end effector comprising

See Ground 1, element [1.1].

[24.1.1] at least one component portion that is selectively movable between first and second positions relative to at least one other component portion thereof in response to control motions applied to said selectively movable component portion;

See Ground 1, elements [1.1]-[1.1.2]. In the Shelton stapler with Giordano's articulation mechanism, anvil 24 is at least one component portion of the end effector that is selectively movable between first and second positions (*e.g.*, open and closed) relative to at least one other component portion (*e.g.*, elongated channel 22) in response to control motions (*e.g.*, translation of the closure tube assembly) applied to anvil 24. *Id.*; IS1005, ¶124.

[24.2] an elongated shaft assembly defining a longitudinal tool axis and comprising:

See Ground 1, elements [1.2]-[1.2.3], claim [11].

[24.2.1] a distal spine portion operably coupled to said end effector; and

Giordano in view of Wallace discloses this element. IS1005, ¶126. The Shelton stapler with Giordano's articulation mechanism includes a distal spine portion ("distal spine tube 58") operably coupled to end effector 12. IS1005, ¶126; IS1014, ¶41, Fig. 5; *see also* Ground 1, element [1.2.1].

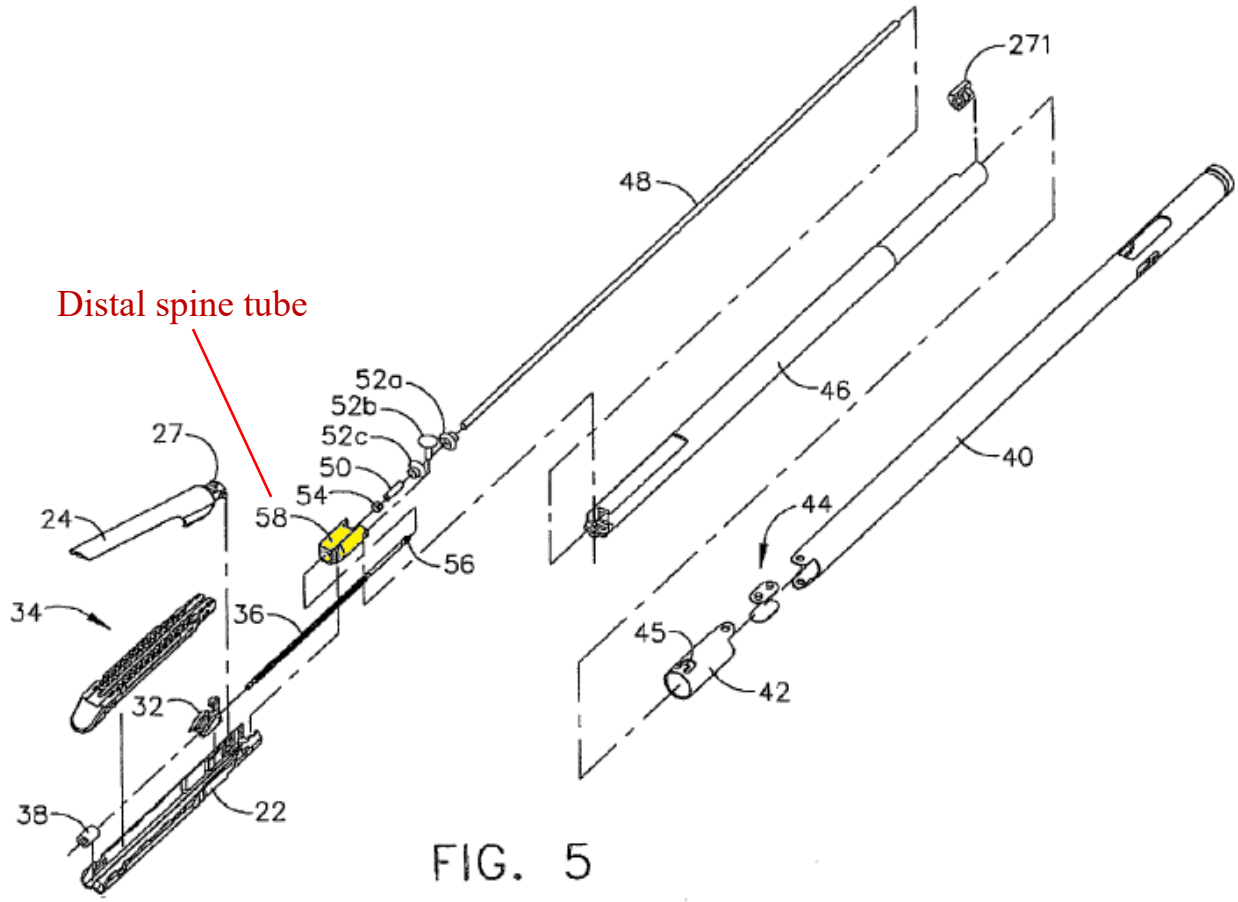

FIG. 5

Thus, when the spine assembly of the Shelton stapler as modified with Giordano's articulation mechanism is combined with Wallace's robotic system, as described above, the resulting device would disclose this limitation. IS1005, ¶126.

[24.2.2] a proximal spine portion pivotally coupled to said distal spine portion at an articulation joint to facilitate articulation of said surgical end effector about an articulation axis that is substantially transverse to said longitudinal tool axis; and

Giordano in view of Wallace discloses this element. IS1005, ¶127. The Shelton stapler with Giordano's articulation mechanism includes a proximal spine portion ("proximate spine tube 46" alone or in combination with "closure rod 260") pivotally coupled to the distal spine portion ("distal spine tube 58") by a

vertical bevel gear 52b at an articulation joint ("articulation pivot 14"). *See* Ground 1, claim [11]. IS1005, ¶127; IS1014, ¶41, Figs. 2, 4, 5.

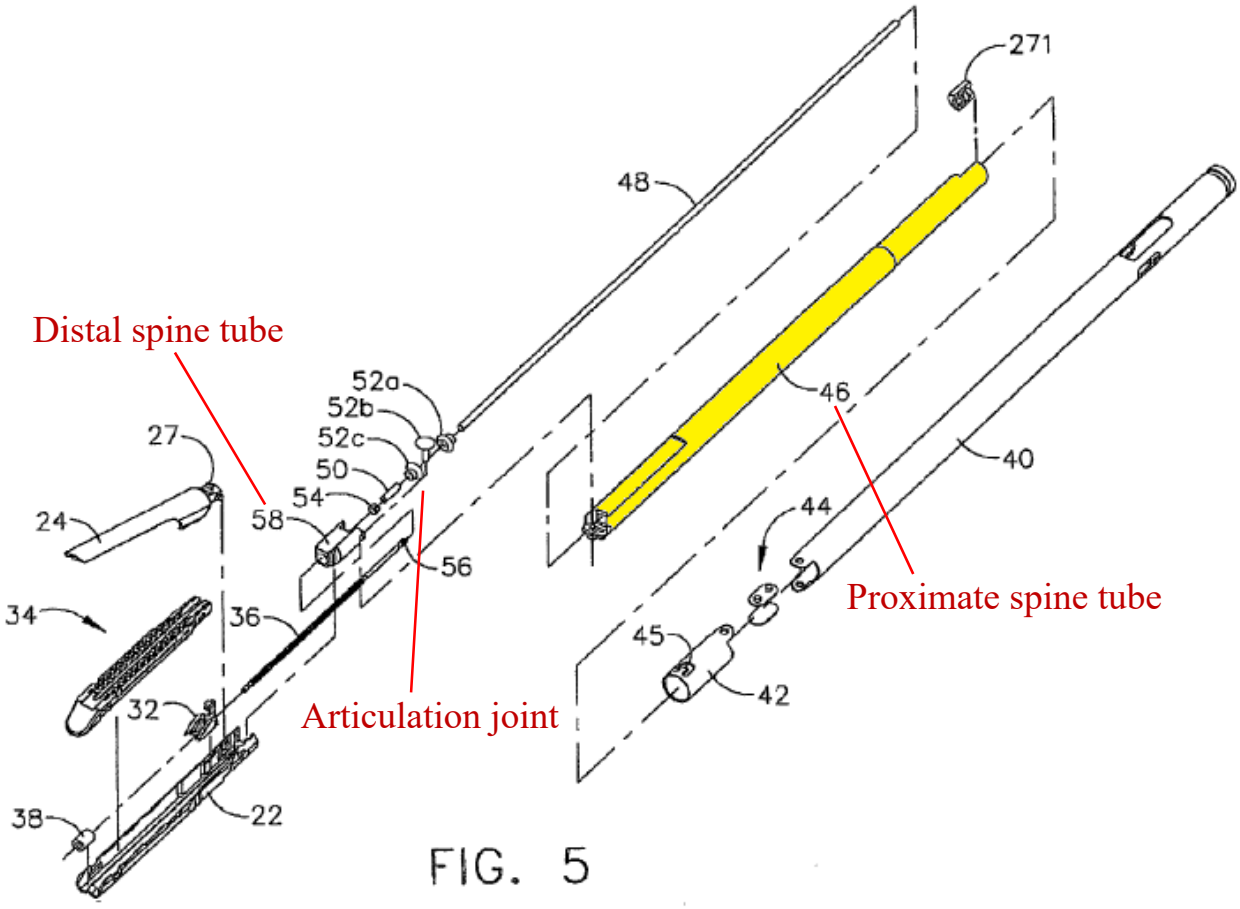

FIG. 5

This coupling of proximate spine tube 46 (or the combination of proximate spine tube 46 and closure rod 260) and distal spine tube 58 facilitates articulation of the surgical end effector 12 about an articulation axis that is substantially transverse to the longitudinal tool axis. Moreover, Wallace likewise teaches a surgical instrument with an articulation joint providing articulation about an axis transverse to the longitudinal tool axis and thus Wallace likewise provides the necessary teaching to add articulation to the Shelton stapler. *See* Ground 1, claim [11].

[24.2.3] at least one gear-driven portion that is in operable communication with said at least one selectively movable component portion of said surgical end effector and

See Ground 1, elements [1.2.2], [1.2.3].

[24.3] wherein said surgical tool further comprises: a tool mounting portion operably coupled to a [proximal / distal][5] end of said proximal spine portion, said tool mounting portion being configured to operably interface with the tool drive assembly when coupled thereto, said tool mounting portion comprising:

If the Certificate of Correction is effective, then this element is disclosed by Giordano in view of Wallace for the reasons discussed for Ground 1, element [1.3], establishing that the combination of Giordano and Wallace discloses a tool mounting portion "operably supporting a proximal end of the spine assembly." Because the tool mounting portion operably supports the proximal end of the spine assembly, it likewise is "operably coupled" to the proximal end of the proximal spine portion. IS1005, ¶129. The proximal spine portion includes the proximate spine tube 46 and in the combination, Wallace's tool mounting portion would be operably coupled to the proximal end of proximate spine tube 46 by closure rod 260 (operatively coupled need not be directly connected). IS1005, ¶129. If the

[5] On January 23, 2018, the PTO entered a Certificate of Correction replacing the word "distal" with the word "proximal" in element [24.4]. IS1002, 686. Petitioner contends the Certificate was not effective, and applies the claim both with and without the Certificate.

proximal spine portion includes closure rod 260, then Wallace's tool mounting portion would be directly connected (and thus certainly "operatively coupled"). *Id*. As discussed above, Wallace's tool mounting portion is also configured to operably interface with the tool drive assembly.

If the January 23, 2018 Certificate of Correction is deemed to be not effective, then Giordano and Wallace nonetheless discloses this element. IS1005, ¶130. Specifically, Wallace's tool mounting portion would be operably coupled via the elongated shaft assembly to the distal end of proximate spine tube 46. *Id*.

[24.3.1] a driven element rotatably supported on said tool mounting portion and configured for driving engagement with a corresponding one of the at least one rotatable body portions of the tool drive assembly to receive corresponding rotary output motions therefrom; and

See Ground 1, element [1.4].

[24.3.2] a transmission assembly in operable engagement with said driven element and in meshing engagement with a corresponding one of said at least one gear-driven portions to apply actuation motions thereto to cause said corresponding one of said at least one gear driven portions to apply at least one control motion to said selectively movable component.

See Ground 1, element [1.5].

B. Ground 2: Claims 1-11 and 24 Would Have Been Invalid as Obvious Over Giordano in View of Wallace and Further in View of Tierney

If Wallace is deemed not to disclose the Tierney subject matter incorporated by reference, it would have been obvious to combine Wallace and Tierney to arrive at the same subject matter. A POSITA implementing the embodiments of Wallace

would have been motivated to combine them with Tierney for at least two reasons. IS1005, ¶132. **First**, even if Wallace's incorporation of Tierney by reference were deemed insufficient, a POSITA would nonetheless have turned to a reference such as Tierney because Wallace leaves many details concerning surgical robots to prior art references and assumes that the reader is familiar with the cited prior art. Thus, a POSITA would seek out a reference such as Tierney for details concerning how to design and construct the robotic system on which Wallace is based. IS1009, IS1005, ¶133. **Second**, Wallace explicitly directs a POSITA to Tierney and thus a POSITA would naturally be motivated to look to Tierney for the information contained therein. IS1008, 1:10-12, 16-18; IS1005, ¶134.

Thus, claims 1-11 and 24 would have been obvious over Giordano in view of Wallace and further in view Tierney as shown in Ground 1.

C. Ground 3: Claims 1-6 and 9-10 Would Have Been Obvious Over Shelton in View of Wallace and Tierney

If Wallace is deemed not to disclose the Tierney subject matter by reference, and Giordano is deemed not to disclose the Shelton subject matter by reference, then claims 1-6 and 9-10 would have been obvious over Shelton in view of Wallace and Tierney for the reasons explained above. *See* Grounds 1-2; IS1005, ¶136.

D. Ground 4: Claims 7, 8, 11, and 24 Would Have Been Obvious Over Shelton in View of Giordano and Further in View of Wallace and Tierney

If Wallace is deemed not to disclose the Tierney subject matter by reference, and Giordano is deemed not to disclose the Shelton subject matter by reference, then claims 7, 8, 11, and 24 would have been obvious over Shelton in view of Giordano and then further in view of Wallace and Tierney for the reasons explained above. *See* Grounds 1-3. In addition, a POSITA would have been motivated to combine Giordano and Shelton specifically because Giordano cites to Shelton (and indeed, incorporates it by reference). A POSITA would have been further motivated to modify Shelton to add the articulation mechanism of Giordano because, as stated above (*see* Ground 1, element [1.P]), adding articulation improves a surgical instrument by increasing its degrees of freedom. And a POSITA would have been motivated to modify Shelton to add the firing mechanism of Giordano because, as stated above (*see* Ground 1, element [1.P]), it provides, among other benefits, increased torque over the Shelton mechanism and thus offers improvements over the firing mechanism in Shelton. *See* Grounds 1-2; IS1005, ¶¶137-140.

E. Ground 5: Claims 5 and 6 Would Have Been Obvious Over Giordano in View of Wallace and Tierney, and Further in View of Hueil

Claim 5 (and thus claim 6 which depends from claim 5) requires a "knife bar interfacing with said cutting instrument." Where the knife bar includes "firing bar 14," Shelton discloses a knife bar with an integrated cutting instrument:

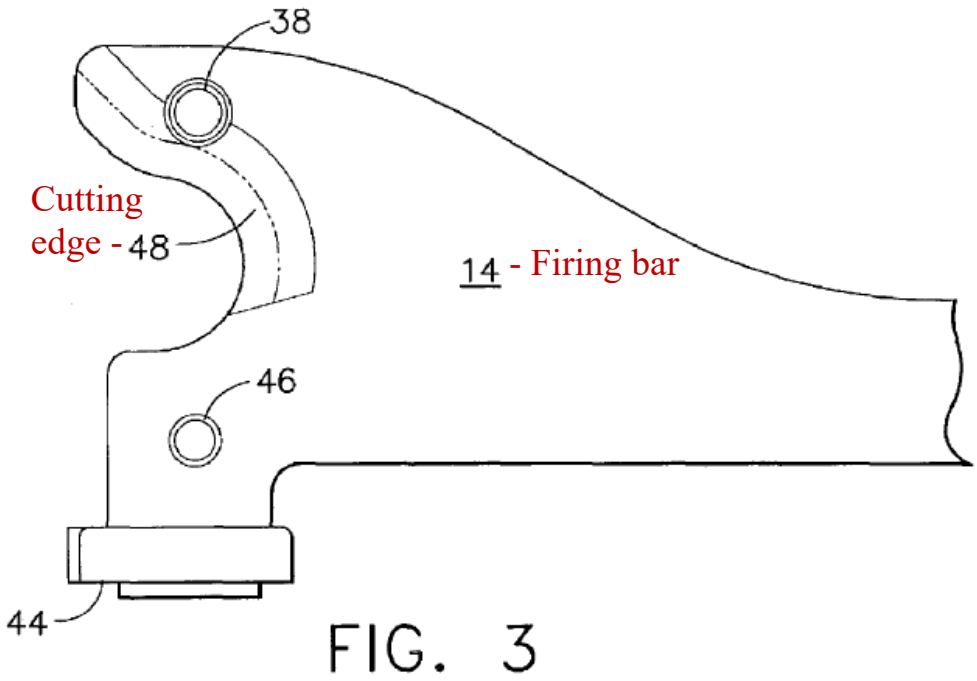

IS1015, FIG. 3. *See* Ground 1, Claim [5]. However, to the extent that the Board requires the knife bar and cutting instrument to be separate components, it would have been obvious to a POSITA to use separate components. For example, a POSITA would understand from the teachings of Hueil that it is desirable to inter-connect a knife component to a knife bar component in an articulating stapler so that the knife and knife bar may be made of different materials. IS1016, ¶¶68-69.

Specifically, Hueil teaches an articulating endoscopic stapler that uses a firing bar. In one embodiment, Hueil teaches a firing bar with an E-beam on the end ("E-beam firing bar 14"). IS1016, ¶¶10-11. Hueil also teaches an alternate firing bar that is connected to a separate E-beam. Hueil explains that in this embodiment, the firing bar may be made from a laminate, which can make articulation easier. IS1016, ¶68 ("It will be appreciated that a firing bar 172 made from a laminate material may lower the force required to articulate the end effector 102. A distally projecting end of the firing bar 172 is attached to an E-beam 178 that assists in spacing the anvil 120 from the staple cartridge 118 when the anvil 120 is in a closed position.").

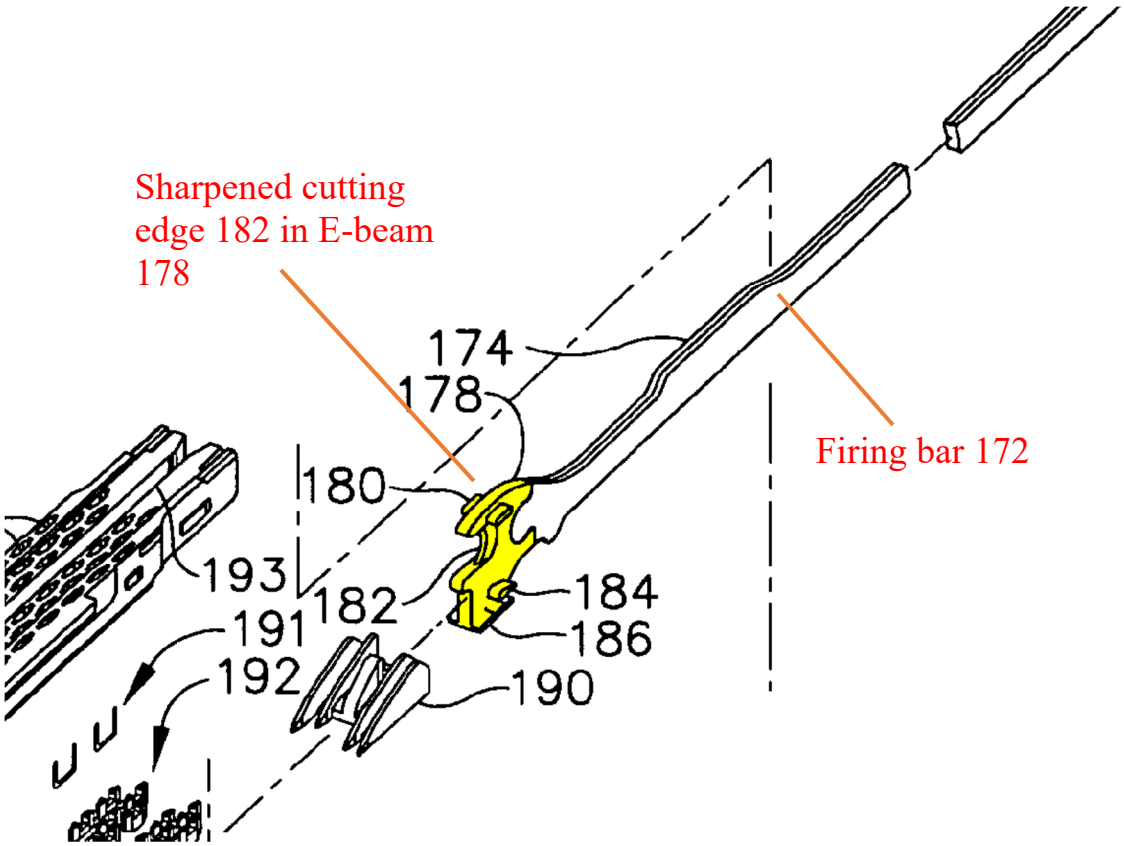

Thus, a POSITA would have been motivated to replace the firing bar with integrated knife of Shelton with the laminate firing bar and separate knife of Hueil, as taught be Hueil. IS1005, ¶¶141-143. In addition, a POSITA would have been motivated to combine Giordano with Hueil specifically because Hueil is incorporated by reference into Giordano, and Giordano points to Hueil as providing teachings of implementing an articulatable surgical instrument:

> In one embodiment, a clinician or operator of the instrument 10 may articulate the end effector 12 relative to the shaft 8 by utilizing the articulation control 16, as described in more detail in pending U.S. patent application Ser. No. 11/329,020, filed

> Jan. 10, 2006, entitled "Surgical Instrument Having An Articulating End Effector," by Geoffrey C. Hueil et al., which is incorporated herein by reference.

IS1014, ¶35.

XI. CONCLUSION

Claims 1-11 and 24 of the '969 Patent are invalid over the prior art pursuant to Grounds 1-5 set forth above. Accordingly, Petitioner request *inter partes* review of the challenged claims.

Respectfully submitted,

Dated: June 14, 2018

/Steven R. Katz/
Steven R. Katz, Reg. No. 43,706
Fish & Richardson P.C.
Attorney for Petitioner

(Trial No. IPR2018-01254)

CERTIFICATION UNDER 37 CFR § 42.24(d)

Under the provisions of 37 CFR § 42.24(d), the undersigned hereby certifies that the word count for the foregoing Petition for Inter Partes Review totals 13,986, which is less than the 14,000 allowed under 37 CFR § 42.24(a)(i).

Respectfully submitted,

Dated: June 14, 2018

/Steven R. Katz/
Steven R. Katz, Reg. No. 43,706
Fish & Richardson P.C.
Attorney for Petitioner

CERTIFICATE OF SERVICE

Pursuant to 37 CFR §§ 42.6(e)(4)(i) *et seq.* and 42.105(b), the undersigned certifies that on June 14, 2018, a complete and entire copy of this Petition for *Inter Partes* Review and all supporting exhibits were provided by Federal Express, cost prepaid, to the Patent Owner by serving the correspondence address of record as follows:

JOHNSON & JOHNSON
ONE JOHNSON & JOHNSON PLAZA
NEW BRUNSWICK NJ 08933-7003

/Diana Bradley/

Diana Bradley
Fish & Richardson P.C.
60 South Sixth Street, Suite 3200
Minneapolis, MN 55402
(858) 678-5667