UNITED STATES PATENT AND TRADEMARK OFFICE

BEFORE THE PATENT TRIAL AND APPEAL BOARD

ORTHOPEDIATRICS CORP.,
Petitioner,

v.

K2M, INC.,
Patent Owner

Inter Partes Case No. IPR2018-00521
Patent No. 9,532,816

PETITION FOR *INTER PARTES* REVIEW OF U.S. PATENT NO. 9,532,816

TABLE OF CONTENTS

I. INTRODUCTION 1

II. MANDATORY NOTICES UNDER 37 C.F.R. § 42.8 1

A. Real Party-in-Interest under 37 C.F.R. § 42.8(b)(1) 1

B. Related Matters under 37 C.F.R. § 42.8(b)(2) 1

C. Lead and Back-up Counsel under 37 C.F.R. § 42.8(b)(3) 2

D. Service Information under 37 C.F.R. § 42.8(b)(4) 3

III. POWER OF ATTORNEY UNDER 37 C.F.R. § 42.10(b) 3

IV. PAYMENT OF FEES UNDER 37 C.F.R. § 42.103 3

V. REQUIREMENTS FOR IPR UNDER 37 C.F.R. § 42.104 3

A. Grounds for Standing under 37 C.F.R. § 42.104(a) 3

B. Identification of Challenge under 37 C.F.R. § 42.104(b) and Relief Requested 4

C. Claim Construction under 37 C.F.R. § 42.104(b)(3) 5

VI. SUMMARY OF THE PATENT 5

A. Background of the Art 5

B. The Alleged Invention of the '816 Patent 6

C. Claim Key 8

VII. LEVEL OF ORDINARY SKILL IN THE ART 9

VIII. THERE IS A REASONABLE LIKELIHOOD THAT AT LEAST ONE CLAIM OF THE '816 PATENT IS UNPATENTABLE 9

A. Ground 1: Claims 16, 18, 19, 21, and 22 Are Anticipated by Whipple (FIG. 11A) (ORT-1102) 10

B. Ground 2: Claim 22 Is Rendered Obvious by Whipple (ORT-1102) in View of Runco (ORT-1103) 26

C. Ground 3: Claims 16, 18, 19, 21, and 22 Are Anticipated by Whipple (FIG. 11C) (ORT-1102) 29

D. Ground 4: Claims 16, 18, 19, 21 and 22 Are Rendered Obvious by Whipple (ORT-1102) in view of Runco (ORT-1103) 44

E. Ground 5: Claims 16, 18, 19, and 21 are Anticipated by Varieur (ORT-1104) 57

F. Ground 6: Claim 22 Is Rendered Obvious by Varieur (ORT-1104) in View of Runco (ORT-1103) 69

G. Ground 7: Claims 16, 18, 19, 21, and 22 are Anticipated by Jackson (ORT-1105) 71

H. Ground 8: Claim 18 Is Rendered Obvious by Jackson (ORT-1105) in View of Trudeau (ORT-1106) 83

IX. CONCLUSION 86

LIST OF EXHIBITS

ORT-1101	U.S. Pat. No. 9,532,816 to Barrus et al. ("the '816 Patent")
ORT-1102	U.S. App. Pub. No. 2006/0293692 by Whipple et al. ("Whipple")
ORT-1103	U.S. App. Pub. No. 2006/0079909 by Runco et al. ("Runco")
ORT-1104	U.S. App. Pub. No. 2005/0149053 by Varieur et al. ("Varieur")
ORT-1105	U.S. App. Pub. No. 2005/0192570 by Jackson ("Jackson")
ORT-1106	U.S. App. Pub. No. 2006/0089651 by Trudeau et al. ("Trudeau")
ORT-1107	Expert Declaration of Ottie Pendleton

TABLE OF AUTHORITIES

Cases

Cuozzo Speed Technologies, LLC v. Lee,
136 S. Ct. 2131 (2016) 5

General Plastic Industrial Co., Ltd. v. Canon Kabushiki Kaisha,
IPR2016-01357, Paper 19 (Sept. 6, 2017) 2

In re Dulberg,
289 F.2d 522 (C.C.P.A. 1961) 48

Nestle USA, Inc. v. Steuben Foods, Inc.,
IPR2014-01235, Paper 12 (PTAB Dec. 22, 2014) 2

Statutes

35 U.S.C. § 102(a) 10

35 U.S.C. § 102(b) 4, 27, 57, 70, 72

35 U.S.C. § 102(e) 4, 10

35 U.S.C. § 103(a) 4

35 U.S.C. § 325(d) 2

Regulations

37 C.F.R. § 42.10(b) 3

37 C.F.R. § 42.103 3

37 C.F.R. § 42.104 3

37 C.F.R. § 42.104(a) 3

37 C.F.R. § 42.104(b) 4

37 C.F.R. § 42.104(b)(3).....5

37 C.F.R. § 42.15(a).....3

37 C.F.R. § 42.8 1

37 C.F.R. § 42.8(b)(1).....1

37 C.F.R. § 42.8(b)(2).....1

37 C.F.R. § 42.8(b)(3).....2

37 C.F.R. § 42.8(b)(4).....3

I. INTRODUCTION

OrthoPediatrics Corp. ("Petitioner") petitions for *inter partes* review ("IPR") of claims 16, 18, 19, 21, and 22 (the "Challenged Claims") of U.S. Patent No. 9,532,816 (ORT-1101), which public records indicate is assigned to K2M, Inc. ("Patent Owner"). The Challenged Claims of U.S. Patent No. 9,532,816 ("the '816 Patent") relate to "a manually operated device capable of reducing a rod into position in a rod receiving notch in the head of a bone screw." ORT-1101 at 1:17-19. Each feature of the Challenged Claims is expressly or implicitly disclosed and/or rendered obvious by the prior art discussed below.

II. MANDATORY NOTICES UNDER 37 C.F.R. § 42.8

A. Real Party-in-Interest under 37 C.F.R. § 42.8(b)(1)

The real parties-in-interest are Petitioner OrthoPediatrics Corp. and OrthoPediatrics US Distribution Corp., a wholly owned subsidiary of OrthoPediatrics Corp.

B. Related Matters under 37 C.F.R. § 42.8(b)(2)

The '816 Patent is the subject of a pending request for *inter partes* review (IPR2018-00429) filed by Petitioner on January 8, 2018, challenging claims 16, 18, 19, 21, and 22. The grounds set forth in the present petition rely on ***different prior art, different combinations of prior art, different arguments regarding the asserted prior art, and different expert declaration testimony*** than those relied

upon in the petition submitted in connection with IPR2018-00429. *See, e.g., Nestle USA, Inc. v. Steuben Foods, Inc.*, IPR2014-01235, Paper 12 at 7 (PTAB Dec. 22, 2014); *see also* 35 U.S.C. § 325(d). Furthermore, the present petition is being filed ***two weeks*** from the filing of the petition in IPR2018-00429, ***and Petitioner has not received the Patent Owner's preliminary response or the Board's decision on whether to institute review***. *See, e.g., General Plastic Industrial Co., Ltd. v. Canon Kabushiki Kaisha*, IPR2016-01357, Paper 19 at 15-16 (Sept. 6, 2017) (informative).

Patent Owner has also asserted the '816 Patent against OrthoPediatrics Corp. and OrthoPediatrics US Distribution Corp. in a civil action, Case No. 1:17-cv-00061-GMS, filed on January 20, 2017, in the U.S. District Court for the District of Delaware and served on Petitioner on January 23, 2017.

C. Lead and Back-up Counsel under 37 C.F.R. § 42.8(b)(3)

Petitioner provides the following designation of counsel:

Lead Counsel	Back-up Counsel
Paul M. Ulrich (Reg. No. 46,404) ULMER & BERNE LLP 600 Vine Street, Suite 2800 Cincinnati, Ohio 45202 Telephone: (513) 698-5156 Fax: (513) 698-5157 E-mail: pulrich@ulmer.com	Christopher A. Singh (Reg. No. 61,236) ULMER & BERNE LLP 600 Vine Street, Suite 2800 Cincinnati, Ohio 45202 Telephone: (513) 698-5084 Fax: (513) 698-5085 E-mail: csingh@ulmer.com

D. Service Information under 37 C.F.R. § 42.8(b)(4)

Please address all correspondence and service to the lead counsel and back-up counsel at the address provided above. Petitioner consents to electronic service by electronic mail.

III. POWER OF ATTORNEY UNDER 37 C.F.R. § 42.10(b)

Pursuant to 37 C.F.R. § 42.10(b), a Power of Attorney accompanies this petition. The above-identified Lead and Back-up Counsel are registered practitioners associated with Customer No. 69,082 listed in that Power of Attorney.

IV. PAYMENT OF FEES UNDER 37 C.F.R. § 42.103

The fee set forth in 37 C.F.R. § 42.15(a) for requesting IPR of the Challenged Claims was paid at the time of filing this petition. Petitioner authorizes the United States Patent and Trademark Office ("the Office") to charge Deposit Account No. 501884 for any additional fees that may be due in connection with this petition.

V. REQUIREMENTS FOR IPR UNDER 37 C.F.R. § 42.104

A. Grounds for Standing under 37 C.F.R. § 42.104(a)

Petitioner certifies that the '816 Patent is available for IPR and that Petitioner is not barred or estopped from requesting IPR on the grounds identified herein.

B. Identification of Challenge under 37 C.F.R. § 42.104(b) and Relief Requested

Petitioner requests IPR of claims 16, 18, 19, 21, and 22 of the '816 Patent based on the prior art and grounds set forth below and requests that the Board find each of these claims to be unpatentable. In support of this petition, the declaration of Ottie Pendleton (ORT-1107) also has been submitted.

Ground	Claims	Basis for Unpatentability
Ground 1	16, 18, 19, 21, 22	Anticipated under 35 U.S.C. § 102(e)[1] by Whipple (FIG. 11A)
Ground 2	22	Obvious under 35 U.S.C. § 103(a) by Whipple in view of Runco
Ground 3	16, 18, 19, 21, 22	Anticipated under 35 U.S.C. § 102(e) by Whipple (FIG. 11C)
Ground 4	16, 18, 19, 21, 22	Obvious under 35 U.S.C. § 103(a) by Whipple in view of Runco
Ground 5	16, 18, 19, 21	Anticipated under 35 U.S.C. § 102(b) by Varieur
Ground 6	22	Obvious under 35 U.S.C. § 103(a) by Varieur in view of Runco
Ground 7	16, 18, 19, 21, 22	Anticipated under 35 U.S.C. § 102(b) by Jackson
Ground 8	18	Obvious under 35 U.S.C. § 103(a) by Jackson in view of Trudeau

[1] References to 35 U.S.C. §§ 102 and 103 throughout this petition are to the pre-AIA versions, which apply to the '816 Patent.

C. Claim Construction under 37 C.F.R. § 42.104(b)(3)

Petitioner does not believe any specific claim terms of the Challenged Claims require construction for the purposes of this petition.[2] Nevertheless, any terms that are construed should be given their "broadest reasonable construction in light of the specification." 37 C.F.R. § 42.100(b); *see also Cuozzo Speed Technologies, LLC v. Lee*, 136 S. Ct. 2131, 2144–45 (2016).

VI. SUMMARY OF THE PATENT

A. Background of the Art

The '816 Patent is generally directed to orthopedic surgery, and more specifically to devices for stabilizing and fixing bones, particularly vertebrae. ORT-1101 at 1:14-16. According to the '816 Patent, "a surgical procedure known as spinal fusion" is "a common solution" to various disorders, diseases, and types of injuries relating to the spinal column (*e.g.*, scoliosis). *Id.* at 1:37-39. Such a surgical procedure "involves fusing two or more vertebral bodies in order to eliminate motion at the intervertebral disc or joint." *Id.* at 1:39-41. The '816 Patent further explains that "it is common practice to ***place bone screws*** into the

[2] For reasons unrelated to the grounds set forth in this petition, Petitioner and Patent Owner dispute the construction of various claim terms of the Challenged Claims in the related district court proceeding, where a different claim construction standard applies.

vertebral bodies and ***then connect a metal rod*** between adjacent vertebral bodies" in order to immobilize the spinal column. *Id.* at 1:45-50 (emphasis added). That is, the surgeon uses a long spinal rod to connect multiple vertebrae by placing the rod into a "receiving slot" in each head of the bone screws that have already been attached to the vertebrae. *See id.*

"The process of properly inserting the spinal rod into the receiving slot of a bone screw and then securing that connecting rod in place often can require that the surgeon use a number of instruments." *See id.* at 1:54-58. According to the '816 Patent, "it is necessary that a device and method be provided by which the rod can be reduced into the head of each of the sequentially aligned bone screws and, as necessary, easily adjusted so as to facilitate the process for the surgeon." *Id.* at 1:65–2:3. The '816 Patent further discloses that it is desired to provide a rod reduction instrument that "effectively reduces . . . a connecting rod into position in . . . a bone screw and holds that rod in position while other portions of the connecting rod are positioned and reduced into other bone screws allowing for position adjustment as necessary during the process." *See id.* at 2:4-11.

B. The Alleged Invention of the '816 Patent

The '816 Patent relates to a device that is used by a surgeon to lower—or ***reduce***—a spinal rod into the slot of a bone screw during an orthopedic surgery. These types of devices—conventionally called "rod reducers" or "rod

approximators"—have been around long before the named inventors of the '816 Patent filed their patent applications. According to the specification, the alleged invention allows the surgeon to accomplish two separate tasks: (1) grasp a bone screw and (2) reduce a spinal rod into the head of the bone screw. *See id.* at 2:22-26. In one embodiment (the only disclosed embodiment) of the '816 Patent, the rod reducer 10 uses a grasping fork assembly 14 with a "screw jack" mechanism 12, shown below in Figures 2 and 5 of the '816 Patent:

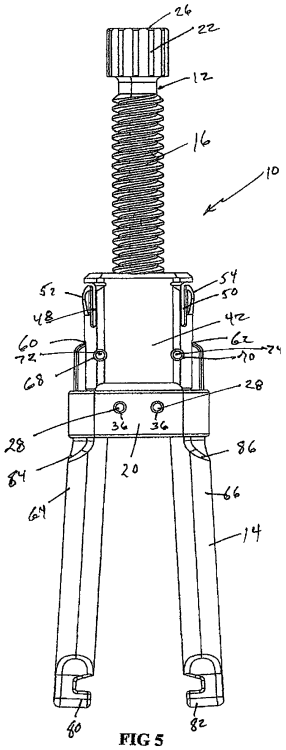

FIG 5

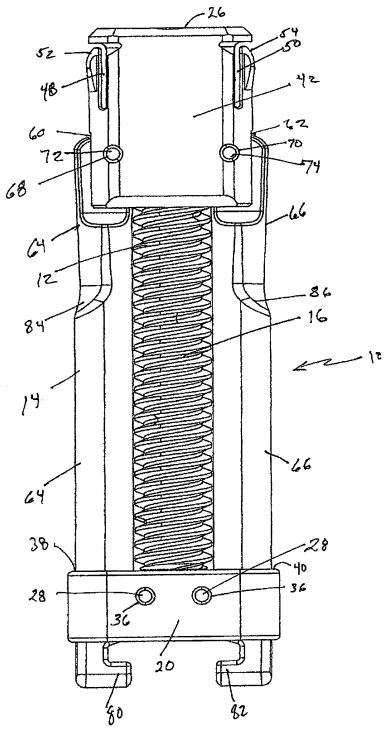

FIG 2

The rod reducer is a manually operated device capable of reducing a rod into a rod receiving slot of a bone screw head by the rotation of a screw shaft 16. *Id.* at 1:16-19. Figure 5 shows a front view of the device before rotation of the screw

shaft 16, *i.e.*, "in a ready configuration." *Id.* at 3:31-32. The fork assembly includes two opposed, elongated "grasping members" 64 and 66. (*See id.* at 5:56-65; FIGS. 2 and 5, above. At the bottom (*i.e.*, distal end) of the screw shaft 16 is a "rod contact member" 20. *See id.* at 4:39-42. When a surgeon rotates the screw shaft 16, both it and the rod contact member 20 move downward. When a rod is positioned between the grasping members 64 and 66, rotation of the screw shaft 16 pushes the rod downward into the bone screw. *See, e.g., id.* at 6:9-55. Figure 2 thus shows the device "in an activated configuration." *Id.* at 3:23-24.

C. Claim Key

In discussing the limitations of the Challenged Claims, this petition refers to limitations according to the below "key":

Claim Limitations
[16-PRE] A rod reducing device comprising:
[16-1] a housing defining a longitudinal axis,
[16-2] the housing including first and second grasping members configured to grasp a portion of a bone anchor therebetween,
[16-3] the first and second grasping members defining a plane;
[16-4] a rotatable member extending through the housing along the longitudinal axis; and
[16-5] a rod contact member positioned at a distal end of the rotatable member,
[16-6] the rod contact member translatable along the longitudinal axis in response to rotation of the rotatable member about the longitudinal axis,

Claim Limitations
[16-7] wherein the rod contact member and the rotatable member are translatable within the plane defined by the first and second grasping members.
[18-1] The rod reducing device of claim 16, wherein respective distal ends of the first and second grasping members include at least one grasping feature engageable with a portion of a bone anchor.
[19-1] The rod reducing device of claim 16, wherein distal movement of the rod contact member urges a rod towards distal ends of the first and second grasping members.
[21-1] The rod reducing member of claim 16, wherein a portion of the rod contact member is positioned between the first and second grasping members.
[22-1] The rod reducing member of claim 16, wherein the rod contact member is attached to the distal end of the rotatable member.

VII. LEVEL OF ORDINARY SKILL IN THE ART

A person of ordinary skill in the art at the time of the alleged invention would have at least a bachelor's degree in mechanical engineering or biomedical engineering combined with at least one year of post-graduate or industry work experience in orthopedic instruments or an equivalent. ORT-1107 ¶ 13.

VIII. THERE IS A REASONABLE LIKELIHOOD THAT AT LEAST ONE CLAIM OF THE '816 PATENT IS UNPATENTABLE

As detailed below, each of claims 16, 18, 19, 21, and 22 of the '816 Patent is anticipated and/or rendered obvious by at least one or more references, singularly or in combination (the "Grounds"). Each of the Grounds independently shows a reasonable likelihood that one or more of the claims of the '816 Patent are unpatentable. The Grounds are not cumulative or redundant.

A. Ground 1: Claims 16, 18, 19, 21, and 22 Are Anticipated by Whipple (FIG. 11A) (ORT-1102)

Whipple anticipates claims 16, 18, 19, 21, and 22 of the '816 Patent. Whipple was filed on June 2, 2005, and published on December 28, 2006. ORT-1102 at 1. Therefore, Whipple is prior art under at least 35 U.S.C. § 102(e)[3] and 35 U.S.C. § 102(a). Whipple was never cited nor considered by the Examiner during prosecution of the '816 Patent. ORT-1101 at 1-2.

FIG. 2

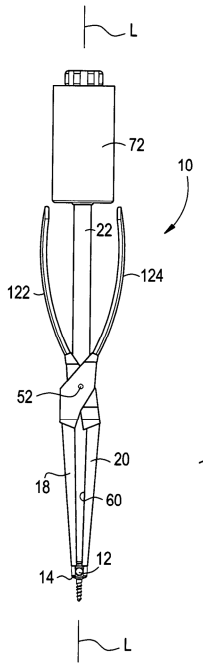

FIG. 4

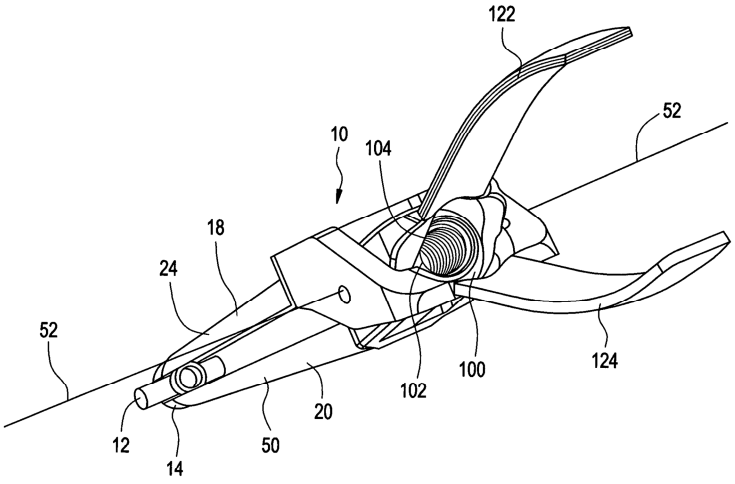

FIG. 11A

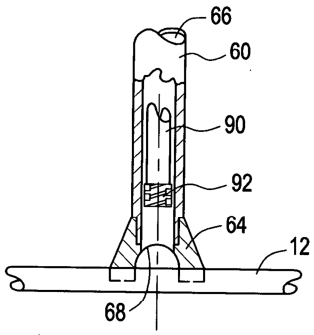

Whipple generally discloses instruments and methods for manipulating a spinal fixation element (*i.e.*, a spinal rod) relative to a bone anchor. ORT-1102 ¶ 5. For

[3] The 35 U.S.C. § 102(e) critical reference date of Whipple is at least as early as its filing date of June 2, 2005.

example, Whipple discloses an instrument 10 that includes first and second arms 24, 50 configured to releasably engage the instrument 10 with a bone anchor. *See id.* ¶¶ 28-32. The instrument 10 further includes an adjustment mechanism 22 coupled to the first arm 24 and/or the second arm 50. *Id.* ¶¶ 34-37. The adjustment mechanism 22 is configured to adjust a spinal fixation element 12 (*i.e.*, a spinal rod) relative to the bone anchor. *Id.* ¶ 34.

1. Claim 16:

a. [16-PRE]: "A rod reducing device comprising"

FIG. 2

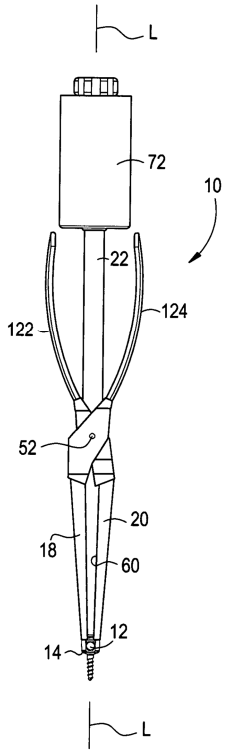

Whipple discloses the claimed "rod reducing device" as recited in claim 16. For example, Whipple discloses "***an instrument 10*** [the claimed *rod reducing*

device][4] ***for manipulating a spinal fixation element 12, such as, for example, a spinal rod***, a plate, a tether or cable or combinations thereof, relative to a bone anchor 14, such as, for example, a bone screw or hook." *Id.* ¶ 26 (emphasis added); FIG. 2, above. Whipple further discloses that "the exemplary instrument 10 is suited for . . . ***vertical adjustment of the spinal fixation element 12*** [*i.e.*, a *spinal rod*] ***relative to the bone anchor 14***." *Id.* (emphasis added).

b. [16-1]: "a housing defining a longitudinal axis"

FIG. 2

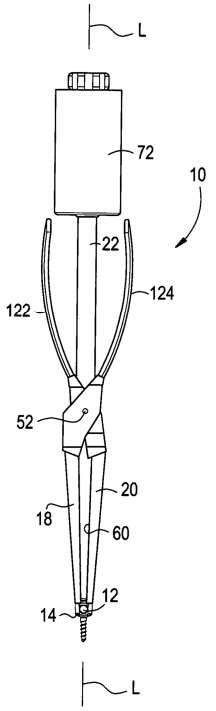

FIG. 4

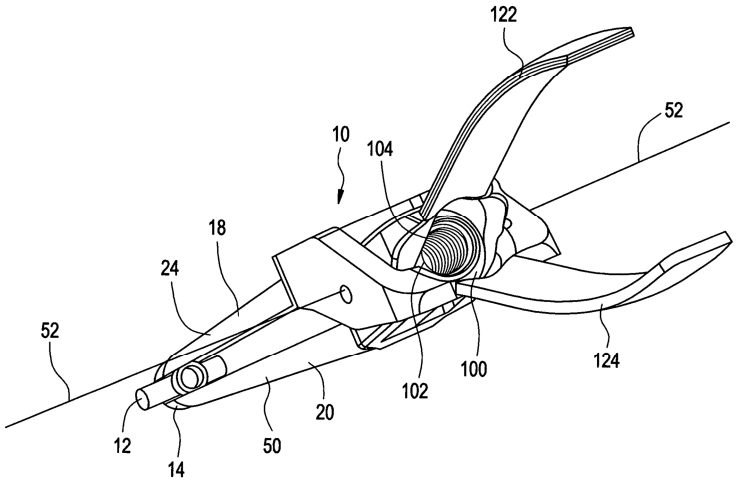

[4] To facilitate analysis of the Challenged Claims, many of the excerpts from the prior art in this petition include bracketed references to corresponding claim limitations of the '816 Patent.

Whipple discloses the claimed "housing defining a longitudinal axis" as recited in claim 16. For example, Whipple discloses "a coupling mechanism 100 [the claimed *housing*] that is connected to the first arm 24 and/or the second arm 50 and is configured to receive the second adjustment mechanism 22, *e.g.*, tube 60." *Id.* ¶ 36; FIGS. 2, 4, above. Whipple further discloses "the handles 122, 124 . . . are oriented generally in a direction parallel to ***the longitudinal axis L*** of the instrument 10." *Id.* ¶ 42 (emphasis added); FIG. 2, above. Thus, Whipple discloses coupling mechanism 100 defining the longitudinal axis L.

c. [16-2]: "the housing including first and second grasping members configured to grasp a portion of a bone anchor therebetween"

FIG. 4

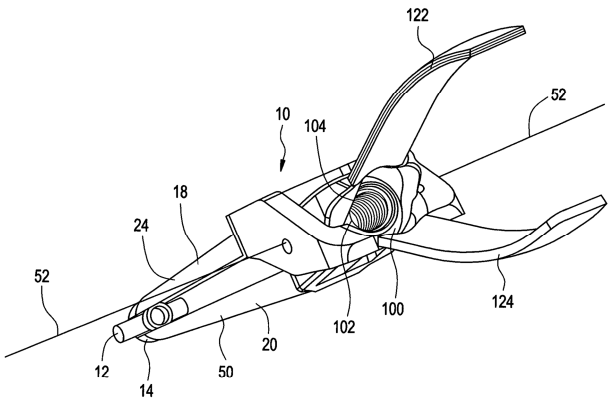

FIG. 5

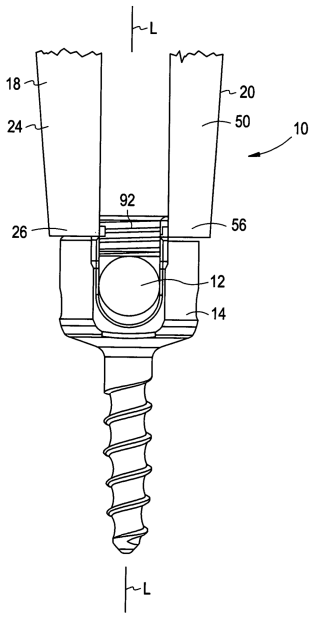

FIG. 13

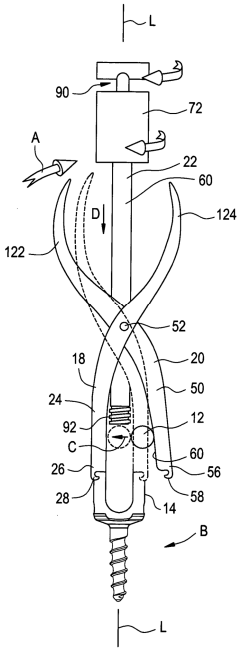

Whipple discloses the claimed "housing including first and second grasping members configured to grasp a portion of a bone anchor therebetween" as recited

in claim 16. As discussed above, Whipple discloses that the coupling mechanism 100 (the claimed *housing*) "is connected to the first arm 24 and/or the second arm 50." *Id.* ¶ 36; FIG. 4, above. Additionally, Whipple discloses the "***first arm 24*** [the claimed *first grasping member*] having a distal end 26 ***configured to releasably engage a bone anchor***" and the "***second arm 50*** [the claimed *second grasping member*] . . . hav[ing] a distal end 56 ***configured to releasably engage the bone anchor 14***." *Id.* ¶¶ 28, 32 (emphasis added); FIGS. 4-6, above. FIG. 5 and 13, above, clearly show a portion of the bone anchor 14 grasped between the first and second arms 24 and 50, respectively.

d. [16-3]: "the first and second grasping members defining a plane"

FIG. 2

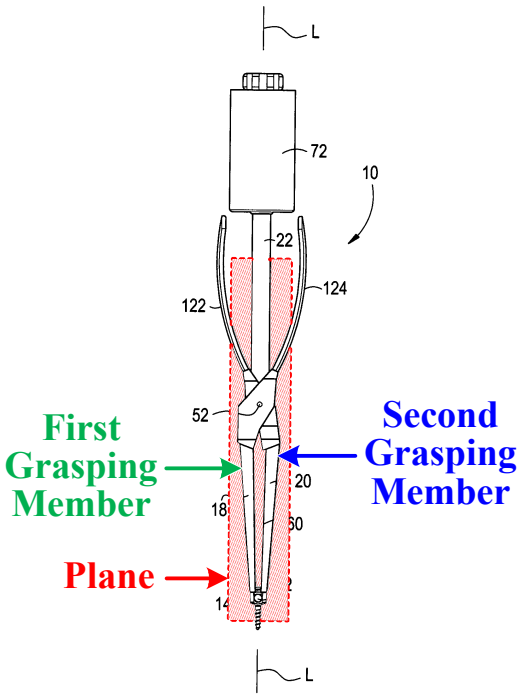

FIG. 4

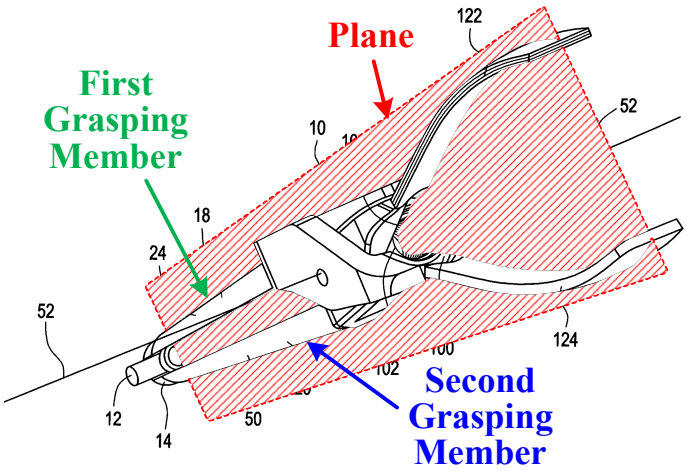

Whipple discloses the claimed "the first and second grasping members defining a plane." As shown in FIGS. 2 and 4, the first and second arms 24, 50 (*i.e.,* the claimed *first and second grasping members*) of Whipple implicitly define a plane. *Id.* at FIGS. 2 and 4, above (annotated); *see also* ORT-1107 ¶¶ 53-54.

e. [16-4]: "a rotatable member extending through the housing along the longitudinal axis"

FIG. 2

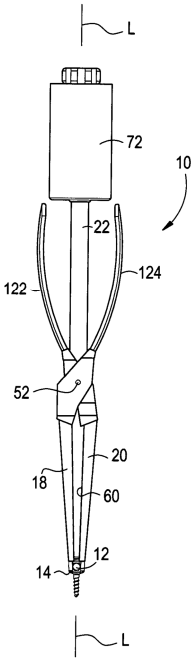

FIG. 4

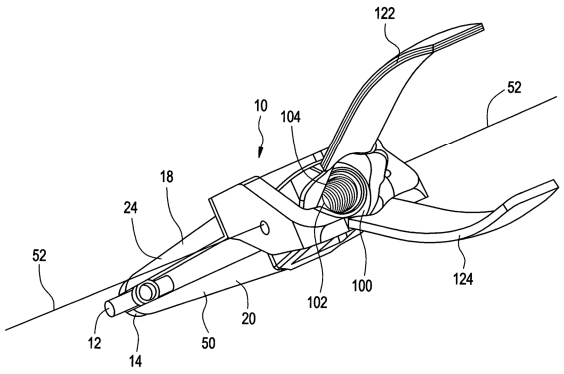

FIG. 13

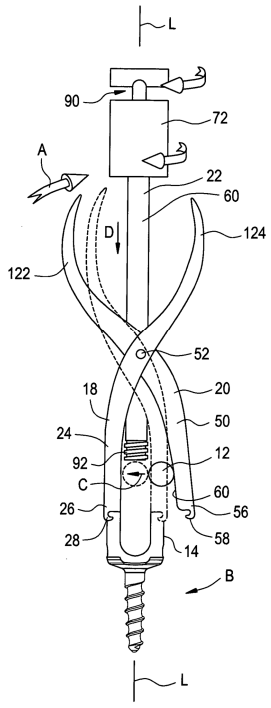

Whipple discloses the claimed "rotatable member extending through the housing along the longitudinal axis" as recited in claim 16. For example, Whipple states that ***"[the] coupling mechanism 100*** [the claimed *housing*] . . . ***is configured to receive the second adjustment mechanism 22, e.g., tube 60*** [the claimed *rotatable member*], and permit motion of the second adjustment

mechanism 22 relative to the first arm 24 [the claimed *first grasping member*] and/or the second arm 50 [the claimed *second grasping member*]." *Id.* ¶ 36 (emphasis added); FIGS. 4, 13, above. Whipple further discloses that "***[r]otation of the tube 60*** [the claimed *rotatable member*] relative to the collar 102 causes the tube 60 to advance distally or proximally, depending on the direction of rotation, relative to the first arm 24 and the second arm 50 [the claimed *first and second grasping members*]." *Id.* (emphasis added). As shown in FIGS. 2, 4, 13 above, the second adjustment mechanism 22/tube 60 extends through the coupling mechanism 100 (the claimed *housing*) along the longitudinal axis L.

f. [16-5]: "a rod contact member positioned at a distal end of the rotatable member"

Whipple discloses "a rod contact member positioned at a distal end of the rotatable member" as recited in claim 16. For example, Whipple discloses "***the distal end 64*** [the claimed *rod contact member*] of the tube 60 [the claimed *rotatable member*] ***may directly contact the spinal fixation element 12*** [*i.e.*, the spinal rod] to effect adjustment of the spinal fixation element 12." *Id.* ¶ 35 (emphasis added); FIG. 1, below. Whipple also discloses "***the distal end 64*** [the claimed *rod contact member*] of the tube [60] ***may be sized and shaped to facilitate contact with the spinal fixation element 12***." *Id.* (emphasis added). For example, Whipple discloses "***the distal end 64*** [the claimed *rod contact member*] may include ***an arcuate contact surface 68*** having a curvature approximate to the

curvature of the spinal fixation element 12." *Id.* (emphasis added); FIG. 11A, below. As shown in FIG. 11A below, the distal end 64 having the accurate contact surface 68 (the claimed *rod contact member*) of Whipple is positioned at the distal-most end of the tube 60 (the claimed *rotatable member*).

FIG. 1

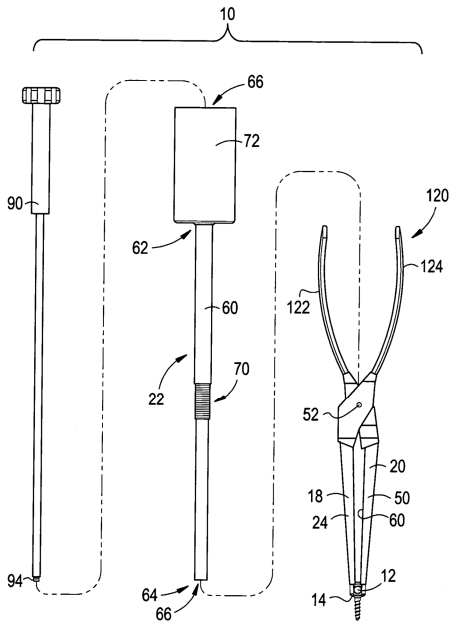

FIG. 11A

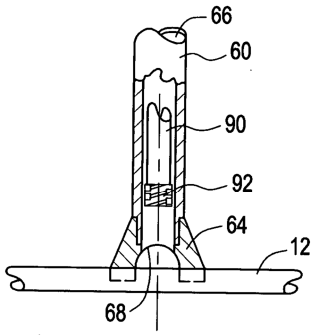

g. [16-6]: "the rod contact member translatable along the longitudinal axis in response to rotation of the rotatable member about the longitudinal axis"

Whipple discloses the claimed "rod contact member translatable along the longitudinal axis in response to rotation of the rotatable member about the longitudinal axis" as recited in claim 16. For example, Whipple states that "***[r]otation of the tube 60*** [the claimed *rotatable member*] relative to the collar 102 causes the tube 60 to advance distally or proximally, depending on the direction of rotation, relative to the first arm 24 and the second arm 50 [the claimed *first and*

second grasping members]. *Id.* ¶ 36 (emphasis added); FIG. 13, below. Whipple also states that "[u]pon vertical alignment of the spinal fixation element 12 [*e.g.*, the spinal rod] with ***the longitudinal axis L*** of the instrument and the bone anchor, the tube 60 may be ***advanced distally*** in a second direction into contact with spinal fixation element 12, as indicated by arrow D." *Id.* ¶ 46; FIG. 13, below. Because the distal end 64 (the claimed *rod contact member*) is positioned at the distal end of the tube 60 (the claimed *rotatable member*), it too advances distally along the longitudinal axis L in response to rotation of the tube 60 about the longitudinal axis L.

FIG. 13

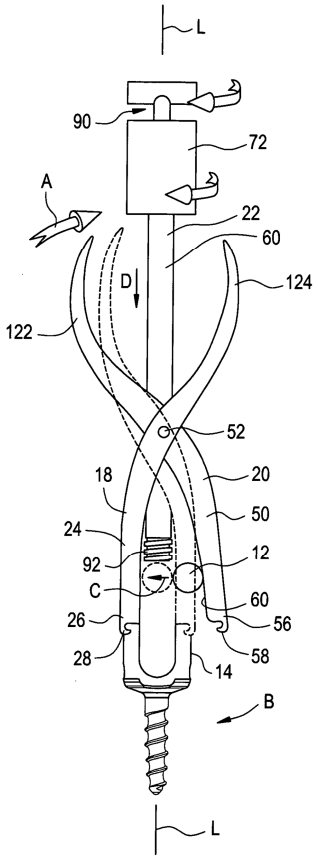

h. [16-7]: "wherein the rod contact member and the rotatable member are translatable within the plane defined by the first and second grasping members"

FIG. 13

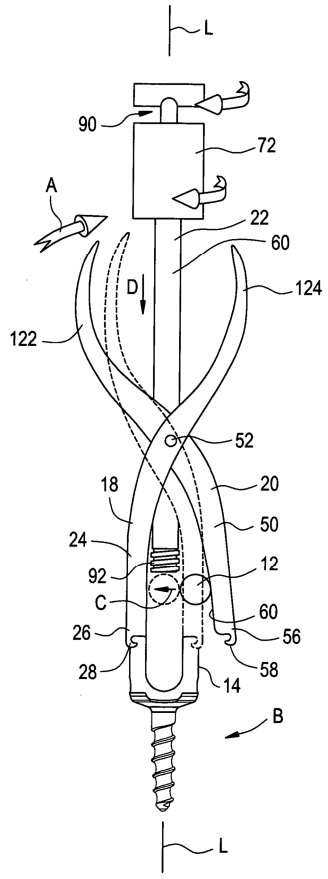

FIG. 9

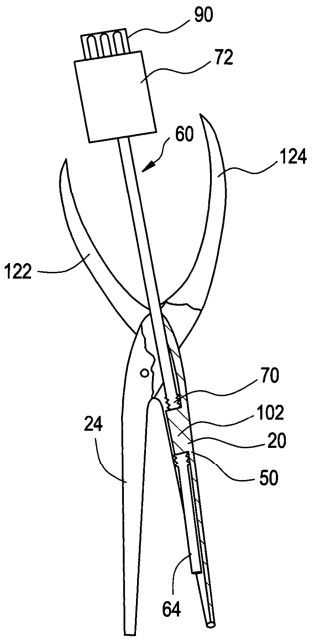

Whipple discloses the claimed "rod contact member and the rotatable member are translatable within the plane defined by the first and second grasping members" as recited in claim 16. As illustrated below in annotated FIGS. 2 and 4, the first and second arms 24, 50 (*i.e.,* the claimed *first and second grasping members*) of Whipple implicitly define a plane. *Id.* FIGS. 2 and 4, below (annotated). As discussed above, Whipple discloses that "***[r]otation of the tube 60*** [the claimed *rotatable member*] . . . ***causes the tube 60 to advance distally*** or

proximally . . . relative to the first arm 24 and the second arm 50 [the claimed *first and second grasping members*]." *Id.* ¶ 36 (emphasis added); FIG. 13, above.

Additionally, because the distal end 64 (the claimed *rod contact member*) is positioned at the distal end of the tube 60 (the claimed *rotatable member*) it too advances distally relative to the first and second arms 24, 50 (the claimed *first and second grasping members*). For example, as shown in FIGS. 9 and 13 above, the distal end 64 (the claimed *rod contact member*) and tube 60 (the claimed *rotatable member*) are disposed between and translatable within the first and second arms 24, 50 (the claimed *first and second grasping members*).

FIG. 2

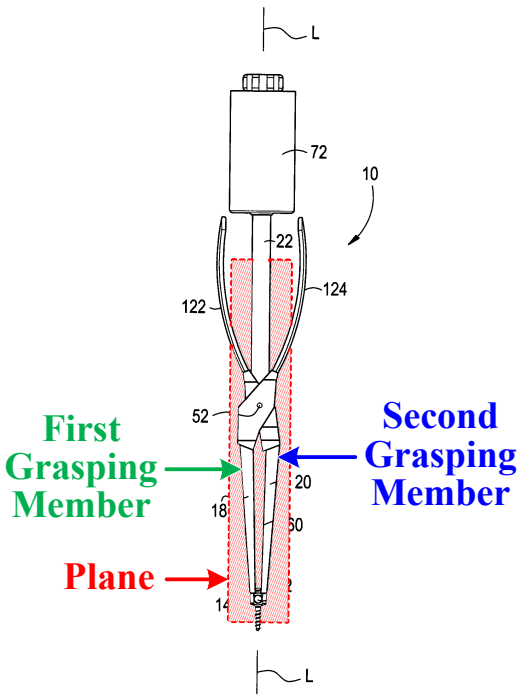

FIG. 4

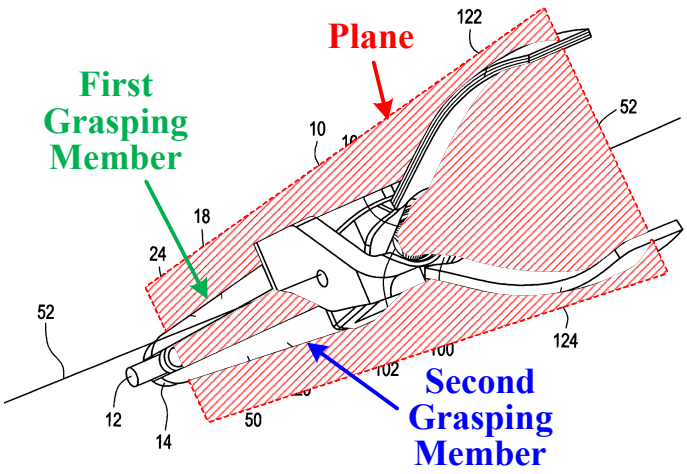

Thus, both the distal end 64 (*i.e.,* the claimed *rod contact member*) and the tube 60 (*i.e.,* the claimed *rotatable member*) are translatable within this plane defined by the first and second arms 24, 50 (*i.e.*, the claimed *first and second grasping members*).

2. Claim 18: "The rod reducing device of claim 16, wherein respective distal ends of the first and second grasping members include at least one grasping feature engageable with a portion of a bone anchor"

FIG. 6

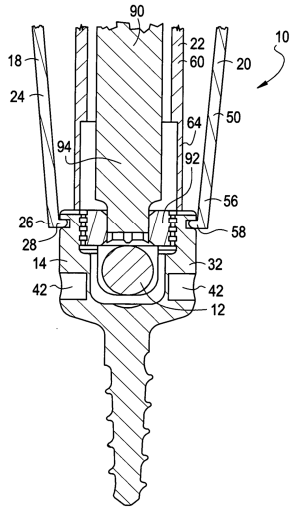

Whipple discloses the claimed "wherein respective distal ends of the first and second grasping members include at least one grasping feature engageable with a portion of a bone anchor" as recited in claim 18. For example, Whipple discloses that the first arm 24 (the claimed *first grasping member*) has "***a distal end 26*** configured to releasably engage a bone anchor" and the second arm 50 (the claimed *second grasping member*) has "***a distal end 56*** configured to releasably engage the bone anchor." *Id.* ¶¶ 28, 32 (emphasis added); FIG. 6, above. Whipple

further discloses that the distal ends 26, 56 of the first and second arms 24, 50 include ***radially inward facing projections 28, 58*** sized and shaped to engage bone anchor openings. *See, e.g., id.*

3. Claim 19: "The rod reducing device of claim 16, wherein distal movement of the rod contact member urges a rod towards distal ends of the first and second grasping members"

FIG. 13

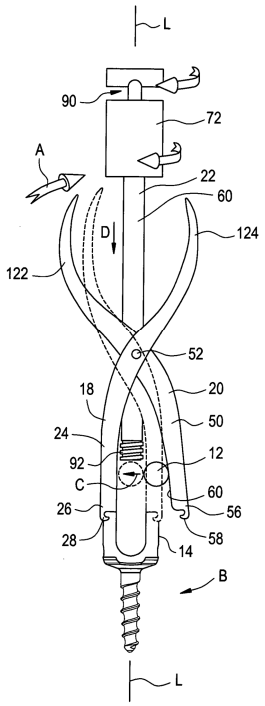

FIG. 11A

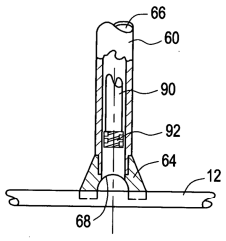

Whipple discloses the claimed "wherein distal movement of the rod contact member urges a rod towards distal ends of the first and second grasping members" as recited in claim 19. More specifically, Whipple discloses that "[r]otation of the tube 60 [the claimed *rotatable member*] relative to the collar 102 ***causes the tube 60 to advance distally . . . relative to the first arm 24 and the second arm 50*** [the

claimed *first and second grasping members*]. *Id.* ¶ 36 (emphasis added); FIG. 13, above. Whipple further discloses that "the distal end 64 [the claimed *rod contact member*] of the tube 60 may ***directly contact the spinal fixation element 12 to effect adjustment of the spinal fixation element 12***." *Id.* ¶ 35 (emphasis added); FIG. 11A, above.

As discussed above, the distal end 64 (the claimed *rod contact member*) is positioned at the distal end of the tube 60 (the claimed *rotatable member*). *See, e.g.,* FIG. 11A. Whipple also discloses that "***the tube 60*** [the claimed *rotatable member*] may be ***advanced distally in a second direction into contact with spinal fixation element 12*** [*e.g.*, the spinal rod], as indicated by arrow D." *Id.* ¶ 46 (emphasis added); FIG. 13, above. Whipple further discloses that "***advancement of the tube 60*** [the claimed *rotatable member*] ***toward the bone anchor 14 advances the spinal fixation element 12 toward the bone anchor 14*** until the spinal fixation element 12 is seated in the bone anchor 14." *Id.* ¶ 46 (emphasis added). Therefore, distal advancement of the tube 60 (the claimed *rotatable member*) toward the first and second arms 24, 50 (the claimed *first and second grasping members*) necessarily causes distal movement of the distal end 64 (the claimed *rod contact member*) and the spinal fixation element 12 (*e.g.*, the *spinal rod*) toward respective distal ends 26, 56 of the first and second arms 24, 50, as shown above in FIG. 13.

4. Claim 21: "The rod reducing member of claim 16, wherein a portion of the rod contact member is positioned between the first and second grasping members"

FIG. 6

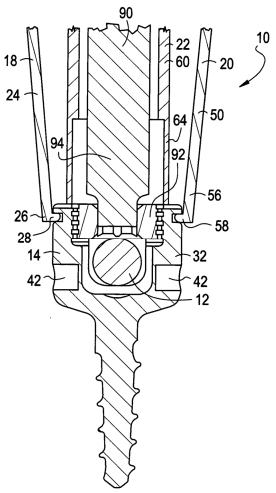

FIG. 11A

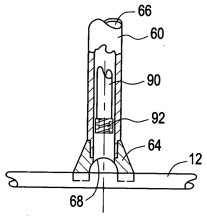

FIG. 13

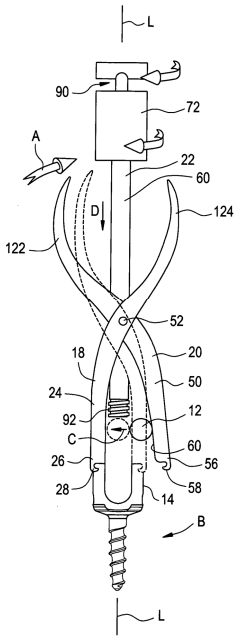

Whipple discloses the claimed "wherein a portion of the rod contact member is positioned between the first and second grasping members" as recited in claim 21. As discussed above, Whipple discloses that, in response to rotation, the tube 60 (the claimed *rotatable member*) advances distally relative to the first and second arms 25 and 50 (the claimed *first and second grasping members*). *See* ¶ 36; FIG. 13, above. Whipple further discloses that the ***distal end 64*** (the claimed *rod contact member*), which is positioned at the distal end of the tube 60 (the claimed *rotatable member*), directly contacts the spinal fixation element 12 (*e.g.*, the spinal rod). *See id.* ¶ 35; FIG. 11A, above. Additionally, FIGS. 6, 11A, and 13 of Whipple (above) depict a portion of the distal end 64 (the claimed *rod contact*

member) of the tube 60 positioned between the first and second arms 24, 50 (the claimed *first and second grasping members*).

5. Claim 22: "The rod reducing member of claim 16, wherein the rod contact member is attached to the distal end of the rotatable member"

FIG. 11A

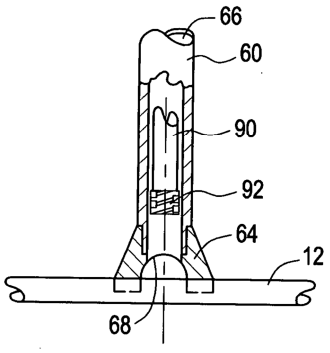

Whipple discloses the claimed "wherein the rod contact member is ***attached*** to the distal end of the rotatable member" as recited in claim 22. More specifically, as discussed above, Whipple discloses that the distal end 64 may be positioned at the distal-most end of the tube 60. *See, e.g.,* FIG. 11A, above. Furthermore, as shown above in FIG. 11, the distal end 64 (the claimed *rod contact member*) is joined to the distal-most end of the tube 60 (the claimed *rotatable member*) by way of a receiver portion configured to cooperate with the distal-most end of the tube 60. *See id.*

Petitioner notes that nothing in claim 22, or in any of the other Challenged Claims, requires the rod contact member to be "fixedly" or "securely" attached to the distal end of the rotatable member. As such, because the distal end 64 (the

claimed *rod contact member*) and the tube 60 (the claimed *rotatable member*) are ***joined*** together by way of respective cooperating structures, the distal end 64 is ***attached*** to the distal-most end of the tube 60.

B. Ground 2: Claim 22 Is Rendered Obvious by Whipple (ORT-1102) in View of Runco (ORT-1103)

Claim 22 of the '816 Patent is also rendered obvious by Whipple in view of Runco. Claim 22 depends from independent claim 16 and, as set forth above in Section VIII(A)(1), Whipple discloses each of the limitations of claim 16 (*i.e.*, limitations [16-1] through [16-7]).

Claim 22 recites, in part, "wherein the rod contact member is ***attached*** to the distal end of the rotatable member." (Emphasis added). As discussed above in Section VIII(A)(5), FIG. 11A of Whipple depicts the distal end 64 (the claimed *rod contact member*) ***joined*** to the distal-most end of the tube 60 (the claimed *rotatable member*) by way of respective cooperating structures. *See* ORT-1102, FIG. 11A, below. Furthermore, nothing in claim 22, or in any of the other Challenged Claims, requires the rod contact member to be "fixedly" or "securely" attached to the distal end of the rotatable member. Therefore, since the distal end 64 is joined to the distal-most end of the tube 60, it is also ***attached*** to the distal-most end of the tube 60.

FIG. 11A

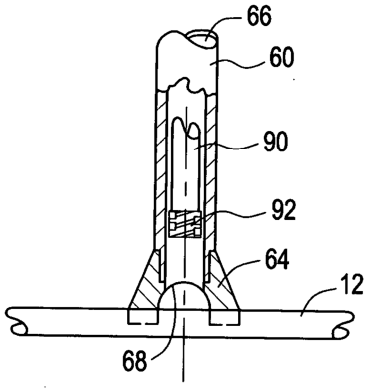

Should the Board, however, conclude that the distal end 64 (the claimed *rod contact member*) shown in FIG. 11A of Whipple is not ***attached*** to the tube 60 (the claimed *rotatable member*), or that claim 22 requires the claimed *rod contact member* to be "fixedly" attached to the distal end of the claimed *rotatable member*, such features are disclosed by Runco.

Runco was filed on September 26, 2005, and published on April 13, 2006, more than one year prior to the '816 Patent's earliest filing date of July 13, 2007. ORT-1103 at 1. Therefore, Runco is prior art under at least 35 U.S.C. § 102(b). Runco was never cited nor considered by the Examiner during prosecution of the '816 Patent. ORT-1101 at 1-2.

Similar to Whipple, Runco discloses rod reduction instruments configured to position a spinal rod within a rod-receiving portion of a bone anchor. *See, e.g.,* ORT-1103 ¶¶ 5-7. For example, Runco discloses "an instrument 400 for engaging an implant, such as a bone anchor, and positioning a fixation element, such as a

spinal rod, relative to the bone anchor." *Id.* ¶ 100. Runco discloses that the instrument 400 includes a rod adjusting tool 414. *Id.* ¶ 104. The rod adjusting tool 414 includes "***a distal component 419*** [the claimed *rod contact member*] ***having a rod engaging surface 421*** and a proximal component 423 [the claimed *rotatable member*] ***connectable to . . . the distal component 419***." *Id.* (emphasis added); FIG. 27C, below. Runco explains that "the proximal component 423 . . . includes an internal thread 433 for engaging [an] external thread 425 of the distal component 419." *Id.* ¶ 105. That is, Runco discloses a distal component 419 (*i.e.*, the *rod contact member*) ***attached*** to a proximal component 423 (*i.e.,* a *rotatable member*) by way of cooperating external and internal threads 425 and 433.

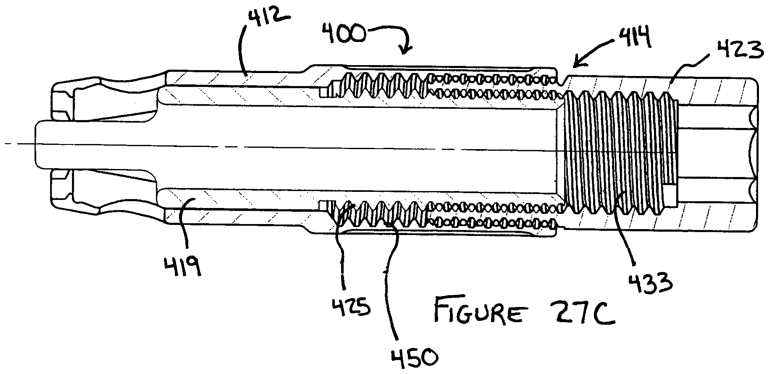

FIGURE 27C

It would have been obvious to a person of ordinary skill in the art to ***attach*** the distal end 64 (*i.e.*, the claimed *rod contact member*) shown in FIG. 11A of Whipple to the distal end of the tube 60 (*i.e.*, the claimed *rotatable member*), as taught by Runco. Such an arrangement would enable the distal end 64 (*i.e.*, the claimed *rod contact member*) shown in FIG. 11A to remain proximate to (*i.e.*, does

not separate from) the distal-most end the tube 60 (*i.e.*, the claimed rotatable member) during axial advancement and retraction of the distal end 64 and the tube 60. *See, e.g.,* ORT-1107 ¶ 81.

C. Ground 3: Claims 16, 18, 19, 21, and 22 Are Anticipated by Whipple (FIG. 11C) (ORT-1102)

FIG. 11A

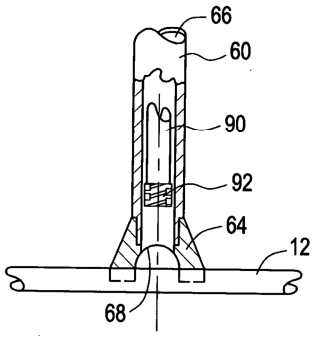

FIG. 11C

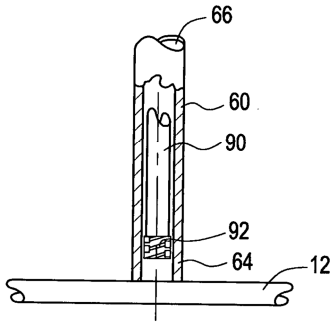

As set forth above in Section VIII(A) (*i.e.*, Ground 1), Whipple discloses a first arrangement of an instrument 10 (*i.e.*, the claimed *rod reduction device*) that anticipates claims 16, 18, 19, 21, and 22 of the '816 Patent as set forth in FIG. 11A. In that arrangement, Whipple discloses a separate distal end 64 feature (*i.e.*, the claimed *rod contact member*) that is connected to a distal-most end of the tube 60 (*i.e.*, the claimed rotatable member). *See, e.g.,* ORT-1102 ¶ 35; FIG. 11A, below.

Whipple also describes a second arrangement of the instrument 10 (*i.e.*, the claimed *rod reduction device*) that likewise anticipates claims 16, 18, 19, 21, and 22 of the '816 Patent as illustrated in FIG. 11C. In such arrangement, which is discussed in more detail below, Whipple discloses an integral structure (*i.e.*, the

tube 60) configured as both the claimed *rotatable member* ***and*** the claimed *rod contact member*. *See, e.g.,* FIG. 11C, above. In other words, the only relevant difference between this second arrangement (FIG. 11C) and the first arrangement (FIG. 11A) is that in this second arrangement the distal end 64 (*i.e.*, the claimed rod contact member) is integral with the tube 60 (*i.e.*, the claimed rotatable member).

1. Claim 16:

a. [16-PRE]: "A rod reducing device comprising"

FIG. 2

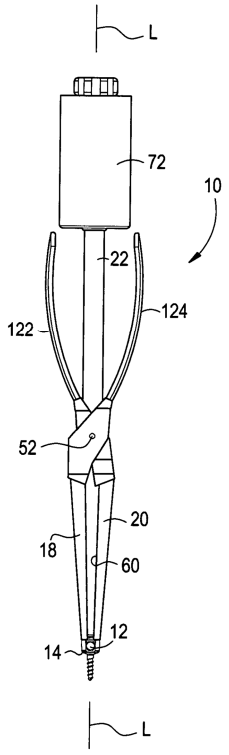

Whipple discloses the claimed "rod reducing device" as recited in claim 16. The second arrangement (*i.e.*, with FIG. 11C) is structurally no different from the

first arrangement (*i.e.*, with FIG. 11A) for purposes of the preamble, and, consequently, this second arrangement equally discloses the "rod reducing device," as discussed above in Section VIII(A)(1)(a). See ORT-1102 ¶ 26; FIGS. 2, 11C, above.

b. [16-1]: "a housing defining a longitudinal axis"

FIG. 2

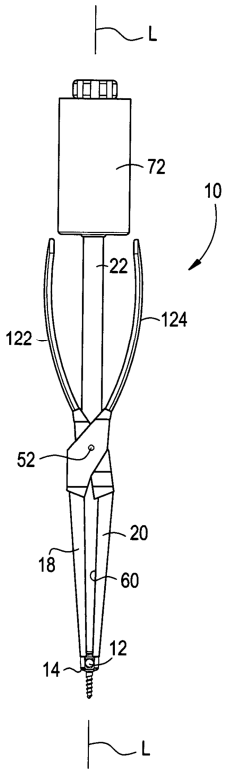

FIG. 4

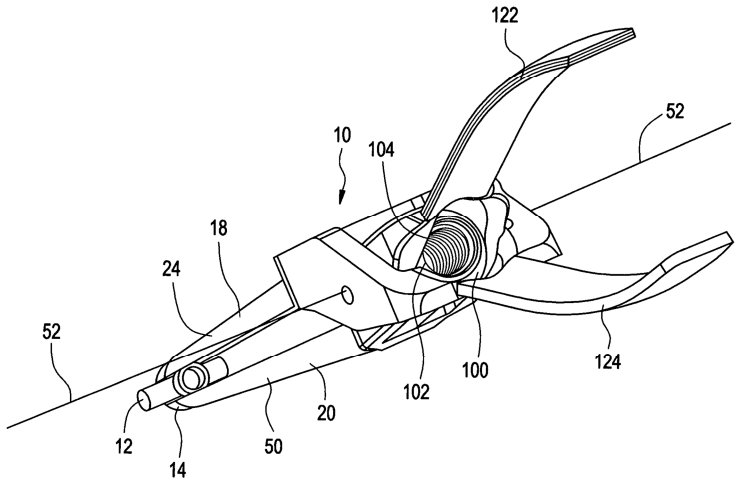

Whipple discloses the claimed "housing defining a longitudinal axis" as recited in claim 16. Again, the second arrangement (*i.e.*, with FIG. 11C) is structurally no different from the first arrangement (*i.e.*, with FIG. 11A) for purposes of this limitation, and, consequently, this second arrangement equally

discloses the "housing defining a longitudinal axis," as discussed above in Section VIII(A)(1)(b). *See* ORT-1102 ¶ 36; FIGS. 2, 4, above.

c. [16-2]: "the housing including first and second grasping members configured to grasp a portion of a bone anchor therebetween"

FIG. 4

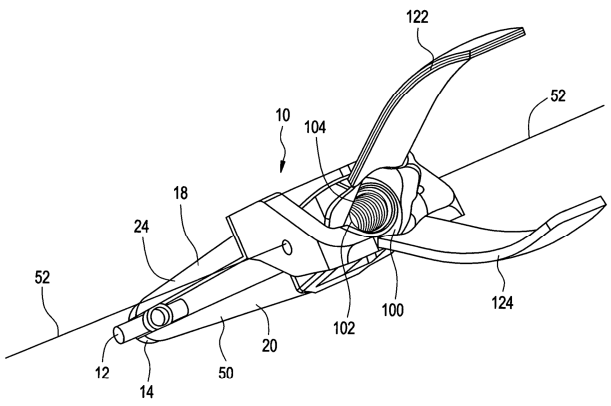

FIG. 5

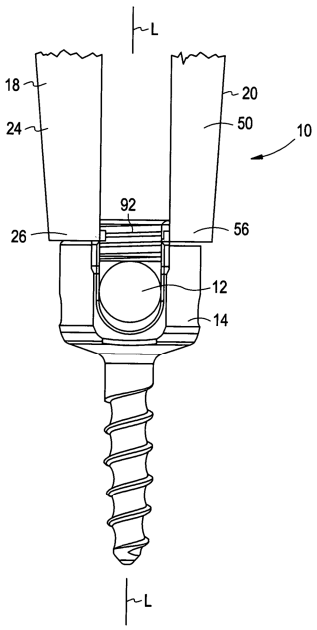

FIG. 6

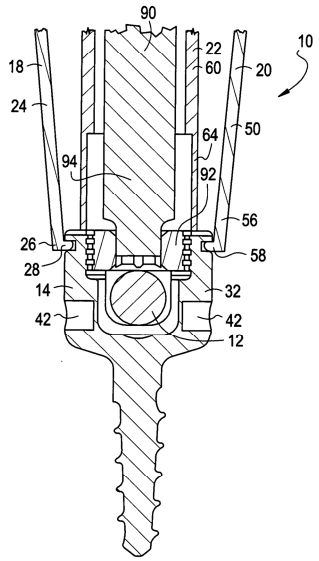

Whipple discloses the claimed "housing including first and second grasping members configured to grasp a portion of a bone anchor therebetween" as recited in claim 16. Again, the second arrangement (*i.e.*, with FIG. 11C) is structurally no different from the first arrangement (*i.e.*, with FIG. 11A) for purposes of this limitation, and, consequently, this second arrangement equally discloses the "housing including first and second grasping members configured to grasp a

portion of a bone anchor therebetween," as discussed above in Section VIII(A)(1)(c). *See* ORT-1102 ¶¶ 28, 32; FIGS. 4-6, above.

d. [16-3]: "the first and second grasping members defining a plane"

FIG. 2

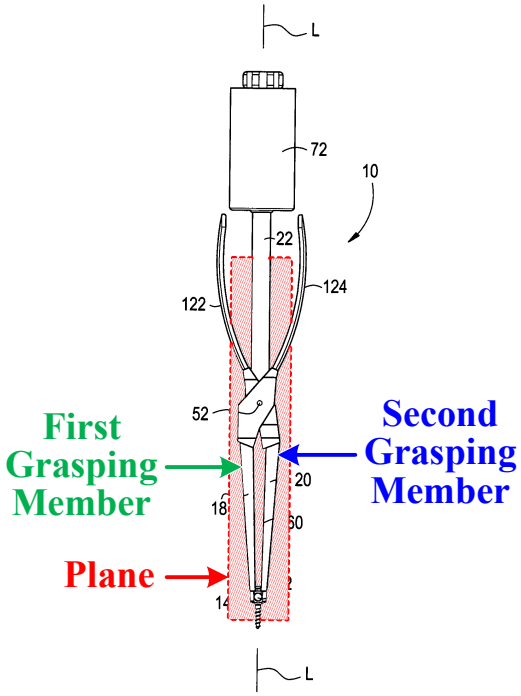

FIG. 4

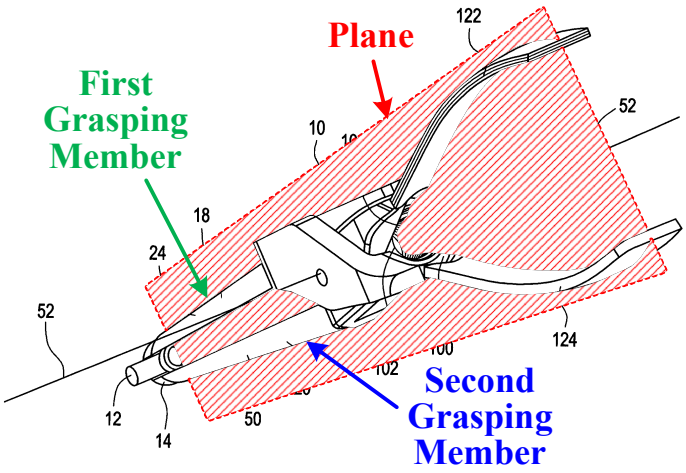

Whipple discloses the claimed "the first and second grasping members defining a plane" as recited in claim 16. Again, the second arrangement (*i.e.*, with FIG. 11C) is structurally no different from the first arrangement (*i.e.*, with FIG. 11A) for purposes of this limitation, and, consequently, this second arrangement equally discloses the "the first and second grasping members defining a plane," as discussed above in Section VIII(A)(1)(d). *See* ORT-1102 ¶¶ 53-54; FIGS. 2, 4, annotated above.

e. [16-4]: "a rotatable member extending through the housing along the longitudinal axis"

FIG. 1

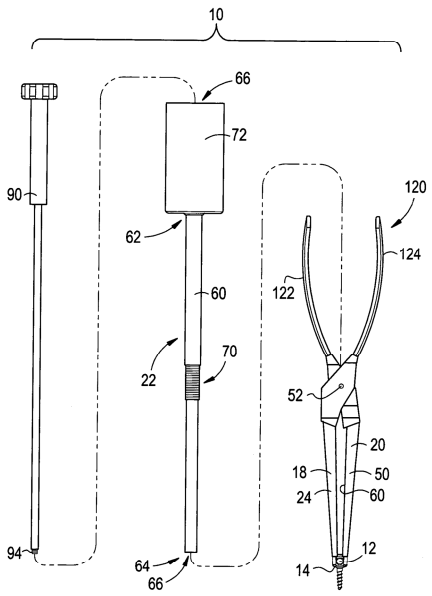

FIG. 4

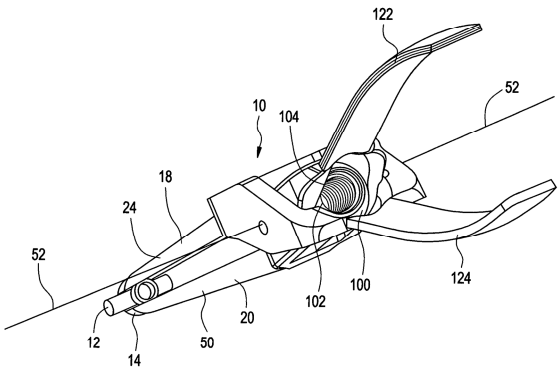

FIG. 13

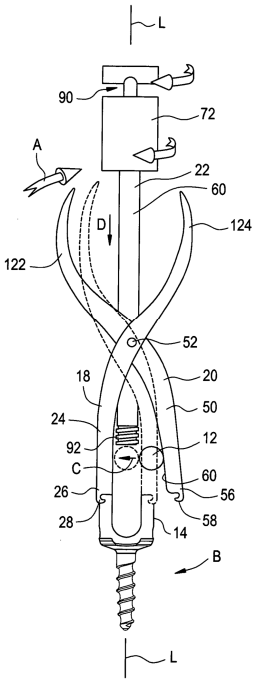

Whipple discloses the claimed "rotatable member extending through the housing along the longitudinal axis" as recited in claim 16. Again, the second arrangement (*i.e.*, with FIG. 11C) is structurally no different from the first arrangement (*i.e.*, with FIG. 11A) for purposes of this limitation, and, consequently, this second arrangement equally discloses the "rotatable member extending through the housing along the longitudinal axis," as discussed above in Section VIII(A)(1)(e). *See* ORT-1102 ¶ 36; FIGS. 2, 4, 13, above.

f. [16-5]: "a rod contact member positioned at a distal end of the rotatable member"

FIG. 1

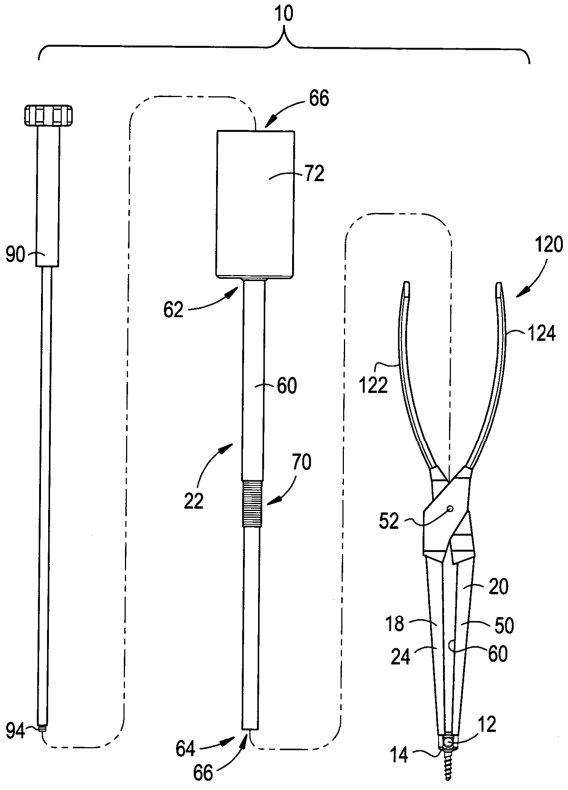

FIG. 11C

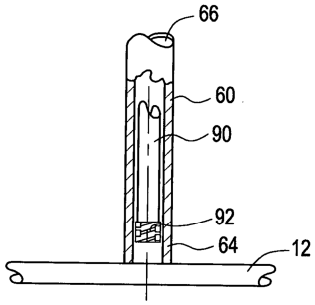

Whipple discloses "a rod contact member positioned at a distal end of the rotatable member" as recited in claim 16. For example, as shown above in FIGS. 1 and 11C, the distal end 64 of Whipple is an integral component of (*i.e.*, attached to) the tube 60 and, as a result, is ***positioned*** at the distal end of the tube 60.

As also discussed above, Whipple discloses that this tube 60 includes a proximal end 62 and a distal end 64, wherein the distal end "***may directly contact the spinal fixation element 12*** [*i.e.*, the spinal rod] to effect adjustment of the spinal fixation element 12." *See id.* ¶ 35 (emphasis added); FIGS. 1 and 11C,

above. As with the first arrangement involving FIG. 11A, this distal end 64 is likewise the claimed "rod contact member" in the second arrangement involving FIG. 11C.

Again, Petitioner notes that nothing in claim 16, or in any of the other Challenged Claims, requires the claimed *rod contact member* (*i.e.*, the distal end 64 of Whipple) to be a separate and distinct component (*i.e.*, non-integral) from the claimed *rotatable member* (*i.e.*, the tube 60 of Whipple).

g. [16-6]: "the rod contact member translatable along the longitudinal axis in response to rotation of the rotatable member about the longitudinal axis"

FIG. 13

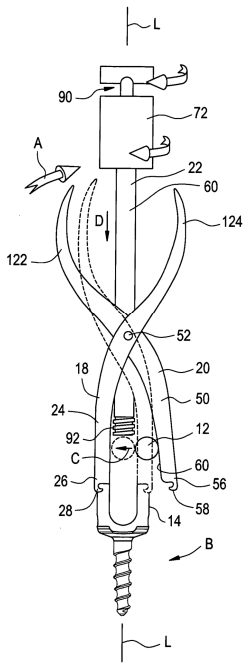

FIG. 11C

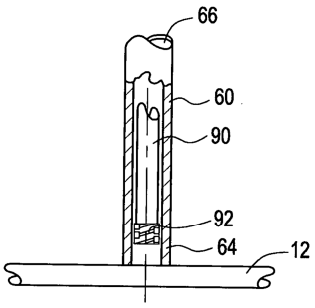

Whipple discloses the claimed "rod contact member translatable along the longitudinal axis in response to rotation of the rotatable member about the

longitudinal axis" as recited in claim 16. For example, Whipple states that "***[r]otation of the tube 60*** [the claimed *rotatable member*] relative to the collar 102 causes the tube 60 to advance distally or proximally, depending on the direction of rotation, relative to the first arm 24 and the second arm 50 [the claimed *first and second grasping members*]. *Id.* ¶ 36 (emphasis added); FIG. 13, above.

Whipple also states that "[u]pon vertical alignment of the spinal fixation element 12 [*e.g.*, the spinal rod] with ***the longitudinal axis L*** of the instrument and the bone anchor, the tube 60 may be ***advanced distally*** in a second direction into contact with spinal fixation element 12, as indicated by arrow D." *Id.* ¶ 46; FIG. 13, above. Because the distal end 64 (the claimed *rod contact member*) is an integral component of (*i.e.*, attached to) the tube 60 (the claimed *rotatable member*), as shown in FIG. 11C, the distal end 64 also advances distally along the longitudinal axis L in response to rotation of the tube 60 about the longitudinal axis L.

h. [16-7]: "wherein the rod contact member and the rotatable member are translatable within the plane defined by the first and second grasping members"

FIG. 13

FIG. 9

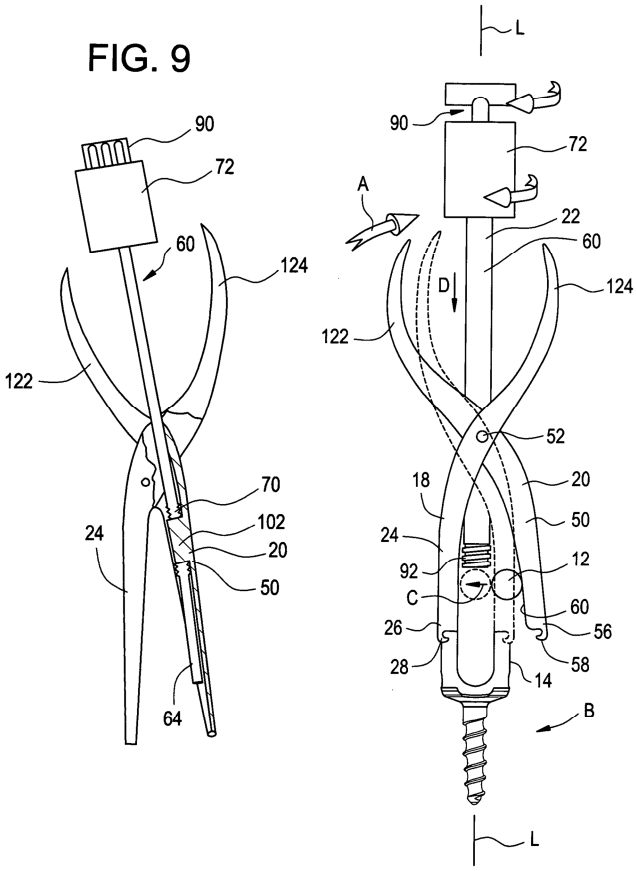

FIG. 11C

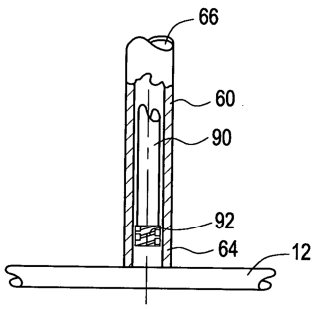

Whipple discloses the claimed "rod contact member and the rotatable member are translatable within the plane defined by the first and second grasping members" as recited in claim 16. As illustrated below in annotated FIGS. 2 and 4, the first and second arms 24, 50 (*i.e.,* the claimed *first and second grasping members*) of Whipple implicitly define a plane. *Id.* FIGS. 2 and 4, below (annotated). As discussed above, Whipple discloses that "***[r]otation of the tube 60*** [the claimed *rotatable member*] . . . ***causes the tube 60 to advance distally*** or

proximally . . . relative to the first arm 24 and the second arm 50 [the claimed *first and second grasping members*]." *Id.* ¶ 36 (emphasis added); FIG. 13, above.

Additionally, because the distal end 64 (the claimed *rod contact member*) in this second arrangement is an integral component of the tube 60 (the claimed *rotatable member*), it too advances distally relative to the first and second arms 24, 50 (the claimed *first and second grasping members*]. For example, as shown in FIGS. 9 and 13, the distal end 64 and tube 60 are disposed between and translatable within the first and second arms 24, 50.

FIG. 2

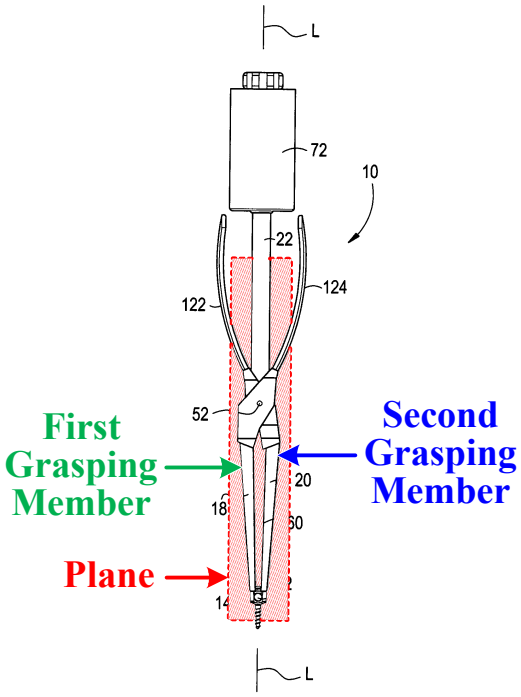

FIG. 4

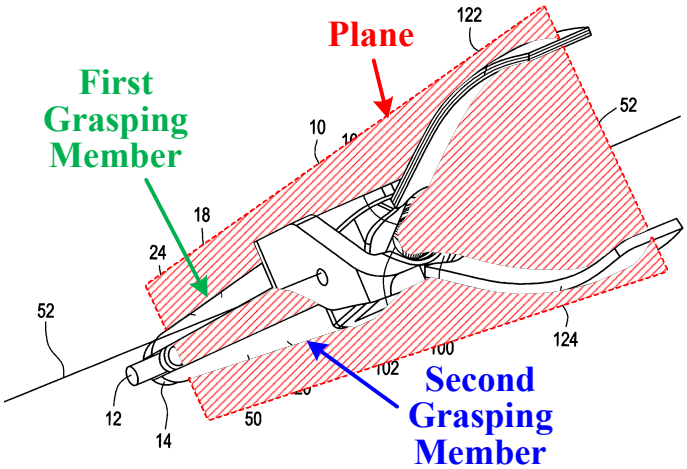

Thus, both the distal end 64 (*i.e.,* the claimed *rod contact member*) and the tube 60 (*i.e.,* the claimed *rotatable member*) are translatable within this plane

defined by the first and second arms 24, 50 (*i.e.*, the claimed *first and second grasping members*).

2. Claim 18: "The rod reducing device of claim 16, wherein respective distal ends of the first and second grasping members include at least one grasping feature engageable with a portion of a bone anchor"

FIG. 6

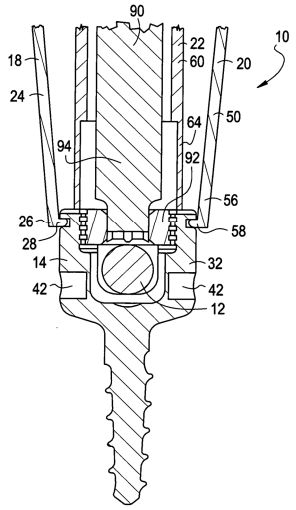

Whipple discloses the claimed "wherein respective distal ends of the first and second grasping members include at least one grasping feature engageable with a portion of a bone anchor" as recited in claim 18. Again, the second arrangement (*i.e.*, with FIG. 11C) is structurally no different from the first arrangement (*i.e.*, with FIG. 11A) for purposes of this limitation, and, consequently, this second arrangement equally discloses the "wherein respective distal ends of the first and second grasping members include at least one grasping feature engageable with a portion of a bone anchor," as discussed above in Section VIII(A)(2). *See* ORT-1102 ¶¶ 28, 32; FIG. 6, above.

3. Claim 19: "The rod reducing device of claim 16, wherein distal movement of the rod contact member urges a rod towards distal ends of the first and second grasping members"

FIG. 13

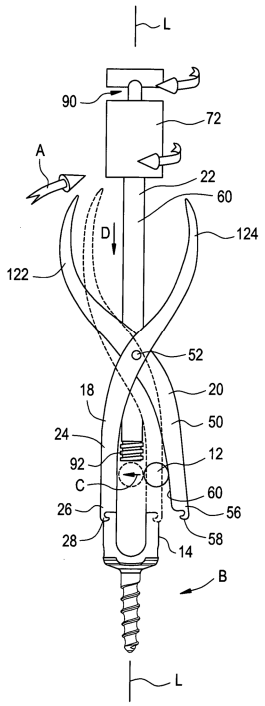

FIG. 11C

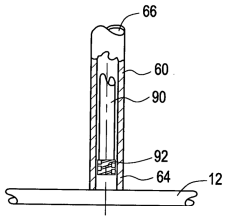

Whipple discloses the claimed "wherein distal movement of the rod contact member urges a rod towards distal ends of the first and second grasping members" as recited in claim 19. More specifically, Whipple discloses that "[r]otation of the tube 60 [the claimed *rotatable member*] relative to the collar 102 ***causes the tube 60 to advance distally . . . relative to the first arm 24 and the second arm 50*** [the claimed *first and second grasping members*]. *Id.* ¶ 36 (emphasis added); FIG. 13, above. Whipple further discloses that "the distal end 64 [the claimed *rod contact member*] of the tube 60 may ***directly contact the spinal fixation element 12 to***

effect adjustment of the spinal fixation element 12." *Id.* ¶ 35 (emphasis added); FIG. 11A, above.

As discussed above, the distal end 64 (the claimed *rod contact member*) in this second arrangement is an integral component of the tube 60 (the claimed *rotatable member*) and, as a result, is ***positioned*** at the distal end of the tube 60 (the claimed *rotatable member*). Whipple also discloses that "***the tube 60*** [the claimed *rotatable member*] may be ***advanced distally in a second direction into contact with spinal fixation element 12*** [*e.g.*, the spinal rod], as indicated by arrow D." *Id.* ¶ 46 (emphasis added); FIG. 13, above. Whipple further discloses that "***advancement of the tube 60*** [the claimed *rotatable member*] ***toward the bone anchor 14 advances the spinal fixation element 12 toward the bone anchor 14*** until the spinal fixation element 12 is seated in the bone anchor 14." *Id.* ¶ 46 (emphasis added). Therefore, distal advancement of the tube 60 (the claimed *rotatable member*) toward the first and second arms 24, 50 (the claimed *first and second grasping members*) necessarily causes distal movement of the distal end 64 (the claimed *rod contact member*) and the spinal fixation element 12 (*e.g.*, the spinal rod) toward respective distal ends 26, 56 of the first and second arms 24, 50, as shown above in FIG. 13.

4. Claim 21: "The rod reducing member of claim 16, wherein a portion of the rod contact member is positioned between the first and second grasping members"

FIG. 13

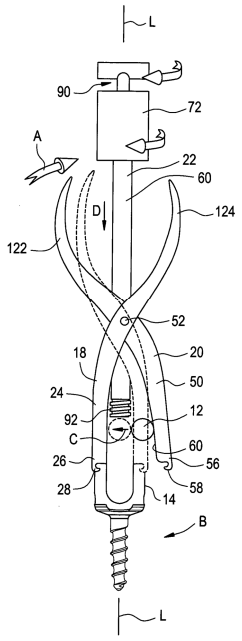

FIG. 11C

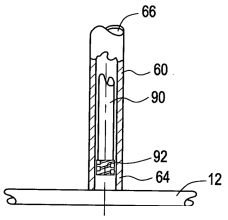

Whipple discloses the claimed "wherein a portion of the rod contact member is positioned between the first and second grasping members" as recited in claim 21. As discussed above, in the second arrangement, Whipple discloses that the ***distal end 64***, a component of the tube 60, directly contacts the spinal fixation element 12 (*e.g.*, the spinal rod). *See id.* ¶ 35; FIG. 11C. Thus, when the tube 60 (the claimed *rotatable member*) is extended through the coupling mechanism 100 as shown in FIG. 13, the distal end 64 (the claimed *rod contact member*) is positioned between the first and second arms 24, 50 (the claimed *first and second grasping members*).

5. Claim 22: "The rod reducing member of claim 16, wherein the rod contact member is attached to the distal end of the rotatable member"

Whipple discloses the claimed "wherein the rod contact member is ***attached*** to the distal end of the rotatable member" as recited in claim 22. More specifically, as discussed above, Whipple discloses that the distal end 64 is an integral component of the tube 60. *See, e.g.,* ORT-1102 ¶ 35; FIGS. 1, 11C. Petitioner again notes that nothing in claim 22, or in any of the other Challenged Claims, precludes an integral structure (*e.g.*, the tube 60 of Whipple) including both the claimed *rotatable member* (*i.e.*, the proximal portion of the tube 60) and the claimed *rod contact member* (*i.e.*, the distal end 64 of the tube 60). Therefore, since the distal end 64 (*i.e.*, the claimed *rod contact member*) is an integral to the tube 60 (*i.e.*, the claimed *rotatable member*), the distal end 64 is ***attached*** to the tube 60.

D. Ground 4: Claims 16, 18, 19, 21 and 22 Are Rendered Obvious by Whipple (ORT-1102) in view of Runco (ORT-1103)

As set forth above in Section VIII(C), Whipple describes a second arrangement of an instrument 10 (*i.e.*, the claimed *rod reduction device*) as shown in FIG. 11C that anticipates claims 16, 18, 19, 21, and 22 of the '816 Patent. In that analysis, an integral structure (*i.e.*, the tube 60) disclosed both the claimed *rotatable member* (*i.e.*, the proximal portion of the tube 60) and the claimed *rod contact member* (*i.e.*, the distal end 64 of the tube 60).

As discussed above, nothing in any of the Challenged Claims requires the claimed *rod contact member* (*i.e.*, the distal end 64 of Whipple) to be a separate and distinct component from the claimed *rotatable member* (*e.g.*, the tube 60 of Whipple). Should the Board, however, conclude that the Challenged Claims require the claimed *rod contact member* (*i.e.*, the distal end 64 of Whipple) to be a separate and distinct component (*i.e.*, non-integral) from the claimed *rotatable member* (*e.g.*, the tube 60), it would have been obvious to a person of ordinary skill in the art to modify Whipple to make its distal end 64 a separate (non-integral) component that is attached to the tube 60 in view of the disclosure of Whipple in view of Runco, as discussed in more detail below.

1. Claim 16:

For the reasons discussed above in Sections VIII(C)(1)(a)-(e), Whipple discloses the following limitations of independent claim 16: "[a] rod reducing device comprising" (16-PRE), "a housing defining a longitudinal axis" (16-1), "the housing including first and second grasping members configured to grasp a portion of a bone anchor therebetween" (16-2), "the first and second grasping members defining a plane" (16-3), and "a rotatable member extending through the housing along the longitudinal axis" (16-4). *See* Sections VIII(C)(1)(a)-(e). The remaining limitations of claim 16 (*e.g.*, limitations [16-5] through [16-7] are discussed in more detail below.

a. [16-5]: "a rod contact member positioned at a distal end of the rotatable member"

FIG. 1

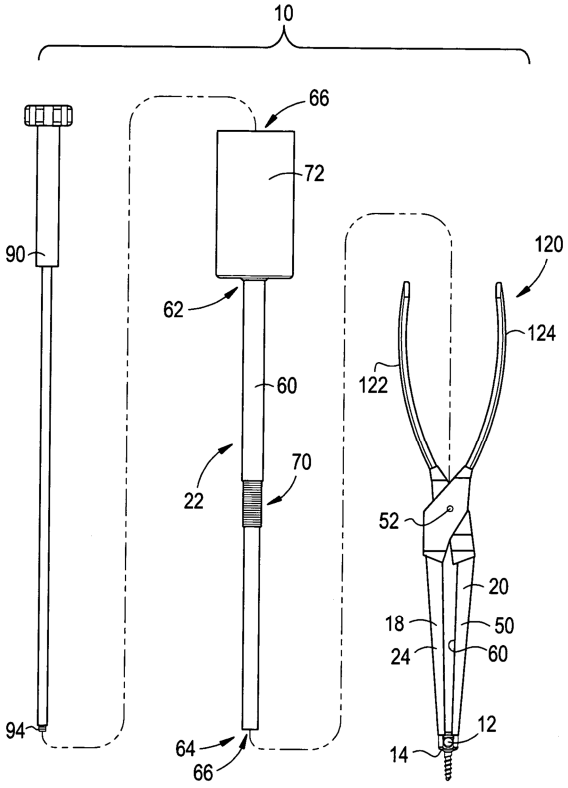

FIG. 11C

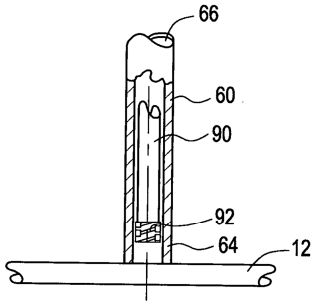

Whipple in view of Runco discloses "a rod contact member positioned at a distal end of the rotatable member" as recited in claim 16. For example, in FIG. 11C, Whipple discloses that the tube 60 (*i.e.*, the claimed *rotatable member*) of the adjustment mechanism 22 comprises a proximal end 62 and ***a distal end 64*** (*i.e.*, the claimed *rod contact member*), which "***may directly contact the spinal fixation element 12*** [*i.e.*, the spinal rod] to effect adjustment of the spinal fixation element 12." *See id.* ¶ 35 (emphasis added); FIGS. 1 and 11C, above. The distal end 64 (the claimed *rod contact member*) of Whipple is an integral component of (*i.e.*,

attached to) the tube 60 (the claimed *rotatable member*) and, as a result, is ***positioned*** at the distal end of the tube 60 (the claimed *rotatable member*). *Id*.

As discussed, nothing in claim 16, or in any of the other Challenged Claims, requires the claimed *rod contact member* (*i.e.*, the distal end 64 of Whipple) to be a separate and distinct component from the claimed *rotatable member* (*e.g.*, the tube 60 of Whipple). Should it be determined, however, that the Challenged Claims require the claimed *rod contact member* to be a separate and distinct component from the claimed *rotatable member* (*i.e.*, the tube 60 of Whipple), such an arrangement would have been obvious to a person of ordinary skill in the art in view of the combined disclosures of Whipple and Runco, as discussed in more detail below.

As discussed above, Runco discloses an instrument 400 including a rod adjusting tool 414. ORT-1103 ¶ 104. The rod adjusting tool 414 includes "***a distal component 419*** [the *rod contact member*] ***having a rod engaging surface 421*** and a proximal component 423 [the *rotatable member*] ***connectable to . . . the distal component 419***." *Id.* (emphasis added); FIG. 27C, below. As shown in FIG. 27C below, the distal component 419 (*i.e.*, the *rod contact member*) of Runco is positioned at the distal end of the proximal component 423 (*i.e.,* the *rotatable member*).

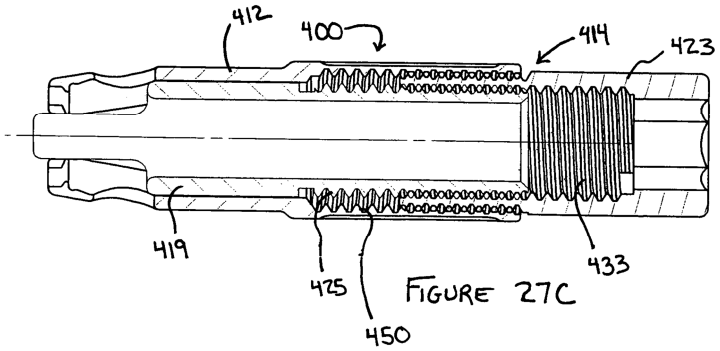

FIGURE 27C

It would have been obvious to a person of ordinary skill in the art to modify the tube 60 of Whipple by separating the distal end 64 (*i.e.,* the claimed *rod contact member*) from the rest of the tube 60 (*i.e.*, the claimed *rotatable member*) to create two separate and distinct components that are connectable to each other as taught by Runco. *See also In re Dulberg*, 289 F.2d 522, 523 (C.C.P.A. 1961). Such a modification would have been obvious to a person of ordinary skill in the art because it would result in an arrangement would permit the distal end 64 (*i.e.,* the claimed *rod contact member*) of Whipple to linearly or axially translate in a distal direction but remain rotationally fixed relative to the tube 60 (*i.e.*, the claimed *rotatable member*). *See, e.g.*, ORT-1103 ¶ 1104; *see also* ORT-1107 ¶ 104. By allowing the distal end 64 to remain rotationally fixed relative to the tube 60 (and thus the rod), such a modification reduces friction that would be caused by the rotation of the distal end 64 against the rod during the reduction of the rod into the bone anchor.

b. [16-6]: "the rod contact member translatable along the longitudinal axis in response to rotation of the rotatable member about the longitudinal axis"

FIG. 13

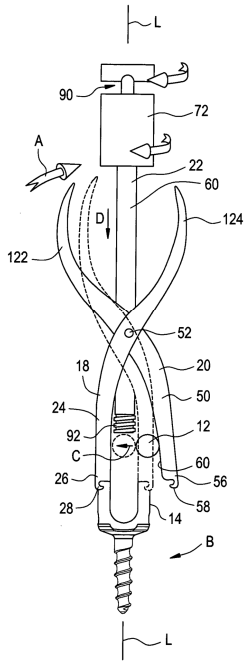

Whipple in view of Runco discloses the claimed "rod contact member translatable along the longitudinal axis in response to rotation of the rotatable member about the longitudinal axis" as recited in claim 16. For example, as discussed in Section VIII(C)(1)(g) above, Whipple discloses that rotation of the tube 60 (*i.e.*, the claimed *rotatable member*) causes the tube 60 to advance distally in a direction 'D' along the longitudinal axis L. *See, e.g.,* ORT-1102 ¶¶ 36, 46; FIG. 13, above.

Because the distal end 64 (the claimed *rod contact member*) is positioned at the distal end of the tube 60 (the claimed *rotatable member*), it too advances

distally along the longitudinal axis L in response to rotation of the tube 60 about the longitudinal axis L.

c. [16-7]: "wherein the rod contact member and the rotatable member are translatable within the plane defined by the first and second grasping members"

FIG. 9

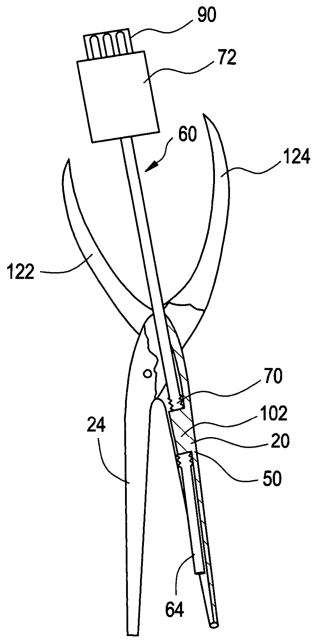

FIG. 13

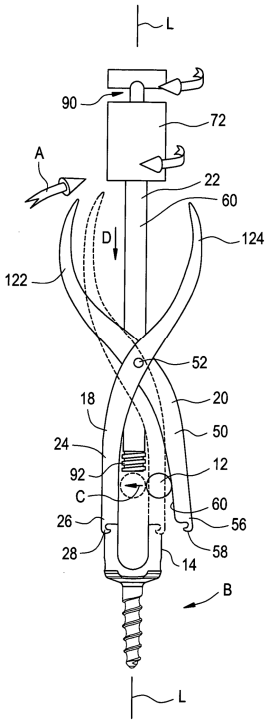

Whipple in view of Runco discloses the claimed "rod contact member and the rotatable member are translatable within the plane defined by the first and second grasping members" as recited in claim 16. For example, as discussed in Section VIII(C)(1)(h) above, Whipple discloses that rotation of the tube 60 (*i.e.*, the claimed *rotatable member*) causes the tube 60 to advance distally in a direction 'D' relative to the first and second arms 24, 50 (*i.e.,* the claimed *first and second grasping members*). *See, e.g., Id.* ¶¶ 36, 46; FIG. 13, above.

Additionally, because the distal end 64 (the claimed *rod contact member*) is positioned at the distal end of the tube 60 (the claimed *rotatable member*), it too advances distally relative to the first and second arms 24, 50 (the claimed *first and second grasping members*]. For example, as shown in FIGS. 9 and 13 above, the distal end 64 (the claimed *rod contact member*) and the tube 60 (the claimed *rotatable member*) are disposed between and translatable within the first and second arms 24, 50 (the claimed *first and second grasping members*).

As discussed above in Section VIII(C)(1)(d), the first and second arms 24, 50 (*i.e.,* the claimed *first and second grasping members*) of Whipple implicitly define a plane. *Id.* FIG. 2, below (annotated).

FIG. 2

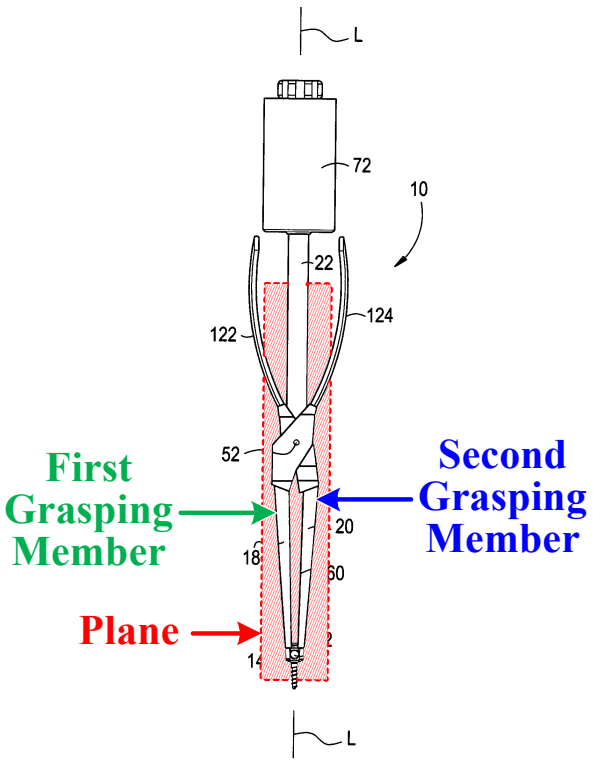

As illustrated above in annotated FIG. 2, both the distal end 64 (*i.e.,* the claimed *rod contact member*) and the tube 60 (*i.e.,* the claimed *rotatable member*) are translatable within this plane defined by the first and second arms 24, 50 (*i.e.*, the claimed *first and second grasping members*).

2. Claim 18: "The rod reducing device of claim 16, wherein respective distal ends of the first and second grasping members include at least one grasping feature engageable with a portion of a bone anchor"

FIG. 6

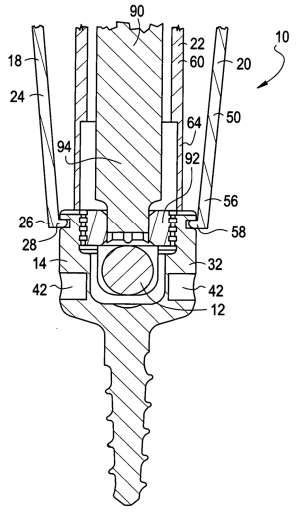

Whipple in view of Runco discloses the claimed "wherein respective distal ends of the first and second grasping members include at least one grasping feature engageable with a portion of a bone anchor" as recited in claim 18. For example, Whipple discloses that the first arm 24 (the claimed *first grasping member*) has "***a distal end 26*** configured to releasably engage a bone anchor" and the second arm 50 (the claimed *second grasping member*) has "***a distal end 56*** configured to releasably engage the bone anchor." *Id.* ¶¶ 28, 32 (emphasis added); FIG. 6,

above. Whipple further discloses that the distal ends 26, 56 of the first and second arms 24, 50 include ***radially inward facing projections 28, 58*** sized and shaped to engage bone anchor openings. *See, e.g., id.*

3. Claim 19: "The rod reducing device of claim 16, wherein distal movement of the rod contact member urges a rod towards distal ends of the first and second grasping members"

FIG. 13

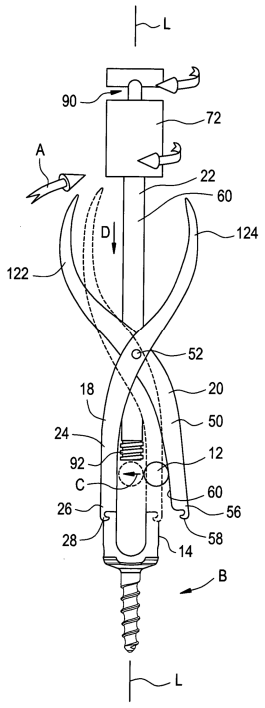

FIG. 11C

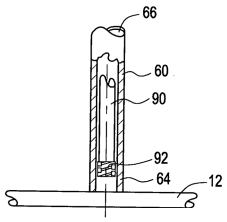

Whipple in view of Runco discloses the claimed "wherein distal movement of the rod contact member urges a rod towards distal ends of the first and second grasping members" as recited in claim 19. For example, as discussed in Section VIII(D)(1)(c) above, Whipple discloses that rotation of the tube 60 (*i.e.*, the claimed *rotatable member*) causes the tube 60 to advance distally in a direction 'D'

relative to the first and second arms 24, 50 (*i.e.,* the claimed *first and second grasping members*). *See, e.g., Id.* ¶¶ 36, 46; FIG. 13, above. Whipple further discloses that the distal end 64 (*i.e.*, the claimed *rod contact member*) "***may directly contact the spinal fixation element 12*** [*i.e.*, the spinal rod] ***to effect adjustment*** of the spinal fixation element 12." *See id.* ¶ 35 (emphasis added); FIGS. 11C and 13, above.

As discussed above, the distal end 64 (the claimed *rod contact member*) of Whipple is positioned at the distal end of the tube 60 (the claimed *rotatable member*) and, as a result, distal advancement of the tube 60 (the claimed *rotatable member*) toward the first and second arms 24, 50 (the claimed *first and second grasping members*) necessarily causes distal movement of the distal end 64 (the claimed *rod contact member*) and the spinal fixation element 12 (*e.g.*, the *spinal rod*) toward respective distal ends 26, 56 of the first and second arms 24, 50 as shown in FIG. 13.

4. Claim 21: "The rod reducing member of claim 16, wherein a portion of the rod contact member is positioned between the first and second grasping members"

FIG. 13

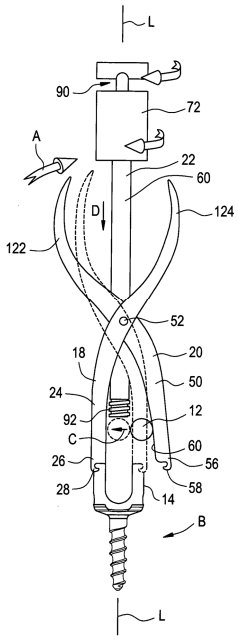

Whipple in view of Runco discloses the claimed "wherein a portion of the rod contact member is positioned between the first and second grasping members" as recited in claim 21. As discussed above, Whipple discloses that the distal end 64 (the claimed *rod contact member*) is positioned at the distal-most end of the tube 60 (the claimed *rotatable member*). Thus, when the tube 60 (the claimed *rotatable member*) is extended through the coupling mechanism 100 as shown in FIG. 13, the distal end 64 (the claimed *rod contact member*) is positioned between the first and second arms 24, 50 (the claimed *first and second grasping members*).

5. Claim 22: "The rod reducing member of claim 16, wherein the rod contact member is attached to the distal end of the rotatable member"

Whipple in view of Runco discloses the claimed "wherein the rod contact member is ***attached*** to the distal end of the rotatable member" as recited in claim 22. More specifically, as discussed above, the combination of Whipple and Runco discloses a separate *rod contact member* (*i.e.,* the distal end 64 of Whipple) attached at a distal-most end of the *rotatable member* (*i.e.,* the tube 60 of Whipple). As further discussed above, Runco discloses that "the proximal component 423 . . . includes an internal thread 433 for engaging [an] external thread 425 of the distal component 419." ORT-1103 ¶ 105.

That is, Runco discloses a distal component 419 (*i.e.*, a *rod contact member*) ***attached*** to a proximal component 423 (*i.e.,* a *rotatable member*) by way of cooperating external and internal threads 425 and 433. Therefore, in view of Runco, it would have been obvious to modify Whipple such that its distal end 64 (the claimed *rod contact member*) is a separate component (non-integral) from the tube 60 (the claimed *rotatable member*) that is threadably attached to the distal-most end of the tube 60 using similar cooperating external and internal threads as disclosed in Runco to permit the rotable member to rotate relative to the rod contact member, and yet, allow the two to stay connected upon retraction or removal of the device.

E. Ground 5: Claims 16, 18, 19, and 21 are Anticipated by Varieur (ORT-1104)

Varieur likewise anticipates claims 16, 18, 19, and 21 of the '816 Patent. Varieur was filed on December 15, 2004, and published on July 7, 2005, more than one year prior to the '816 Patent's earliest filing date of July 13, 2007. ORT-1104 at 1. Therefore, Varieur is prior art under at least 35 U.S.C. § 102(b). Varieur was never cited nor considered by the Examiner during prosecution of the '816 Patent. ORT-1101 at 1-2.

Varieur discloses rod reduction instruments configured to position a spinal rod within a rod-receiving portion of a bone anchor. *See, e.g.,* ORT-1104 ¶¶ 5-7. For example, Varieur discloses "an instrument 400 for engaging an implant, such as a bone anchor, and positioning a fixation element, such as a spinal rod, relative to the bone anchor." *Id.* ¶ 100.

1. Claim 16:

a. [16-PRE]: "A rod reducing device comprising"

FIG. 2

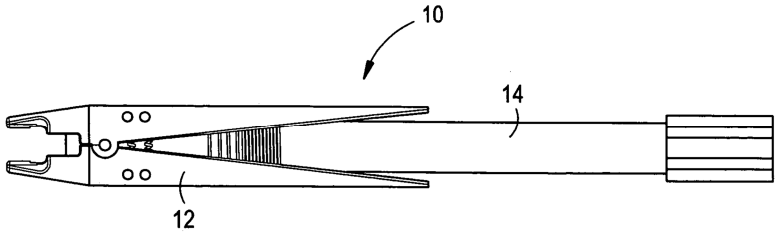

Varieur discloses the claimed "rod reducing device." For example, Varieur discloses "***an instrument 10 for*** engaging an implant, such as a bone anchor, and

positioning a fixation element, such as ***a spinal rod***, ***relative to the bone anchor***." *Id.* ¶ 31 (emphasis added); FIG. 2, above.

b. [16-1]: "a housing defining a longitudinal axis"

FIG. 4

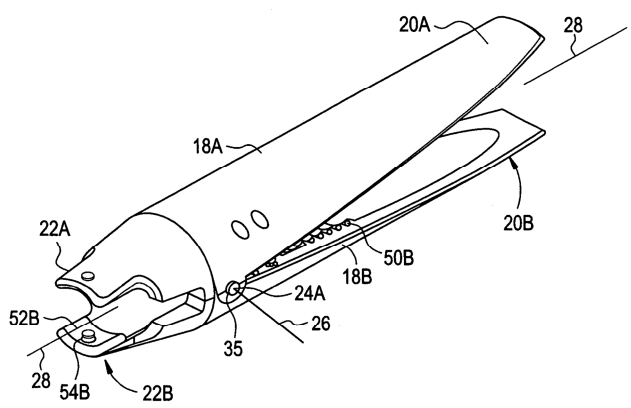

FIG. 10

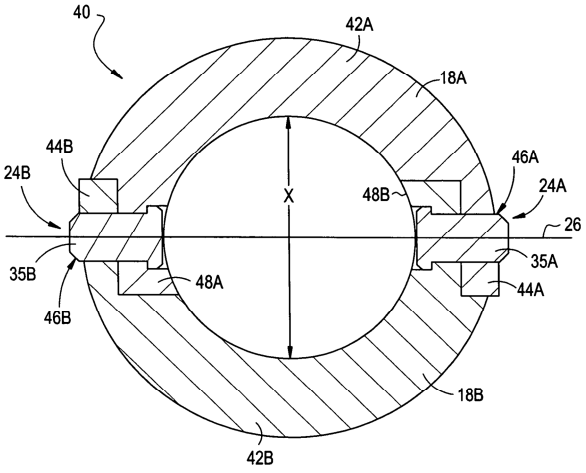

Varieur discloses "a housing" as recited in claim 16. For example, Varieur discloses "***a first jaw member 18A and a second jaw member 18B*** [collectively, the claimed *housing*]" that "when pivotally connected, may form an annular collar 40." *Id.* ¶¶ 32, 34; FIGS. 4, 10, above. Varieur further discloses that the first and second jaw members 18A, 18B (the claimed *housing*) each "include an arcuate section 42A,42B that may engage to form collar 40." *Id.*

Varieur also discloses that the "housing" defines "a longitudinal axis" as recited in claim 16. More specifically, Varieur discloses that "[t]he pivot axis 26 [of the first and second jaw members 18A, 18B (collectively, the claimed

housing)] . . . is oriented generally perpendicular to ***the longitudinal axis 28*** of the bone anchor engaging tool 12." *Id.* ¶ 33 (emphasis added); FIG. 4, above.

c. [16-2]: "the housing including first and second grasping members configured to grasp a portion of a bone anchor therebetween"

FIG. 16A

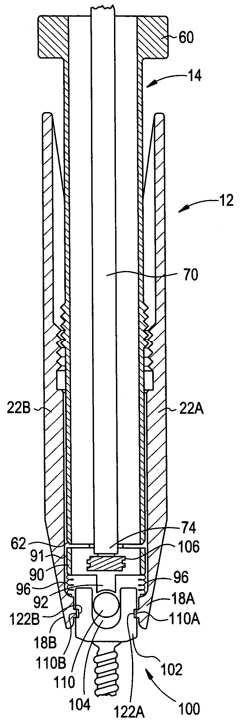

FIG. 4

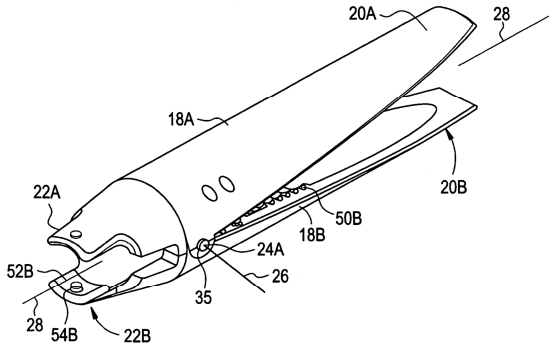

Varieur discloses the claimed "housing including first and second grasping members configured to grasp a portion of a bone anchor therebetween" as recited in claim 16. In particular, Varieur discloses that "[t]he first jaw member 18A and the second jaw member 18B ***each have . . . a distal end 22A,B*** (the claimed *first and second grasping members*)" *Id.* ¶ 33 (emphasis added); FIG. 4, above. Varieur further states that "***distal ends 22A,B*** of the jaw members 18A,B may be separated a distance D . . . ***to facilitate engagement of an implant when the distal***

ends 22A,B of the jaw members 18A,B are in the approximately closed position." *Id.* ¶ 33 (emphasis added); FIGS. 4, 16A, above.

d. [16-3]: "the first and second grasping members defining a plane"

FIG. 4

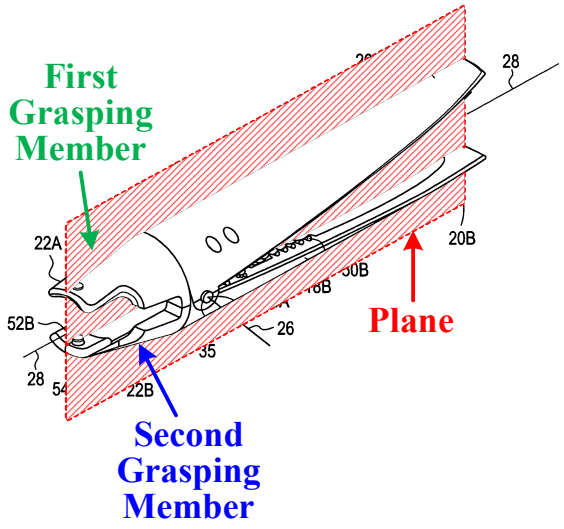

FIG. 16A

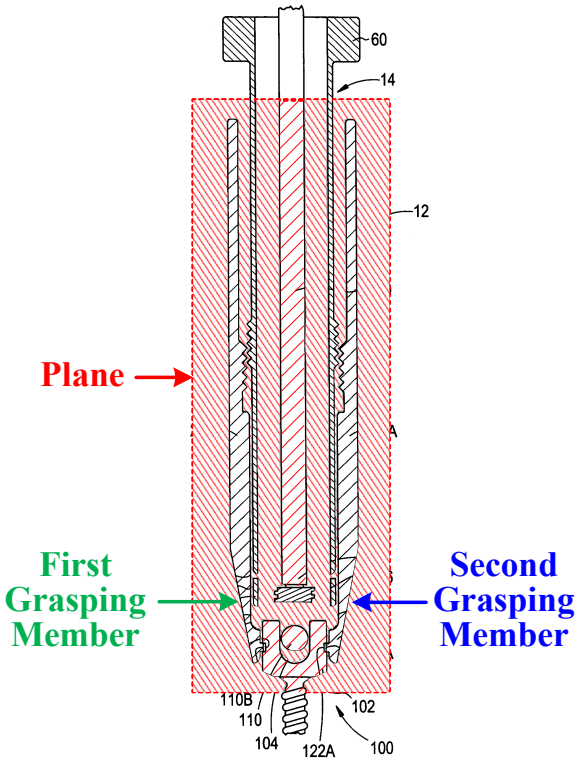

Varieur discloses the claimed "first and second grasping members defining a plane" as recited in claim 16. In particular, the distal ends 22A and 22B (*i.e.,* the claimed *first and second grasping members*) of the first and second jaw members 18A and 18B of Varieur define a plane as demonstrated above in annotated FIGS. 4 and 16A. *See also* ORT-1107 ¶ 156.

e. [16-4]: "a rotatable member extending through the housing along the longitudinal axis"

FIG. 16A

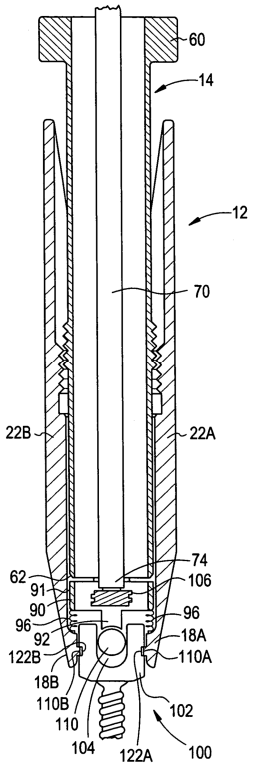

Varieur discloses the claimed "rotatable member extending through the housing along the longitudinal axis" as recited in claim 16. For example, Varieur discloses "***[a] rod adjusting tool 14*** [the claimed *rotatable member*] . . . connectable to . . . the bone anchor engaging tool 12." *Id.* ¶ 43 (emphasis added); FIG. 16A, above. Varieur further discloses that "the rod adjusting tool 14 [the claimed *rotatable member*] is adjustable ***along the longitudinal axis [28]*** of the bone anchor engaging tool 12." *Id.* (emphasis added) Additionally, Varieur discloses "[t]he rod adjusting tool 14 [the claimed *rotatable member*] ***may be advanced axially*** [the claimed *extending*]***, by rotating*** the proximal end 60 of the

rod adjusting tool 14" through the annular collar 40/first and second jaw members 18A and 18B (the claimed *housing*) as shown in FIGS. 4, 16A. *Id.* ¶ 49 (emphasis added).

f. [16-5]: "a rod contact member positioned at a distal end of the rotatable member"

FIG. 16A

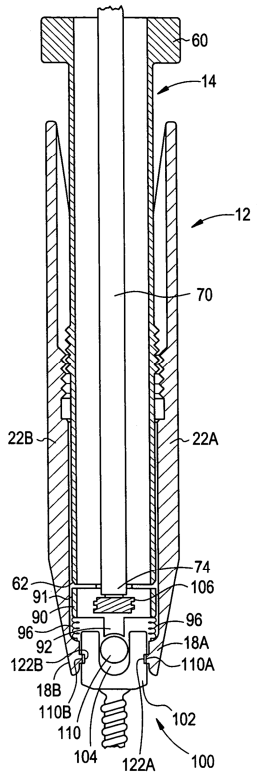

FIG. 16B

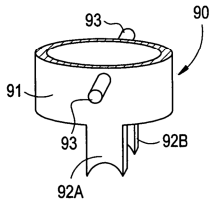

Varieur discloses the claimed "rod contact member positioned at a distal end of the rotatable member" as recited in claim 16. For example, Varieur discloses "***a rod engaging member 90*** [the claimed *rod contact member*] . . . positioned distal to the distal end 62 of the rod adjustment tool [the claimed *rotatable member*]." *Id.* ¶ 46 (emphasis added); FIGS. 16A, 16B, above. Varieur further discloses that

"[t]he distal end of the extensions 94 [of the rod engaging member 90] can engage the spinal rod 110." *Id.*

g. [16-6]: "the rod contact member translatable along the longitudinal axis in response to rotation of the rotatable member about the longitudinal axis"

FIG. 16A

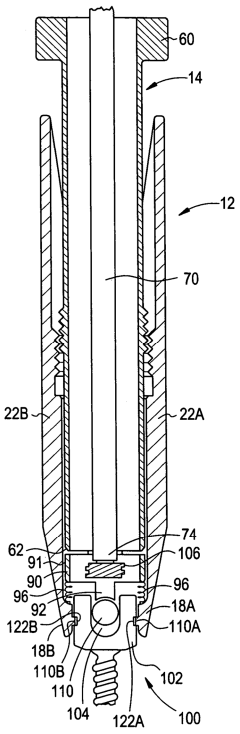

FIG. 16B

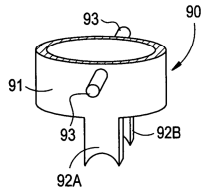

Varieur discloses the claimed "rod contact member translatable along the longitudinal axis in response to rotation of the rotatable member about the longitudinal axis" as recited in claim 16. In particular, Varieur discloses that "[t]he distal end of the extensions 94 [of the rod engaging member 90] can engage the spinal rod 110 ***during axially advancement of the rod engaging member 90*** [the claimed *rod contact member*] by the rod adjusting tool 14 [the claimed *rotatable member*]." *Id.* ¶ 46 (emphasis added); FIGS. 16A, 16B, above. As discussed

above, Varieur discloses that, in response to ***rotation of*** the proximal end 60 of the rod adjusting tool 14, the rod adjusting tool 14 is adjustable (*e.g.*, axially advanceable) ***along the longitudinal axis 28*** of the bone anchor engaging tool 12. *See id.* ¶¶ 43, 49. Therefore, rotation of the rod adjusting tool 14 (the claimed *rotatable member*) causes advancement of both the rod adjusting tool 14 and the rod engaging member 90 (the claimed *rod contact member*) along the longitudinal axis 28 of the bone anchor engaging tool 12.

h. [16-7]: "wherein the rod contact member and the rotatable member are translatable within the plane defined by the first and second grasping members"

Varieur discloses the claimed "rod contact member and the rotatable member are translatable within the plane defined by the first and second grasping members" as recited in claim 16. As discussed, Varieur discloses that "the rod adjusting tool 14 [the claimed *rotatable member*] is adjustable ***along the longitudinal axis [28]*** of the bone anchor engaging tool 12." *Id.* ¶ 43 (emphasis added). Varieur also discloses that "[t]he distal end of the extensions 94 [of the rod engaging member 90] can engage the spinal rod 110 ***during axially advancement of the rod engaging member 90*** [the claimed *rod contact member*] by the ***rod adjusting tool 14*** [the claimed *rotatable member*]." Id. ¶ 46 (emphasis added).

FIG. 16A

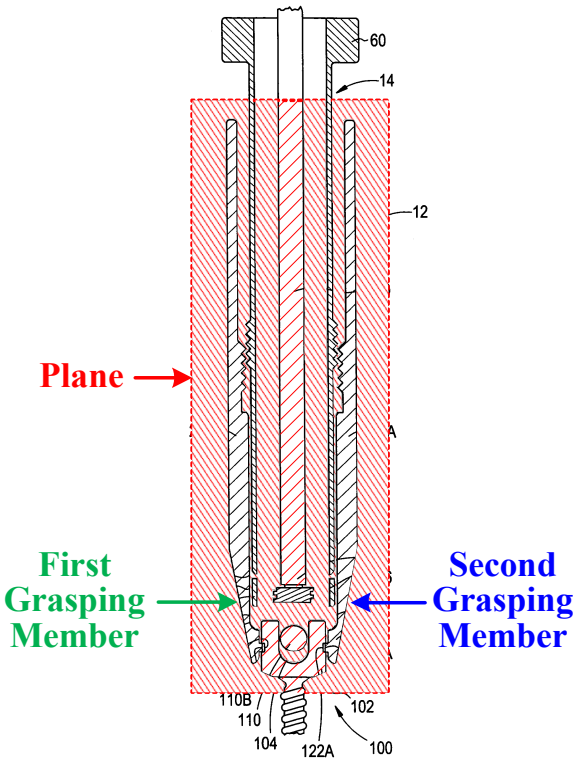

Moreover, as shown in annotated FIG. 16A above, the rod adjusting tool 14 (*i.e.,* the claimed *rotatable member*) and the rod engaging member 90 (*i.e.*, the claimed *rod contact member*) are translatable within the plane defined by the distal ends 22A, 22B of the first and second jaw members 18A, 18B (*i.e.,* the claimed *first and second grasping members*).

2. Claim 18: "The rod reducing device of claim 16, wherein respective distal ends of the first and second grasping members include at least one grasping feature engageable with a portion of a bone anchor"

Varieur discloses the claimed "wherein respective distal ends of the first and second grasping members include at least one grasping feature engageable with a portion of a bone anchor" as recited in claim 18. For example, Varieur discloses

"each distal end 22A,B [of the first and second jaw members 18A, 18B] includes ***a cylindrical pin 54A,B*** [the claimed *at least one grasping feature*] extending from an interior surface thereof." *Id.* ¶ 39 (emphasis added); FIG. 4, below. Varieur states that "[t]he cylindrical pins 54A,B [the claimed *at least one grasping feature*] may be ***sized to engage swage holes*** provided in exterior surface of the rod receiving portion ***of a pedicle screw*** [a *bone anchor*]." *Id.* (emphasis added).

FIG. 4

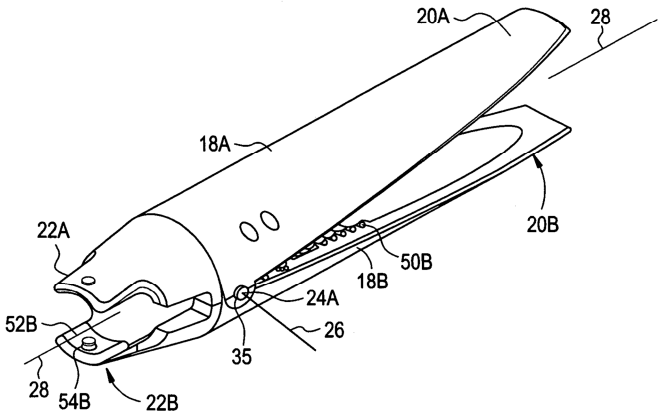

3. Claim 19: "The rod reducing device of claim 16, wherein distal movement of the rod contact member urges a rod towards distal ends of the first and second grasping members"

Varieur discloses the claimed "wherein distal movement of the rod contact member urges a rod towards distal ends of the first and second grasping members" as recited in claim 19. For example, as discussed, Varieur teaches that rotation of the rod adjusting tool 14 (the claimed *rotatable member*) causes distal advancement of both the rod adjusting tool 14 and the rod engaging member 90

(the claimed *rod contact member*) along the longitudinal axis 28 of the bone anchor engaging tool 12. *See, e.g., id.* ¶¶ 43, 47, 49; FIG. 16A, below. Such distal advancement also causes the spinal rod to advance distally relative to the bone anchor. *See, e.g., id.* ¶ 43.

FIG. 16A

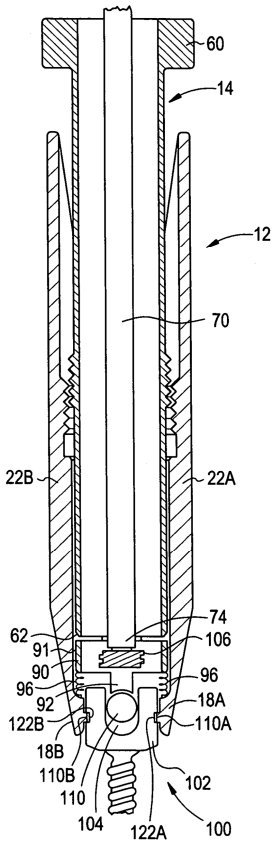

4. Claim 21: "The rod reducing member of claim 16, wherein a portion of the rod contact member is positioned between the first and second grasping members"

Varieur discloses the claimed "wherein a portion of the rod contact member is positioned between the first and second grasping members" as recited in claim 21. More specifically, Varieur discloses that "[t]he rod engaging member 90 [the

claimed *rod contact member*], in the exemplary embodiment, includes an annular ring 91." *Id.* ¶ 46; FIGS. 16A, 16B, below. According to Varieur, "one or [more] guide pins 93 may be provided on the annular ring 91 [of the rod engaging member 90] ***that may seat within one or more axially oriented grooves provided on the interior surface of the jaw members 18A,B.***" *Id.* ¶ 47 (emphasis added).

FIG. 16A

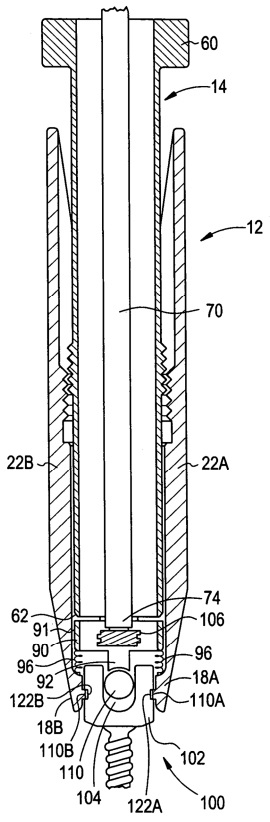

FIG. 16B

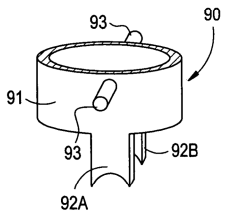

Moreover, as shown above in FIG. 16A, the rod engaging member 90 (*i.e.,* the claimed *rod contact member*) is positioned between the distal ends 22A and 22B of the first and second jaw members 18A and 18B (*i.e.,* the claimed *first and second grasping members*).

F. Ground 6: Claim 22 Is Rendered Obvious by Varieur (ORT-1104) in View of Runco (ORT-1103)

Claim 22 of the '816 Patent is rendered obvious by Varieur in view of Runco. Dependent claim 22 recites, in part, "wherein the rod contact member is ***attached*** to the distal end of the rotatable member." (Emphasis added). As discussed above in Section VIII(C)(1), Varieur discloses that "[the] rod engaging member 90 [the claimed *rod contact member*] ***is positioned distal*** to the distal end 62 of the rod adjustment tool [the claimed *rotatable member*]." ORT-1104 ¶ 46 (emphasis added); FIG. 16A, below.

FIG. 16A

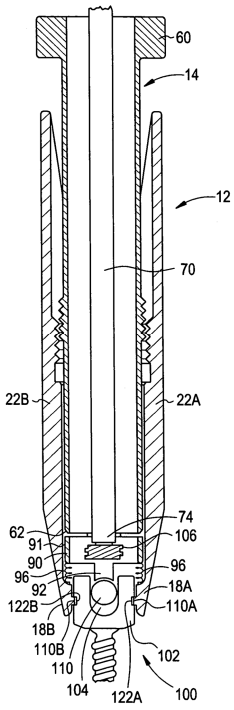

Varieur further discloses that "[a] biasing mechanism may be provided to bias the rod engaging member 90 [the claimed *rod contact member*] axially in the

proximal direction." *Id.* ¶ 47. That is, the biasing mechanism of Varieur may bias the rod engaging member 90 (*i.e.*, the claimed *rod contact member*) toward the rod adjusting tool 14 (*i.e.*, the claimed *rotatable member*) thereby keeping the rod engaging member 90 proximate to the rod adjusting tool 14 during advancement.

Varieur, however, does not explicitly disclose that the rod engaging member 90 (*i.e.*, the claimed *rod contact member*) is ***attached*** to the distal end 62 of the rod adjusting tool 14 (*i.e.*, the claimed *rotatable member*). As discussed below, Runco discloses a rod contact member attached to the distal end of a rotatable member.

Runco was filed on September 26, 2005, and published on April 13, 2006, more than one year prior to the '816 Patent's earliest filing date of July 13, 2007. ORT-1103 at 1. Therefore, Runco is prior art under at least 35 U.S.C. § 102(b). Runco was never cited nor considered by the Examiner during prosecution of the '816 Patent. ORT-1101 at 1-2.

Similar to Varieur, Runco discloses rod reduction instruments configured to position a spinal rod within a rod-receiving portion of a bone anchor. *See, e.g.,* ORT-1103 ¶¶ 5-7. For example, Runco discloses "an instrument 400 for engaging an implant, such as a bone anchor, and positioning a fixation element, such as a spinal rod, relative to the bone anchor." *Id.* ¶ 100. Runco discloses that the instrument 400 includes a rod adjusting tool 414. *Id.* ¶ 104. The rod adjusting tool 414 includes "***a distal component 419*** [the claimed *rod contact member*] ***having a***

rod engaging surface 421 and a proximal component 423 [the claimed *rotatable member*] ***connectable to . . . the distal component 419***." *Id.* (emphasis added); FIG. 27C, below.

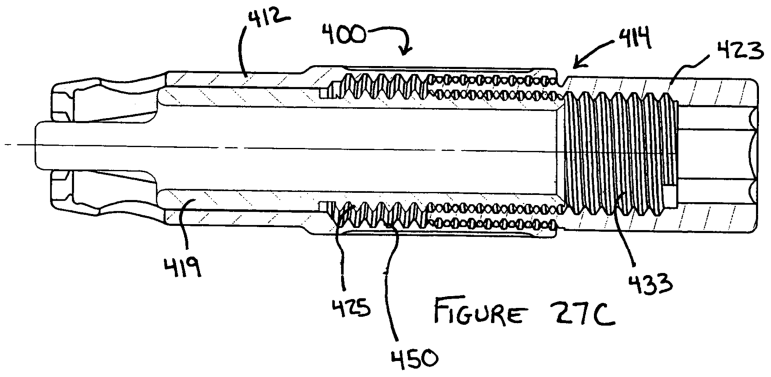

FIGURE 27C

It would have been obvious to a person of ordinary skill in the art to ***attach*** the rod engaging member 90 (*i.e.*, the claimed *rod contact member*) of Varieur to the distal end 62 of the rod adjusting tool 14 (*i.e.*, the claimed *rotatable member*), as taught by Runco. Such an arrangement would enable the rod engaging member 90 (*i.e.*, the claimed *rod contact member*) of Varieur to remain proximate to the distal end 62 of the rod adjusting tool 14 (*i.e.*, the claimed *rotatable member*) during axial advancement and retraction of the rod adjusting tool 14 and the rod engaging member 90. *See, e.g.,* ORT-1104 ¶ 47; *see also* ORT-1107 ¶¶ 174-175.

G. Ground 7: Claims 16, 18, 19, 21, and 22 are Anticipated by Jackson (ORT-1105)

Jackson also anticipates claims 16, 18, 19, 21, and 22 of the '816 Patent. Jackson was filed on February 27, 2004, and published on September 1, 2005, more than one year prior to the '816 Patent's earliest filing date of July 13, 2007.

ORT-1105 at 1. Therefore, Jackson is prior art under at least 35 U.S.C. § 102(b). Jackson was never cited nor considered by the Examiner during prosecution of the '816 Patent. ORT-1101 at 1-2.

Jackson discloses surgical tool sets and methods for installing a spinal rod into one or more bone screws. *See, e.g.,* ORT-1105 ¶¶ 1, 35. To that end, Jackson discloses a closure installation tool 145 configured to bias (*e.g.*, reduce or approximate) a spinal rod into the head of bone screw. *See, e.g., id.* ¶ 63.

1. Claim 16:

a. [16-PRE]: "A rod reducing device comprising"

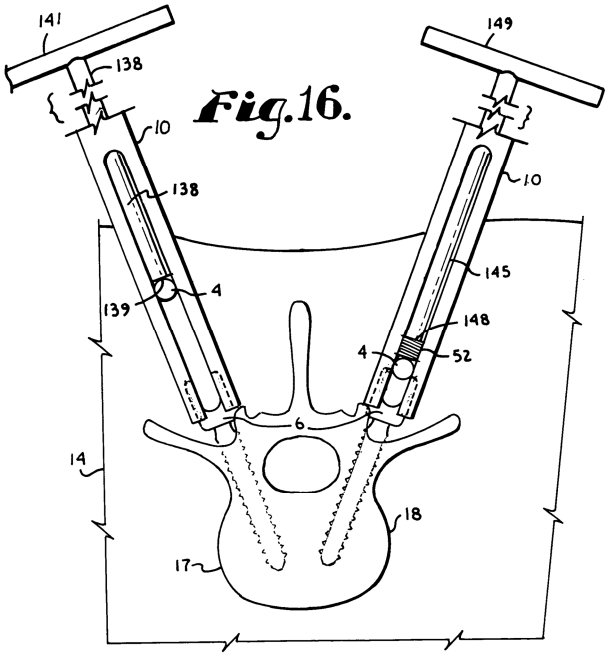

Fig.16.

Jackson discloses the claimed "rod reducing device." For example, Jackson discloses "[n]ear the bottom of ***the guide tools 9 and 10***, . . . ***the [closure installation] tool 145*** and closure top 52 are rotated . . . so as to drive the closure

top 52 downward against the rod 4 and ***to urge the rod 4 downward into the bone screw channel 67***." *Id.* ¶ 63 (emphasis added); FIG. 16, above.

b. [16-1]: "a housing defining a longitudinal axis"

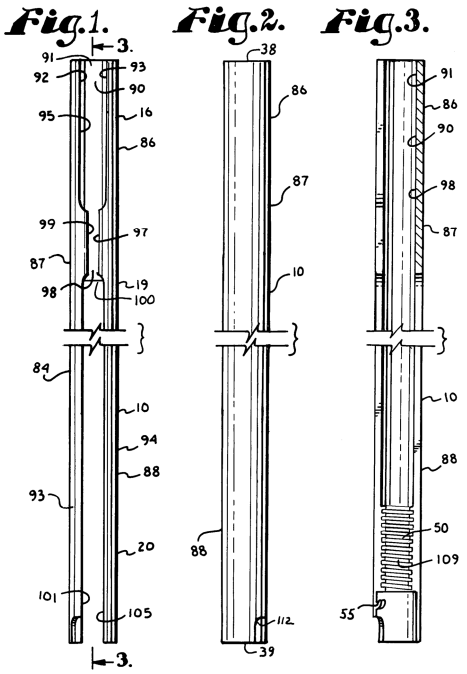

Jackson discloses the claimed "housing defining a longitudinal axis" as recited in claim 16. For example, Jackson discloses "[e]ach intermediate guide tool 10 has an ***overall elongate body 84*** [the claimed *housing*] with an upper portion 86, an intermediate portion 87 and a lower portion 88." *Id.* ¶ 46 (emphasis added); FIGS. 1-3, above. Jackson also discloses that the elongate body 84 (*i.e.,* the claimed *housing*) includes a channel 90 having "a front opening 95 that extends parallel to ***an axis of the body 84*** and that is sized and shaped to receive tools and elements described below." *Id.* ¶ 46 (emphasis added).

c. [16-2]: "the housing including first and second grasping members configured to grasp a portion of a bone anchor therebetween"

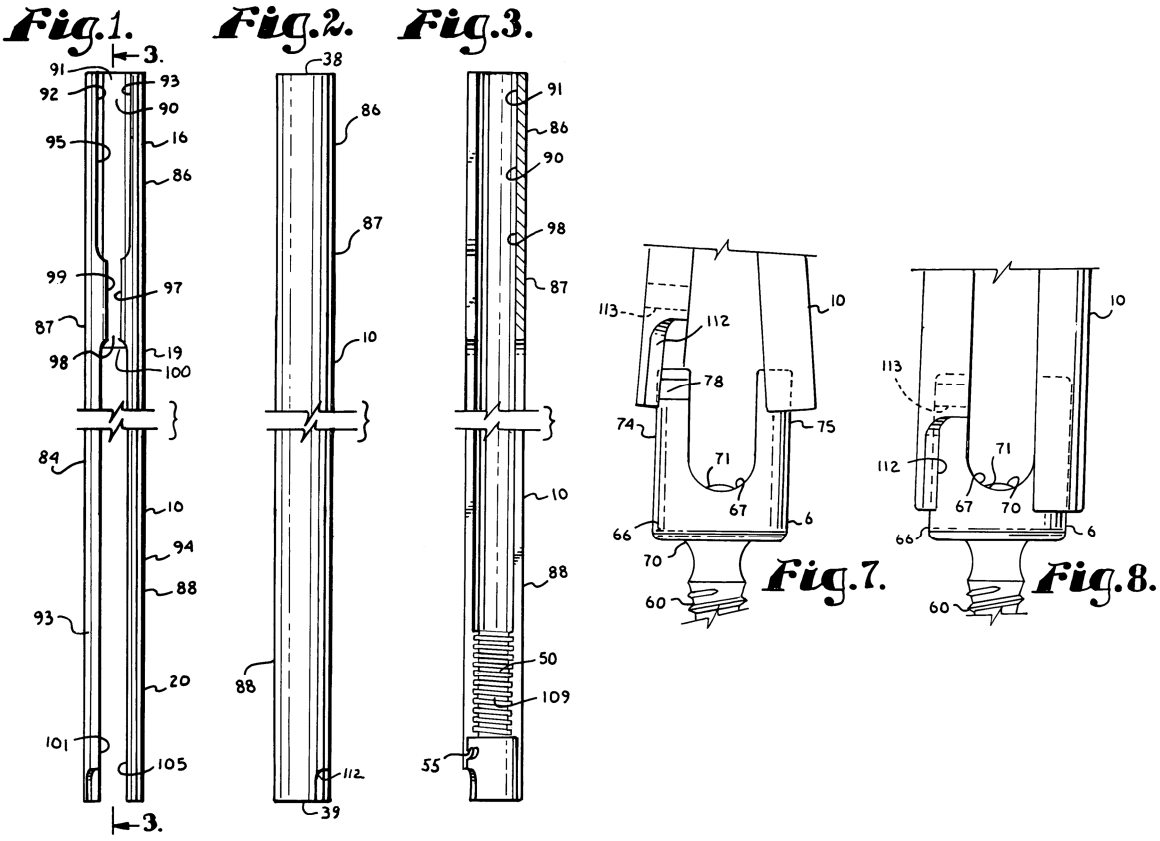

Jackson discloses the claimed "housing including first and second grasping members configured to grasp a portion of a bone anchor therebetween" as recited in claim 16. In particular, Jackson discloses "[t]he lower portion 88 [of the intermediate guide tool 10] includes ***two spaced side walls or legs 93 and 94*** [the claimed *first and second grasping members*] with an elongate and axially extending passthrough opening 101 between the legs 93 and 94 that extends more than half way along the intermediate tool 10 and near the intermediate portion 87." *Id.* ¶ 47 (emphasis added); FIGS. 1-3, above.

Jackson further discloses that "the lower end of the guide tool 10 is splayed or expanded outwardly **by forcing the bone screw head 66 between the legs 93 and 94** [the claimed *first and second grasping members*] . . . until the attachment structure 113 [of the leg 93] aligns with the [bone screw] receiver 78 and the former snaps into the later." *Id.* ¶ 58 (emphasis added); FIGS. 7-8, above.

d. [16-3]: "the first and second grasping members defining a plane"

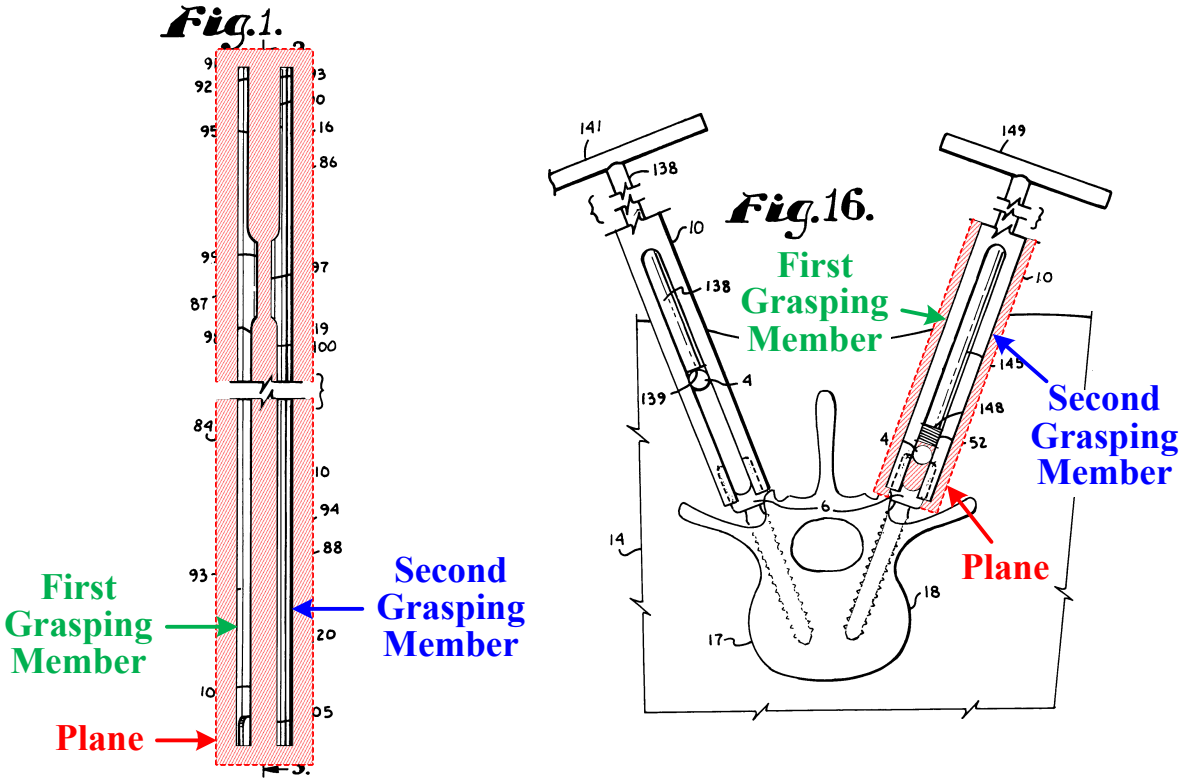

Jackson discloses the claimed "first and second grasping members defining a plane." As illustrated in annotated FIGS. 1 and 16 above, the legs 93 and 94 (*i.e.*, the claimed *first and second grasping members*) of Jackson implicitly define a plane. *See also* ORT-1107 ¶¶ 184-185.

e. [16-4]: "a rotatable member extending through the housing along the longitudinal axis; and"

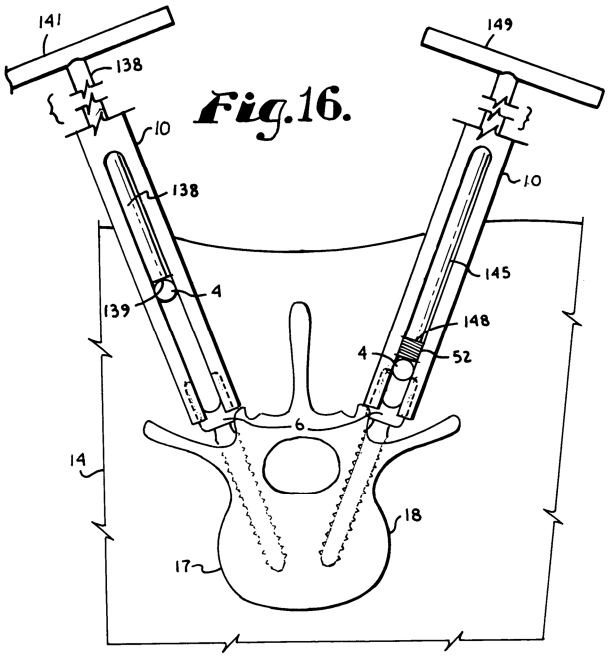

Fig.16.

Jackson discloses the claimed "rotatable member extending through the housing along the longitudinal axis" as recited in claim 16. For example, Jackson discloses "***[t]he tool 145*** [the claimed *rotatable member*] ***has an elongate rod or shaft 147 adapted to be received in and pass axially through*** any of the channels of the guides 9 and 10 and a handle 149." *Id.* ¶ 54 (emphasis added); FIG. 16, above. Jackson also discloses that "***the tool 145*** [the claimed *rotatable member*] and closure top 52 ***are rotated*** [to] mate the closure top helical mating structure 125 with the first guide and advancement structure 50." *Id.* ¶ 63 (emphasis added). Jackson further discloses "***continued rotation of the tool 145*** [the claimed *rotatable member*] drives the rod 4 downward and into engagement with the dome 71 of the bone screw shank 60." *Id.* (emphasis added).

f. [16-5]: "a rod contact member positioned at a distal end of the rotatable member"

*Fig.*17.

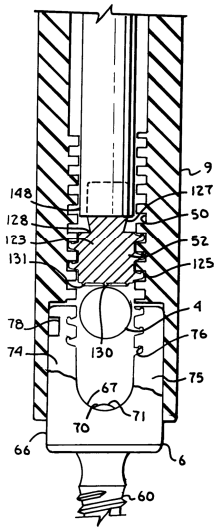

Jackson discloses the claimed "rod contact member positioned at a distal end of the rotatable member" as recited in claim 16. For example, Jackson discloses "the tool 145 [the claimed *rotatable member*] and ***closure top 52*** [the claimed *rod contact member*] are rotated . . . ***so as to drive the closure top 52 downward against the rod 4*** and to urge the rod 4 downward into the bone screw channel 67." *Id.* ¶ 63 (emphasis added); FIG. 17, above.

Jackson further discloses that the closure top 52 (*i.e.*, the claimed *rod contact member*) is placed at a distal end of the closure installation tool 145 (*i.e.*, the claimed *rotatable member*). For example, Jackson discloses that "[t]he lower end of the rod 147 [of the closure installation tool 145] ***terminates in a socket 148*** that is ***adapted to receive the closure break off head 127 [of the closure top 52]***. *Id.* ¶ 54 (emphasis added); FIG. 17, above.

g. [16-6]: "the rod contact member translatable along the longitudinal axis in response to rotation of the rotatable member about the longitudinal axis"

Fig.17.

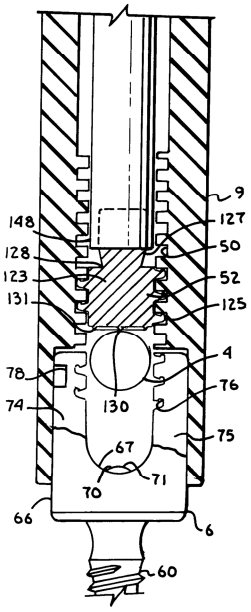

Fig.18.

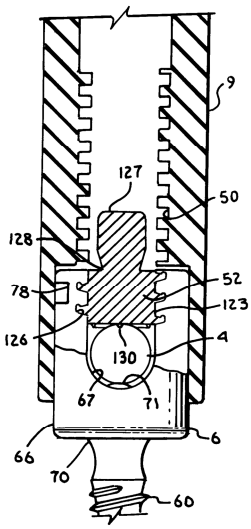

Jackson discloses the claimed "rod contact member translatable along the longitudinal axis in response to rotation of the rotatable member about the longitudinal axis" as recited in claim 16. In particular, as discussed above, Jackson discloses that "the tool 145 [the claimed *rotatable member*] and ***closure top 52*** [the claimed *rod contact member*] are rotated . . . ***so as to drive the closure top 52 downward against the rod 4*** and to urge the rod 4 ***downward*** into the bone screw channel 67." *Id.* (emphasis added); FIGS. 17-18, above. Such ***downward advancement*** of the tool 145 (*i.e.*, the claimed *rotatable member*) and the closure top 52 (*i.e.*, the claimed *rod contact member*) would be along the longitudinal axis of the body 84.

h. [16-7]: "wherein the rod contact member and the rotatable member are translatable within the plane defined by the first and second grasping members"

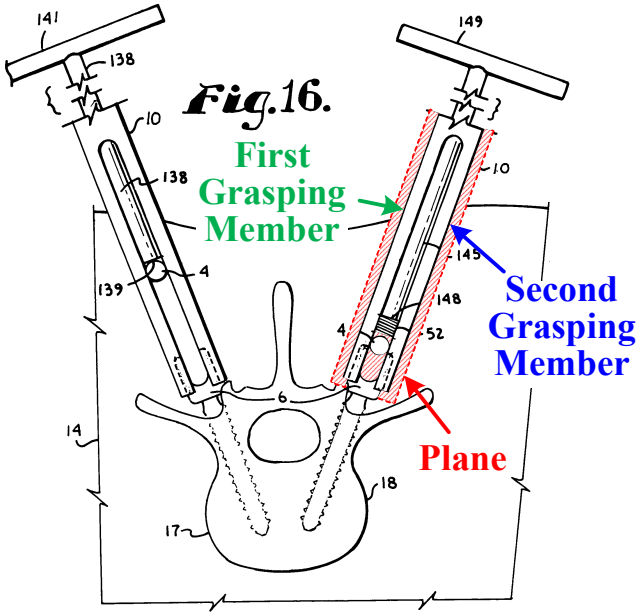

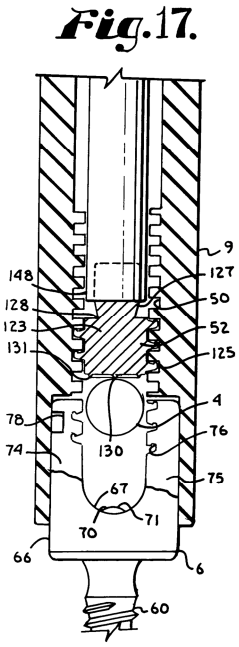

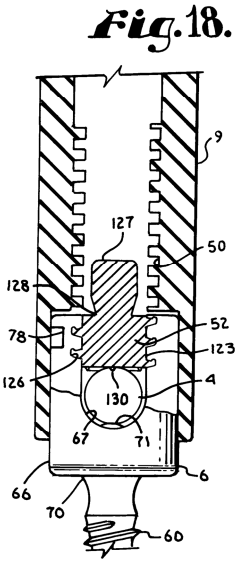

Jackson discloses the claimed "rod contact member and the rotatable member are translatable within the plane defined by the first and second grasping members" as recited in claim 16. For example, as discussed above, Jackson discloses "***[t]he tool 145*** [the claimed *rotatable member*] ***has an elongate rod or shaft 147 adapted to be received in and pass axially through*** any of the channels of the guides 9 and 10 and a handle 149." *Id.* ¶ 54 (emphasis added). Jackson also discloses that "***the tool 145*** [the claimed *rotatable member*] ***and closure top 52*** [the claimed *rod contact member*] are rotated . . . ***so as to drive the closure top 52 downward against the rod 4*** and to urge the rod 4 ***downward*** into the bone screw

channel 67. *Id.* ¶ 63 (emphasis added); FIGS. 16 (annotated) and FIGS 17-18, above.

Furthermore, as illustrated above in annotated FIG. 16, Jackson discloses that the closure installation tool 145 (*i.e.*, the claimed *rotatable member*) and the closure top 52 (*i.e.*, the claimed *rod contact member*) are translatable within the plane defined by the legs 93 and 94 (*i.e.*, the claimed *first and second grasping members*).

2. Claim 18: "The rod reducing device of claim 16, wherein respective distal ends of the first and second grasping members include at least one grasping feature engageable with a portion of a bone anchor"

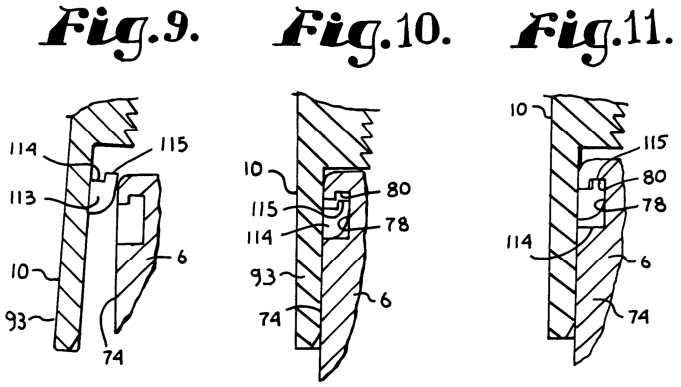

Jackson discloses the claimed "wherein respective distal ends of the first and second grasping members include at least one grasping feature engageable with a portion of a bone anchor" as recited in claim 18. For example, Jackson discloses "[t]he lower end of each intermediate guide tool 10 also includes a cutout 112 and ***an attachment structure 113*** [the claimed *at least one grasping feature*]," which is engageable with a "bone screw head receiver 78." *Id.* ¶¶ 49-50 (emphasis added).

Jackson further discloses that "***[t]he attachment structure 113*** (see especially FIGS. 9 to 11) includes a body 114 with ***an upperwardly extending, projection, flange or hook member 115*** that follows the inner curvature of the guide tool ***leg 93*** [the claimed *first grasping member*]." *Id.* (emphasis added); FIGS. 9-11, above.

3. Claim 19: "The rod reducing device of claim 16, wherein distal movement of the rod contact member urges a rod towards distal ends of the first and second grasping members"

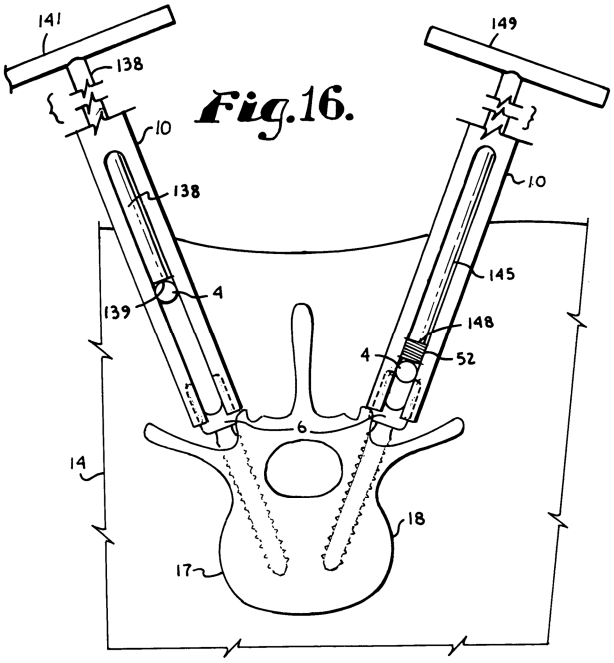

Fig.16.

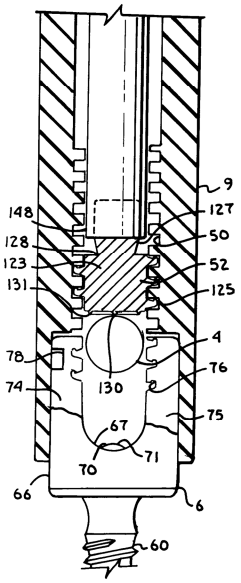

Fig.17.

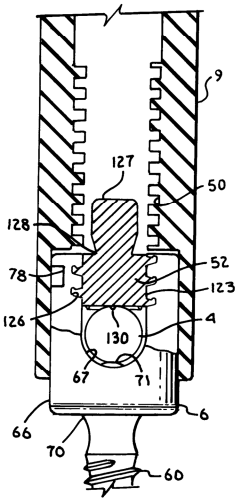

Fig.18.

Jackson discloses the claimed "wherein distal movement of the rod contact member urges a rod towards distal ends of the first and second grasping members" as recited in claim 19. More specifically, as discussed above, Jackson discloses that "***the tool 145*** [the claimed *rotatable member*] ***and closure top 52*** [the claimed *rod contact member*] are rotated . . . ***so as to drive the closure top 52 downward***

against the rod 4 and to urge the rod 4 ***downward*** into the bone screw channel 67." *Id.* ¶ 63 (emphasis added); FIGS. 16-18, above.

4. Claim 21: "The rod reducing member of claim 16, wherein a portion of the rod contact member is positioned between the first and second grasping members"

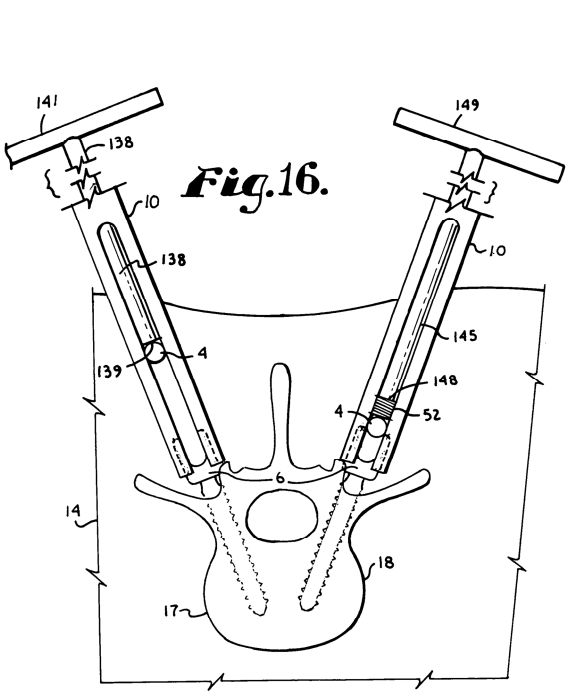

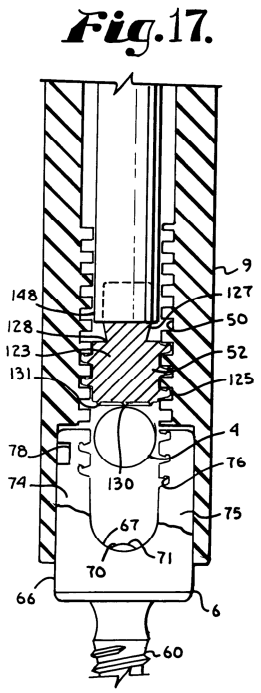

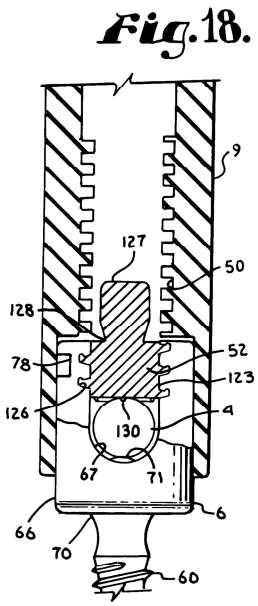

Jackson discloses the claimed "wherein a portion of the rod contact member is positioned between the first and second grasping members" as recited in claim 21. More specifically, Jackson discloses that "***[e]nclosure 52*** [the claimed *rod contact member*] closes ***between the spaced bone screw arms 74 and 75*** [the claimed *first and second grasping members*] to secure the rod 4 in the channel 67." *Id.* ¶ 51 (emphasis added); FIGS. 16-18, above. Jackson further discloses that "the lower end of the guide tool 10 is splayed or expanded outwardly ***by forcing the***

bone screw head 66 between the legs 93 and 94 [the claimed *first and second grasping members*] . . . until the attachment structure 113 [of the leg 93] aligns with the [bone screw] receiver 78 and the former snaps into the later." *Id.* ¶ 58 (emphasis added); FIGS. 7-8, above. Thus, Jackson discloses the enclosure 52 (*i.e.*, the portion of the rod contact member) positioned between the first and second legs 93 and 94 (the first and second grasping members).

5. Claim 22: "The rod reducing member of claim 16, wherein the rod contact member is attached to the distal end of the rotatable member"

Jackson discloses the claimed "wherein the rod contact member is ***attached*** to the distal end of the rotatable member" as recited in claim 22. More specifically, Jackson discloses "***the tool 145*** [the claimed *rotatable member*] has a socket 148 ***that grips*** the break off head 127 ***of the closure top 52*** [the claimed *rod contact member*]." *Id.* ¶ 63 (emphasis added).

H. Ground 8: Claim 18 Is Rendered Obvious by Jackson (ORT-1105) in View of Trudeau (ORT-1106)

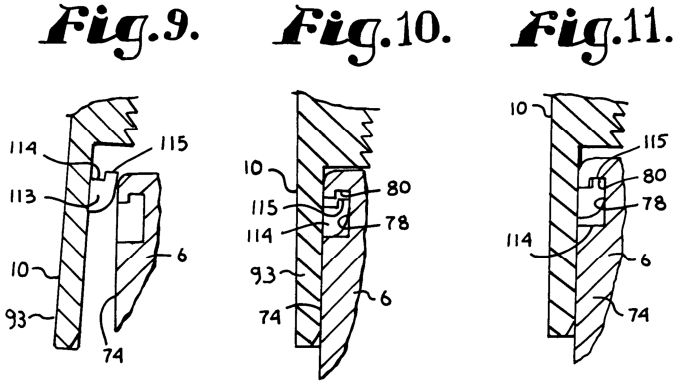

Dependent claim 18 recites, in part, "wherein respective distal ends of the first and second grasping members include at least one grasping feature engageable with a portion of a bone anchor." Claim 18 of the '816 Patent is rendered obvious by Jackson in view of Trudeau.

As discussed above in Section VIII(F)(2), "***[t]he attachment structure 113*** (see especially FIGS. 9 to 11) [of the leg 93] includes a body 114 with ***an upperwardly extending, projection, flange or hook member 115*** that follows the inner curvature of the guide tool ***leg 93*** [the claimed *first grasping member*]." ORT-1105 ¶ 49 (emphasis added); FIGS. 9-11, above.

Petitioner notes that under the broadest reasonable interpretation, nothing in claim 18, or in any of the other Challenged Claims, requires that ***each*** of the first and second grasping members include at least one grasping feature. Therefore, the attachment structure 113 of Jackson is the claimed "at least one grasping feature engageable with a portion of a bone anchor" as recited in claim 18.

Should the Board, however, conclude that claim 18 requires that ***both*** the claimed first grasping member ***and*** the claimed second grasping member ***each*** include at least one grasping feature, such feature is disclosed by Trudeau.

Fig. 4b

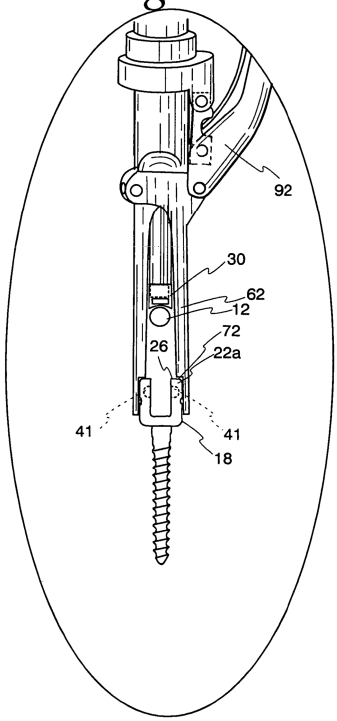

Trudeau discloses "a rod persuader device 10 for advancing a spinal rod 12 towards a fixation device 14 in the form of a pedicle screw fixture 16." ORT-1103 ¶ 34. Trudeau further discloses that the rod persuader device 10 (*e.g.,* a rod reduction device) includes "***a pair of opposed jaws 60 and 62***" (*e.g.*, first and second grasping members) that "may open and close relative to each other ***for attaching or releasing from the pedicle screw fixture 16***" (*e.g.*, a bone anchor). *Id.* ¶ 48 (emphasis added); FIG. 4b, above. Trudeau also discloses that ***each jaw 60, 62*** includes a tooth 38 configured to be received by a corresponding recess of the pedicle screw 16 (*e.g.*, the bone anchor). *See, e.g., id*. Trudeau explains that "[t]he configuration of the paired recesses 36 and teeth 38 ***provides balanced***

transmission of the force from the tool 10 directing the spinal rod 12 into the yoke 18 ***through the mating recesses 36 and teeth 38***." *Id.* ¶ 47 (emphasis added).

It would have been obvious to a person of ordinary skill in the art to modify the legs 93 and 94 (*i.e.*, the claimed *first and second grasping members*) of Jackson to each include an attachment structure 113 (*i.e.,* the claimed *at least one grasping feature*) as taught by Trudeau because such an arrangement would provide balanced transmission of the force from the rod reduction device when linearly advancing a rod towards a bone anchor. *See* ORT-1107 ¶¶ 205-206.

IX. CONCLUSION

As detailed above, each of claims 16, 18, 19, 21, and 22 of the '816 Patent is anticipated and rendered obvious by at least one or more prior art references. Petitioner has therefore established that there is a reasonable likelihood that one or more of the claims of the patent are unpatentable. Accordingly, Petitioner requests review of these claims.

Dated: January 22, 2018

Respectfully submitted,

/Paul M. Ulrich/

Paul M. Ulrich
Reg. No. 46,606
ULMER & BERNE LLP
600 Vine Street, Suite 2800
Cincinnati, OH 45202
Telephone: 513.698.5156
Facsimile: 513.698.5157

Attorney for Petitioner

CERTIFICATE OF COMPLIANCE

In accordance with 37 C.F.R. § 42.24(d), Petitioner certifies that the word count for this petition totals 13,692 words, which is less than 14,000 allowed under 37 C.F.R. § 42.24(a)(i).

/Paul M. Ulrich/
Paul M. Ulrich

CERTIFICATE OF SERVICE

Pursuant to 37 C.F.R. §§ 42.6(e)(4)(i) *et seq.* and 42.105(b), the undersigned certifies that on January 22, 2018, a complete and entire copy of this petition for *inter partes* review and all supporting exhibits were provided by Federal Express, cost prepaid, to the Patent Owner by serving the correspondence address of record as follows:

Carter DeLuca Farrell & Schmidt LLP
445 Broad Hollow Road, Suite 420
Melville, NY 11747

/Paul M. Ulrich/
Paul M. Ulrich
ULMER & BERNE LLP
600 Vine Street, Suite 2800
Cincinnati, OH 45202
Telephone: 513.698.5156
Facsimile: 513.698.5157