Trials@uspto.gov
571-272-7822

Paper 24
Date: May 22, 2020

UNITED STATES PATENT AND TRADEMARK OFFICE

BEFORE THE PATENT TRIAL AND APPEAL BOARD

MEDACTA USA, INC., PRECISION SPINE, INC.,
and LIFE SPINE, INC.,
Petitioner,

v.

RSB SPINE, LLC,
Patent Owner.

IPR2020-00265
Patent 6,984,234 B2

Before PATRICK R. SCANLON, MICHAEL L. WOODS, and
ERIC C. JESCHKE, *Administrative Patent Judges*.

JESCHKE, *Administrative Patent Judge*.

DECISION
Granting Institution of *Inter Partes* Review
35 U.S.C. § 314

I. BACKGROUND

Medacta USA, Inc., Precision Spine, Inc., and Life Spine, Inc. (collectively, "Petitioner") filed a Petition to institute an *inter partes* review of claims 35, 37, and 39 (the "challenged claims") of U.S. Patent No. 6,984,234 B2 (Ex. 1001, "the '234 patent"). Paper 2 ("Pet."). RSB Spine, LLC ("Patent Owner") filed a Patent Owner's Preliminary Response. Paper 14 ("Prelim. Resp.").

We have authority to determine whether to institute an *inter partes* review. *See* 35 U.S.C. § 314 (2018); 37 C.F.R. § 42.4(a) (2019). Section 314(a) of Title 35 of the United States Code provides that an *inter partes* review may not be instituted "unless . . . the information presented in the petition . . . shows that there is a reasonable likelihood that the petitioner would prevail with respect to at least 1 of the claims challenged in the petition." Upon consideration of the evidence and arguments in the Petition (including its supporting testimonial evidence) as well as the evidence and arguments in the Preliminary Response, for the reasons below, we determine that the Petition shows a reasonable likelihood that Petitioner would prevail with respect to at least one of the challenged claims. We thus institute *inter partes* review on all challenged claims on all asserted grounds. *See SAS Inst., Inc. v. Iancu*, 138 S. Ct. 1348, 1354, 1359–60 (2018); *see also PGS Geophysical AS v. Iancu*, 891 F.3d 1354, 1360 (Fed. Cir. 2018) (interpreting the statute to require "a simple yes-or-no institution choice respecting a petition, embracing all challenges included in the petition"); Patent Trial and Appeal Board Consolidated Trial Practice Guide 64 (Nov. 2019) ("The Board will not institute on fewer than all claims or all challenges in a

petition."), *available at* https://www.uspto.gov/TrialPracticeGuide Consolidated ("TPG").

A. Related Proceedings

The parties identify five pending proceedings in the U.S. District Court for the District of Delaware involving the '234 patent: (1) *RSB Spine, LLC v. Life Spine, Inc.*, No. 18-cv-1972 (D. Del.); (2) *RSB Spine, LLC v. Medacta USA, Inc.*, No. 18-cv-1973 (D. Del.); (3) *RSB Spine, LLC v. Precision Spine, Inc.*, No. 18-cv-1974 (D. Del.); (4) *RSB Spine, LLC v. Xtant Medical Holdings, Inc.*, No. 18-cv-1976 (D. Del.); and (5) *RSB Spine, LLC v. DePuy Synthes, Inc.*, No. 19-cv-1515 (D. Del.) (collectively, the "Delaware Litigations"). Pet. 1–2; Paper 5, at 2 (Patent Owner's Mandatory Notices).[1] The Delaware Litigations also involve U.S. Patent No. 9,713,537 B2 (Ex. 1002, "the '537 patent"). Pet. 1.

On the same day as the filing of the Petition in this Proceeding (December 13, 2019), Petitioner filed an additional petition for *inter partes* review of claims 1–10, 13, 14, 16, 18–20, 22, 24, 25, 28, 29, 31 and 32 of the '234 patent in IPR2020-00274. *See Medacta USA, Inc, v. RSB Spine, LLC*, IPR2020-00274, Paper 4 (PTAB Dec. 13, 2019) (Petition) ("-00274 Pet."). Concurrently with the issuance of this Decision, we grant institution in that proceeding. *Medacta USA, Inc, v. RSB Spine, LLC*, IPR2020-00274, Paper 22 (PTAB May 22, 2020) (Decision on Institution).

---

[1] Petitioner also includes *RSB Spine, LLC v. RTI Surgical, Inc.*, No. 18-cv-1975 (D. Del.) in its list of "pending litigations." Pet. 1–2. Patent Owner does not list this litigation (Paper 5 at 2), which appears to have been voluntarily dismissed on April 11, 2019 (*RSB Spine, LLC v. RTI Surgical, Inc.*, No. 18-cv-1975 (D. Del. April 11, 2019), ECF No. 12).

On December 13, 2019, Petitioner also filed petitions for *inter partes* review of claims 1, 3–6, 10, 13–15, 18, 19, 21, 22, 24, 29, and 30 of the '537 patent, in both IPR2020-00264 and IPR2020-00275. *See Medacta USA, Inc, v. RSB Spine, LLC*, IPR2020-00264, Paper 2 (PTAB Dec. 13, 2019) (Petition); *Medacta USA, Inc, v. RSB Spine, LLC*, IPR2020-00275, Paper 4 (PTAB Dec. 13, 2019) (Petition). Concurrently with the issuance of this Decision, we grant institution in IPR2020-00264, but deny institution in IPR2020-00275. *See Medacta USA, Inc, v. RSB Spine, LLC*, IPR2020-00264, Paper 24 (PTAB May 22, 2020) (Decision on Institution); *Medacta USA, Inc, v. RSB Spine, LLC*, IPR2020-00275, Paper 22 (PTAB May 22, 2020) (Decision on Institution).

The parties also identify "related" U.S. Patent Application No. 15/723,522 as currently pending before the U.S. Patent and Trademark Office. Pet. 2; Paper 5, at 2.

B. Real Parties in Interest

The Petition lists the following entities as real parties in interest: Medacta USA, Inc., Precision Spine, Inc., Life Spine, Inc., and Xtant Medical Holdings, Inc. Pet. 1.[2] Patent Owner identifies itself as the sole real party in interest. Paper 5, at 2.

C. The '234 Patent

The '234 patent "is directed to a bone plate system that is particularly useful for assisting with the surgical arthrodesis (fusion) of two bones together, and more particularly, to a bone plate that provides and controls

[2] Petitioner states that "Xtant objects to being identified as a real party-in-interest" and "does not voluntarily agree to be identified as a real party-in-interest." Pet. 1 n.1.

limited movement between the bones during fusion." Ex. 1001, 1:6–10. In the "Background" section, the '234 patent discloses that "[t]he stabilization of the vertebra to allow fusion is often assisted by a surgically implanted device to hold the vertebral bodies in proper alignment and allow the bone to heal, much like placing a cast on a fractured bone." *Id.* at 1:47–51. Figure 1 is reproduced below:

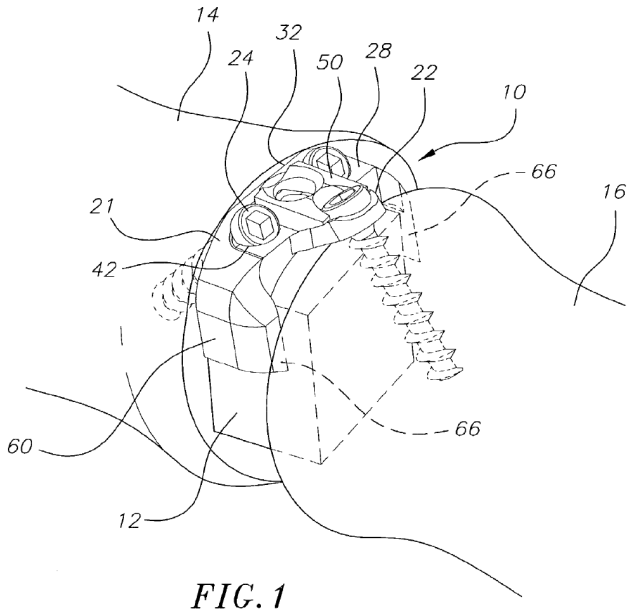

FIG. 1

Figure 1 "is a perspective view of a bone stabilization plate system according to the invention that is assembled between adjacent vertebrae." Ex. 1001, 3:46–48. Specifically, Figure 1 depicts bone stabilization plate system 10, "compris[ing] a base plate 20 [(unnumbered)] having first and second ends, and including a primary member 21 and a secondary member 22 at the second end of the base plate." *Id.* at 4:3–6.[3] Describing Figure 1 (as well as Figure 3 below), the '234 patent discloses that "base plate 20 [is]

[3] Throughout this Decision, we omit any bolding of reference numerals or claim numbers in quotations from the '234 patent and from prior art references.

mounted to first and second adjacent vertebral bodies 14 and 16 with a bone graft 12 between the vertebral bodies" and that "base plate 20 has a bottom surface 26 that contacts the bone graft 12." *Id.* at 4:16–19. Figure 3 is reproduced below:

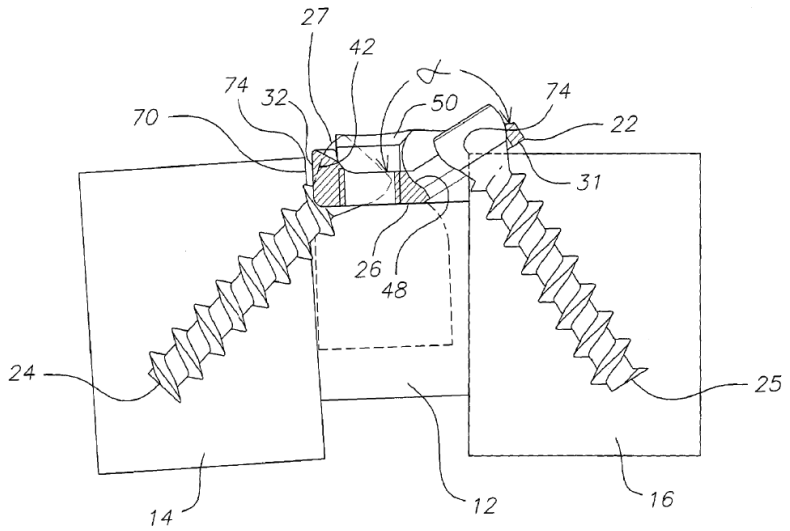

FIG. 3

Figure 3 "is a side cross-sectional view of the bone stabilization plate system of [Figure 1] assembled between adjacent vertebrae." Ex. 1001, 3:51–53. In the embodiment depicted in these Figures, primary member 21 includes two "first bone screw holes 42 extending therethrough for receiving a corresponding number of first bone screws 24," each of which "extends into the first vertebral body 14 at an angle." *Id.* at 4:45–48, 4:55–57. In addition, secondary member 22 includes one "bone screw hole in the form of an elongated bone screw slot 48 for receiving a second bone screw 25," shown extended into "second vertebral body 16." *Id.* at 4:63–67.

In the embodiment depicted above, "base plate 20 further includes a pair of lateral tabs 60 integrally formed with the primary member 21 and extending outwardly from opposite ends of the bottom surface 26 of the

primary member to form, together with the primary member, a unitary substantially U-shaped structure." Ex. 1001, 6:33–38. The '234 patent discloses that, "[i]n use, the lateral tabs 60 extend around the bone graft 12 to prevent lateral shift of the graft and control subsidence of adjacent vertebrae as they set during healing." *Id.* at 6:38–41.

D. Illustrative Claim

Petitioner challenges claims 35, 37, and 39, of which only claim 35 is independent. Claims 37 and 39 each depend directly from claim 35. Claim 35 is reproduced below, reformatted from the version provided in the '234 patent:

> 35. A bone stabilization plate system including
>
> a base plate for retaining bone graft material between first and second longitudinally-aligned, adjacent bone bodies and for permitting force transmission between the first and second bone bodies through the bone graft material, the base plate being sized to have an inter-fit between the first and second adjacent bone bodies and adjacent to lateral extents of the bone graft material such that the first and second bone bodies engage the bone graft material, and
>
> at least first and second bone screws for extending into the first and second bone bodies, respectively, to retain the base plate between the first and second bone bodies,
>
> the base plate having means for interacting with the first and second bone screws, the means for interacting including means for permitting movement of at least one of the first and second bone bodies relative to the base plate.

Ex. 1001, 12:10–25.

E. Asserted Grounds of Unpatentability

Petitioner contends that the challenged claims are unpatentable based on the following asserted grounds:

Claim(s) Challenged	35 U.S.C. §[4]	Reference(s)/Basis
35, 37, 39	103(a)	Michelson[5]
35, 37, 39	103(a)	Fraser '106[6], Michelson

Petitioner supports its challenge with a declaration from Mr. Michael C. Sherman (Ex. 1005, "the Sherman Declaration" or "Sherman Decl.").

II. DISCUSSION

A. Discretion Under 35 U.S.C. § 314(a) Based on Parallel Petitions

Institution of *inter partes* review is discretionary. *See* 35 U.S.C. § 314(a) (authorizing institution of an *inter partes* review under particular

---

[4] The Leahy-Smith America Invents Act ("AIA") included revisions to 35 U.S.C. § 103 that became effective on March 16, 2013. Pub. L. No. 112-29, §§ 3(c), 3(n)(1), 125 Stat. 284, 287, 293 (2011). Because the application from which the '234 patent issued was filed before March 16, 2013, we apply the pre-AIA version of this statute. *See* Pet. 3 (stating same). We would reach the same outcome, however, even under the AIA version.

[5] WO 00/66045, published Nov. 9, 2000 (Ex. 1006). Petitioner asserts that Michelson is prior art to the '234 patent under pre-AIA 35 U.S.C. § 102(b). *See* Pet. 4. Patent Owner does not dispute this position. We determine that Petitioner has made an adequate showing, at this stage of the proceeding, that Michelson is prior art.

[6] US 6,432,106 B1, issued Aug. 13, 2002 (Ex. 1007). Petitioner asserts that Fraser '106 is prior art to the '234 patent under pre-AIA 35 U.S.C. §§ 102(a) and 102(e). *See* Pet. 4. Patent Owner does not dispute this position. We determine that Petitioner has made an adequate showing, at this stage of the proceeding, that Fraser '106 is prior art.

circumstances, but not requiring institution under any circumstances); *Harmonic Inc. v. Avid Tech., Inc.*, 815 F.3d 1356, 1367 (Fed. Cir. 2016) (explaining that under § 314(a), "the PTO is permitted, but never compelled, to institute an IPR proceeding"); *see also Cuozzo Speed Techs., LLC v. Lee*, 136 S. Ct. 2131, 2140 (2016) ("[T]he agency's decision to deny a petition is a matter committed to the Patent Office's discretion. See [5 U.S.C.] § 701(a)(2); 35 U.S.C. § 314(a) (no mandate to institute review)." (additional citation omitted)).

As discussed above, *on the same day*, Petitioner filed two petitions (in this proceeding and in IPR2020-00274) challenging certain claims of the '234 patent. *See supra* § I.A. In line with the Board's Consolidated Trial Practice Guide, Petitioner provided a ranking for the two petitions and an explanation of why the Board should exercise its discretion to institute an additional petition if one petition satisfies Petitioner's burden under 35 U.S.C. § 314(a). *See* Paper 3; TPG 59–61.

Petitioner states that "Patent Owner has asserted infringement of eighteen claims from the '234 patent against Petitioner[]" and that "[t]he challenged claims are lengthy and recite limitations covering multiple aspects of a spinal implant." Paper 3, at 2. According to Petitioner, "two petitions are necessary to address each of the various components and combinations implicated as well as address Patent Owner's claim construction positions." *Id.* at 3; *see also id.* at 5 ("Petitioner[] need[s] more than the allotted 14,000 words in one petition to present a thorough analysis of each ground in this case."). Petitioner also highlights that the two petitions "rely on the same prior art combinations to demonstrate unpatentability of the '234 claims, **<u>but challenge different claim sets</u>**," with

the Petition in this proceeding challenging claims 35, 37, and 39 and the petition in IPR2020-00274 challenging claims 1–10, 13, 14, 16, 18–20, 22, 24, 25, 28, 29, 31, and 32. *Id.* at 5.[7]

Patent Owner does not address these issues in the Preliminary Response. *See also* TPG 60–61 (discussing how a patent owner could respond to this type of filing). For the reasons provided by Petitioner as summarized above, we are persuaded, in light of the particular circumstances here, that two petitions were necessary to adequately challenge the 26 claims of the ’234 patent at issue between this proceeding and IPR2020-00274.

B. The Level of Ordinary Skill in the Art

The level of ordinary skill in the art is “a prism or lens” through which we view the prior art and the claimed invention. *Okajima v. Bourdeau*, 261 F.3d 1350, 1355 (Fed. Cir. 2001). The person of ordinary skill in the art is a hypothetical person presumed to have known the relevant art at the time of the invention. *In re GPAC Inc.*, 57 F.3d 1573, 1579 (Fed. Cir. 1995). In determining the level of ordinary skill in the art, we may consider certain factors, including the “type of problems encountered in the art; prior art solutions to those problems; rapidity with which innovations are made; sophistication of the technology; and educational level of active workers in the field.” *Id.* (internal quotation marks and citation omitted).

---

[7] Petitioner appears to mistakenly provide the list of claims in the ’537 patent challenged in IPR2020-00275 as the list of the claims in the ’234 patent challenged in IPR2020-00274. *Compare* Paper 3, at 2, 5, *with* Pet. 2 (listing the claims in the ’537 patent challenged in IPR2020-00275).

Petitioner contends that a person having ordinary skill in the art "at the time of the alleged invention would have had at least a Bachelor of Science degree in the field of Mechanical, Biomechanical or Biomedical engineering with at least 5 years of experience designing and developing orthopedic implants and/or spinal interbody devices." Pet. 13–14.[8]

Patent Owner does not dispute Petitioner's proposed definition of the level of ordinary skill in the art, which appears consistent with the record at this stage of the proceeding, including the prior art. *See GPAC Inc.*, 57 F.3d at 1579. For purposes of this Decision, we adopt the definition of the level of ordinary skill in the art proposed by Petitioner.

C. Claim Construction

1. Overview

In *inter partes* reviews, the Board interprets claim language using the district-court-type standard, as described in *Phillips v. AWH Corp.*, 415 F.3d 1303 (Fed. Cir. 2005) (en banc). *See* 37 C.F.R. § 42.100(b). Under that standard, we generally give claim terms their ordinary and customary meaning, as would be understood by a person of ordinary skill in the art at the time of the invention, in light of the language of the claims, the specification, and the prosecution history. *See Phillips*, 415 F.3d at 1313–14. Although extrinsic evidence, when available, may also be useful when construing claim terms under this standard, extrinsic evidence should be considered in the context of the intrinsic evidence. *See id.* at 1317–19.

---

[8] In IPR2020-00274, Petitioner stated the same level of ordinary skill in the art, except included "at least 5–10 years of experience" rather than, as here, "at least 5 years of experience." *See* -00274 Pet. 14–15; Pet. 13–14. We view these proposed levels of skill as the same in scope. We encourage the parties to address this issue, if necessary, during trial.

Petitioner proposes constructions for the following terms: (1) "base plate"; (2) "lip osteophyte"; (3) "means for interacting"; and (4) "means for permitting movement." Pet. 14–20. In the claim construction section of its Preliminary Response, Patent Owner addresses only the term "base plate." Prelim. Resp. 1–11; *see also id.* at 2 (stating Patent Owner "addresses other constructions proposed by Petitioner[] as necessary in the sections that follow when discussing the numerous deficiencies in the Petition").

Based on the current record and for purposes of this Decision, we construe the term "base plate." We do not discern a need to construe explicitly any of the other claim language discussed in this section or any other claim terms because doing so would have no effect on the analysis below. *See Nidec Motor Corp. v. Zhongshan Broad Ocean Motor Co.*, 868 F.3d 1013, 1017 (Fed. Cir. 2017) (stating that "we need only construe terms 'that are in controversy, and only to the extent necessary to resolve the controversy'") (quoting *Vivid Techs., Inc. v. Am. Sci. & Eng'g, Inc.*, 200 F.3d 795, 803 (Fed. Cir. 1999)).

2. "Base Plate"

Petitioner proposes that the term "base plate" should be construed as "[a] fixation plate to stabilize adjacent vertebrae for fusion, which is distinct from bone graft material deployed across a bone graft site and **is not used with a load-bearing fusion cage**." Pet. 15. This proposed construction includes a negative limitation—not in Patent Owner's proposed construction (and shown with Petitioner's emphasis above)—requiring that the "base plate" not be "used with a load-bearing fusion cage." *Id.* (emphasis omitted).

Patent Owner, on the other hand, proposes that the term "base plate" should be construed as "[a] fixation plate of a bone plate stabilization system to stabilize adjacent vertebrae for fusion and **distinct from a spacer** and bone graft material deployed across a bone graft site." Prelim. Resp. 2 (emphasis added). Patent Owner proposes a different additional limitation—not included in Petitioner's proposed construction (and shown with our emphasis above)—requiring that the "base plate" is "distinct from a spacer." *Id.* We first address each of the additional requirements proposed as part of Petitioner's and Patent Owner's constructions (shown in emphasis above), then address a requirement included in both proposed constructions, and then address one additional requirement included in Patent Owner's proposed construction (not disputed by the parties).

a. Petitioner's Proposed Requirement—"not used with a load-bearing fusion cage"

In support of the portion of Petitioner's proposed construction requiring that the term "base plate" is "not used with a load-bearing fusion cage," Petitioner relies on an alleged prosecution history disclaimer based on arguments made by the patent applicant during prosecution, in which, according to Petitioner, "Patent Owner took the position . . . that the claims do not cover implants that use load-bearing cages/spacers." Pet. 15. In particular, Petitioner cites the following argument made by the patent applicant during prosecution of the application that issued as the related '537 patent:

> [**F**]**usion cage 110 is load-bearing** between the two vertebral bodies. The plate 120, which is applied after the load-bearing fusion cage 110 is already in place, keeps the load-bearing fusion cage 110 in place. The **plate 120 is applied, again after the**

> **load-bearing fusion cage 110 is in place**, to the respective anterior face of each of the two vertebral bodies.

Pet. 15 (quoting Ex. 1004, at 222, with emphasis added by Petitioner). Based on this particular argument that the patent applicant advanced during prosecution, Petitioner contends that the claimed "base plate" cannot be used with a separate load-bearing spacer or cage. *See id.* at 16 ("This prosecution history disclaimer is both clear and unambiguous, and, as such, restricts Patent Owner from now arguing that the claimed base plate can be used with a separate load bearing spacer/cage." (emphasis omitted)).

We are not persuaded by this argument, however, because Petitioner has not demonstrated that the statements relied upon amount to a "disavowal . . . 'clear and unmistakable' to one of ordinary skill in the art." *See Elbex Video. Ltd. v. Sensormatic Elecs. Corp.*, 508 F.3d 1366, 1371 (Fed. Cir. 2007) (quoting *Omega Eng'g, Inc. v. Raytek Corp.*, 334 F.3d 1314, 1326 (Fed. Cir. 2003)). Based on the record at this stage of the proceeding, we understand the examiner during prosecution to have identified plate 120 in Fraser '222[9] (rather than, for example plate 120 *and* fusion cage 110) as the "base plate" recited in the claims of the application that later issued as the '537 patent. This view is supported by other statements in the prosecution history of the '537 patent. *See MIT v. Shire Pharms., Inc.*, 839 F.3d 1111, 1122 (Fed. Cir. 2016) (rejecting an alleged prosecution history disclaimer based on consideration of the statements "[i]n the context of the entire prosecution history"). For example, in the same filing that includes the alleged disclaimer identified by Petitioner, the applicant summarized a prior telephone interview as including a discussion of the "specifics of the Fraser

[9] "Fraser '222" refers to US 7,112,222 B2 (Ex. 1010).

plate 120" in which "[i]t was noted that the plate 120 is for application onto the anterior side/face of vertebral bones" and "*not for location between the bones*." Ex. 1004, at 218 (emphasis added). Then, in the Notice of Allowance that issued weeks later, the examiner included in the reasons for allowance that "no reference . . . could be found which disclose[s] or suggest[s] a bone stabilization plate with a *base plate configured to fit primarily between anterior portions of adjacent bones' lip osteophytes*" as recited in, for example, issued claim 1 of the '537 patent. *Id.* at 233 (emphasis added) (providing reasons for allowance), 211 (providing amendments to claim 1).

Viewed in the context of these statements, in the discussion highlighted by Petitioner, the applicant did not disclaim the use of the recited "base plate" with a separate fusion cage; instead, in that discussion, the applicant merely asserts that the identified "base plate"—i.e., plate 120 in Fraser '222—does not satisfy the requirement, in each independent claim, that the "base plate" be "configured to fit primarily between" certain recited portions of the bones' lip osteophytes, either to "bear weight" or "while bearing weight." *See* Ex. 1004, at 222–23. The reason for this, as explained by the applicant, is that, in Fraser '222, fusion cage 110 "is load-bearing between the two vertebral bodies" whereas plate 120 is "applied . . . after the load-bearing fusion cage 110 is in place, to the respective anterior face of each of the two vertebral bodies." *Id.* at 222; *see also id.* at 221 ("The <u>fusion cage is then positioned between the vertebrae</u> . . . . **<u>Once the fusion cage is in position</u>**<u>, the plate is mated to the anterior face of the fusion cage . . . .</u>") (quoting Ex. 1010, 8:39–49, with emphasis added by applicant). Thus, contrary to Petitioner's assertion (Pet. 15–16), the applicant did not disclaim

the use of the recited "base plate" with a load-bearing fusion cage.[10] For the forgoing reasons, we do not construe "base plate" as requiring the negative limitation that it must not be used with a load-bearing fusion cage.

b. Patent Owner's Proposed Requirement—"distinct from a spacer"

Patent Owner contends that a skilled artisan would understand that a "base plate" is "distinct from a spacer." Prelim. Resp. 3. Patent Owner explains that a "person of ordinary skill would understand a spacer to refer to an interbody device . . . [for] insertion at a bone graft site." *Id.* at 3–4 (citing Ex. 2001, S158–59, S161–62, Figs. 1, 3; Ex. 2002, 5:3–5, 6:5–7, 6:22–67, 9:55–63, 11:2–5, 11:44–67, 12:1–10, 12:25–28, 12:65–13:3, Figs. 5–8). Patent Owner further explains that a "spacer bears weight from the vertebral bodies in the spinal column to promote fusion." *Id.* at 4 (citing Ex. 2001, S158, S160–61; Ex. 2002, 2:1–3, 5:5–10, 10:14–51, 12:49–59).

---

[10] To the extent Petitioner continues to assert its prosecution history disclaimer argument at trial, the parties are encouraged to develop during briefing the issue of whether argument in the prosecution history of the application leading to the '537 patent can disclaim scope in the claims of the '234 patent given, for example, (1) the issuing dates of each patent and the date of the alleged disclaimer, (2) the additional written description in the '537 patent, (3) the nature of the particular priority relationship between the patents, and (4) any relevant differences in the claim language between the patents. *See, e.g., Georgia-Pacific Corp. v. U.S. Gypsum Co.*, 195 F.3d 1322 (Fed. Cir. 1999); *Microsoft Corp. v. Multi-Tech Sys., Inc.*, 357 F.3d 1340 (Fed. Cir. 2004); *Verizon Servs. Corp. v. Vonage Holdings Corp.*, 503 F.3d 1295 (Fed. Cir. 2007); *Capital Mach. Co. v. Miller Veneers, Inc.*, 524 F. App'x 644 (Fed. Cir. 2013) (nonprecedential). The parties should also consider addressing whether the decision in *Sinorgchem Co., Shandong v. International Trade Commission*, 511 F.3d 1132 (Fed. Cir. 2007), cited by Patent Owner (Prelim. Resp. 4 n.3), applies to the facts here.

We are not persuaded by Patent Owner's argument. Despite Patent Owner's numerous citations to Exhibits 2001 and 2002, we find nothing in this extrinsic evidence to support Patent Owner's assertion that a skilled artisan would understand that a "base plate" *must* be distinct from a "spacer." Rather, Exhibits 2001 and 2002 merely describe examples of base plates *that are* separate from an interbody spacer (*see, e.g.*, Ex. 2002, Figs. 7, 8). Neither of these documents defines "base plate," or otherwise establishes that one of ordinary skill in the field at issue would understand that a "base plate" must be distinct from a "spacer." Furthermore, we find nothing in the claims or the written description of the '234 patent, such as a lexicographic definition of "base plate," that supports such a requirement. We further note that Patent Owner does not submit declaration testimony to support its position that a skilled artisan would have understood "base plate" to be distinct from a "spacer," rendering Patent Owner's position as to the alleged understanding of a skilled artisan as untenable attorney argument. *See Elbit Sys. of Am., LLC v. Thales Visionix, Inc.*, 881 F.3d 1354, 1359 (Fed. Cir. 2018) (rejecting attorney argument as to the alleged understanding of one of skill in the art on an issue when no evidence was presented). Because the evidence of record fails to support Patent Owner's position that the claimed "base plate" must be "distinct from a spacer," we decline to adopt Patent Owner's proposed requirement.

c. Petitioner and Patent Owner's Common Proposed Requirement—"distinct from" "bone graft material deployed across a bone graft site"

Both Petitioner and Patent Owner include as part of their proposed constructions that the claimed "base plate" is a "fixation plate" that functions to "stabilize adjacent vertebrae for fusion" and is "distinct from" "bone graft

material deployed across a bone graft site." *See* Pet. 15 ("Patent Owner and Petitioner[] currently agree that [one of ordinary skill in the art] would understand the term 'base plate' to include 'a fixation plate to stabilize adjacent vertebrae for fusion' which is 'distinct from bone graft material deployed across a bone graft site.'" (citing Sherman Decl. ¶ 53)); Prelim. Resp. 3 ("The parties agree that a base plate is a 'fixation plate' that functions to 'stabilize adjacent vertebrae for fusion' and is 'distinct from . . . bone graft material [deployed] across a bone graft site.'").

In their filings in this proceeding, neither Petitioner nor Patent Owner provides argument or identifies evidence to support the alleged requirement that the "base plate" be "distinct from" "bone graft material deployed across a bone graft site." Although the parties agree on this aspect of their proposed constructions, for the reasons below, we do not find the asserted distinction supported by the record at this stage of the proceeding. *See Exxon Chem. Patents, Inc. v. Lubrizol Corp.*, 64 F.3d 1553, 1556 (Fed. Cir. 1995) ("[T]he judge's task is not to decide which of the adversaries[' constructions] is correct. Instead the judge must independently assess the claims, the specification, . . . and declare the meaning of the claims.").

Based on our review of the record, we note that *some* independent claims in the '234 patent include recitations that could be seen to support the asserted distinction between the "base plate" and "bone graft material." For example, claim 35 recites that the claimed "system" includes a "base plate" "for retaining bone graft material." Ex. 1001, 12:10–11. In addition, claim 41 recites the step of "positioning a U-shaped base plate onto . . . bone graft material." *Id.* at 13:19–14:1. Independent claims 1, 22, and 34, however, do not recite "bone graft material" at all. Under the doctrine of claim

differentiation, these differences support that the asserted distinction is *not* part of the proper understanding of the term "base plate" itself. *See Caterpillar Tractor Co. v. Berco, S.p.A.*, 714 F.2d 1110, 1115–16 (Fed. Cir. 1983) (rejecting an argument that a structural relationship recited in two independent claims should limit another independent claim that did not recite the same relationship, stating: "Courts may not introduce into a claim limitations which are explicitly contained in other claims."). Here, claims 1, 22, and 34 do not appear to exclude from their scope a "base plate" that was *indistinct* from "bone graft material" (which is not recited in those claims).

Although the Specification describes embodiments in which a "base plate" is distinct from bone graft material (*see, e.g.*, Ex. 1001, Figs. 1, 3), it is generally improper to read limitations from specific embodiments into the claims. *See Cadence Pharms. Inc. v. Exela PharmSci Inc.*, 780 F.3d 1364, 1369 (Fed. Cir. 2015) ("[E]ven if all of the embodiments discussed in the patent included a specific limitation, it would not be proper to import from the patent's written description limitations that are not found in the claims themselves." (internal quotations omitted)). Accordingly, in our preliminary construction, we do not include a requirement that the "base plate" is distinct from bone graft material.[11]

d. Patent Owner's Proposed Requirement—"of a bone plate stabilization system"

Patent Owner includes as part of its proposed construction that the "base plate" is part "of a bone plate stabilization system." Prelim. Resp. 2.

[11] We note that neither Petitioner nor Patent Owner relies, in the context of any argument, on the presence of this alleged requirement in the construction of "base plate."

In a footnote that provides the only discussion of this proposed requirement, Patent Owner cites portions of the ’234 patent in support. *Id.* at 3 n.2 (citing Ex. 1001, 2:40–41, 2:60–62, 4:3–4, claim 22).

We are not persuaded that this proposed requirement should be included in the construction of “base plate.” We first address the claim language highlighted by Patent Owner. As an initial matter, we note that, although the title of the ’234 patent includes the phrase “BONE PLATE STABILIZATION SYSTEM,” the claims—and specifically only *some* of the independent claims—use a different phrase: “bone stabilization plate system.” *See* Ex. 1001, code (54), 10:38 (claim 22), 12:10 (claim 35), 12:58 (claim 40). Further, although the preambles of each independent apparatus claim (numbers 22, 35, and 40) recite a “bone stabilization plate system,” each independent method claim (numbers 1, 34, and 41) recites a “base plate” but does not recite a “bone stabilization plate system” (or any other “system”). *See id.* at 8:62–14:17. Under the doctrine of claim differentiation, these differences support that the asserted requirement is *not* part of the proper understanding of the term “base plate” itself. *See Caterpillar Tractor*, 714 F.2d at 1115–16. Here, claims 1, 34, and 41 do not appear to exclude from their scope practicing the method on a “base plate” that is *not* part of a “bone stabilization plate system” (which is not even recited in those claims).

Turning to the passages in the written description cited by Patent Owner, the first actually characterizes the “present invention” as a “bone stabilization *device*” and method of use, rather than a “bone stabilization *plate system*.” Ex. 1001, 2:40–41 (emphasis added). And although the remaining two passages do refer to a “bone stabilization plate system,” those

passages make clear that they only describe particular disclosed embodiments. *See id.* at 2:60–62 ("*In another embodiment*, the invention is directed to bone stabilization plate system comprising a base plate having bottom surface and first and second ends." (emphasis added)), 3:67–4:4 ("A *particularly preferred bone stabilization plate system* 10 constructed in accordance with the present invention is shown in FIGS. 1 to 4. *The depicted bone stabilization plate system* comprises a base plate 20 having first and second ends . . . ." (emphasis added)). On the record here, we do not read these limitations into the meaning of the term "base plate." *See SuperGuide Corp. v. DirecTV Enters., Inc.*, 358 F.3d 870, 875 (Fed. Cir. 2004) ("Though understanding the claim language may be aided by the explanations contained in the written description, it is important not to import into a claim limitations that are not a part of the claim."). Accordingly, in our preliminary construction, we do not include a requirement that the "base plate" is part "of a bone plate stabilization system."[12]

e. Preliminary Construction of "Base Plate"

For the reasons above, at this stage of the proceeding, and for purposes of this Decision, we construe "base plate" as a "fixation plate to stabilize adjacent vertebrae for fusion." The parties are hereby given notice that claim construction, in general, is an issue to be addressed at trial and claim constructions expressly or implicitly addressed in this Decision are

[12] We note that neither Petitioner nor Patent Owner relies, in the context of any argument, on the presence of this alleged requirement in the construction of "base plate." *See* Prelim. Resp. 3 n.2 (stating that "the numerous, specific deficiencies in Petitioner['s] arguments do not turn on whether this portion of the proposed construction is included or not").

preliminary in nature. Claim construction will be determined at the close of all the evidence and after any hearing. The parties are expected to assert all of their claim construction arguments and evidence in the Petition, Patent Owner's Response, Petitioner's Reply, Patent Owner's Sur-reply, or otherwise during trial, as permitted by our rules.

D. Asserted Obviousness of Claims 35, 37, and 39 Based on Michelson

Petitioner asserts that claims 35, 37, and 39 of the '234 patent are unpatentable under 35 U.S.C. § 103(a) based on Michelson. Pet. 4, 21–60. Patent Owner provides arguments addressing this asserted ground of unpatentability. Prelim. Resp. 12–21. We first summarize aspects of Michelson.

1. Michelson

According to Michelson, certain spinal instabilities can be treated by fusion, which is "the joining together permanently of the unstable vertebrae via a bridge of bone so as to eliminate all motion along [a] portion of the spine." Ex. 1006, at 2.[13] Michelson discloses various "interbody spinal fusion implants" that are "placed at least in part within a disc space and in contact with each of the vertebral bodies adjacent that disc space for spacing apart and aligning those vertebral bodies and for allowing for the growth of bone in continuity from vertebral body to adjacent vertebral body." *Id.* Michelson provides this summary of the process:

> In order to perform anterior interbody spinal fusion, a significant amount of disc material is removed from the

[13] Both Petitioner and Patent Owner cite to the internal pagination in Michelson rather than the page numbers added by Petitioner (e.g., "Petitioners 1006-1" on the first page). For consistency, we do the same.

> interspace to be fused. After removing the disc material, the disc space is filled with an implant, which generally includes bone or bone in combination with a reinforcing structure, such as an artificial (other than bone) interbody spinal fusion implant.

Ex. 1006, at 3. Figures 24 and 25 of Michelson are reproduced below:

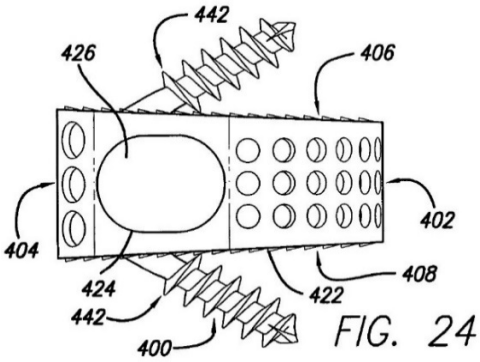

FIG. 24

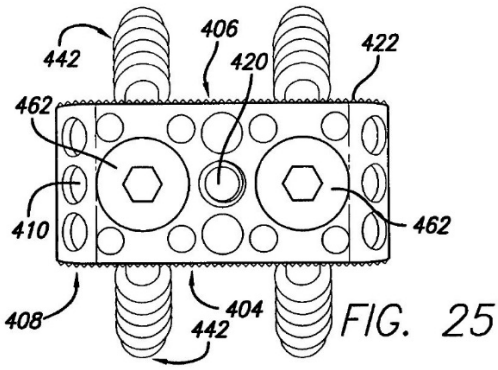

FIG. 25

Figure 24 is "a side elevation view of the fourth embodiment implant with opposed bone engaging screws." Ex. 1006, at 7; *see also* Pet. 22 (stating that "[t]his ground relies on Michelson['s] fourth embodiment, namely implant 400"). Figure 25 is "a trailing end view of the implant of Figure 24 with screws and screw locks in place." Ex. 1006, at 7. Michelson describes implant 400 as including convex leading end 402 and opposite trailing end 404, both of which are "highly perforate to allow for vascular access to hollow interior 426 of implant 400, and to allow for the growth of bone therethrough." *Id.* at 16. Implant 400 also includes opposed upper and lower vertebral body engaging surfaces 406 and 408, respectively, and bone screws 442. *Id.* at 16–17. Figure 25 also depicts "threaded lock members 462, preventing screws 442 from backing out." *Id.* at 17.

Figures 23 and 21 are reproduced below:

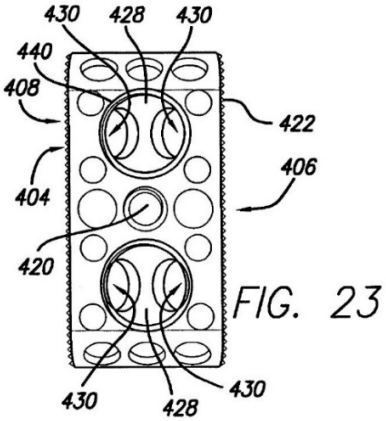

FIG. 23

FIG. 21

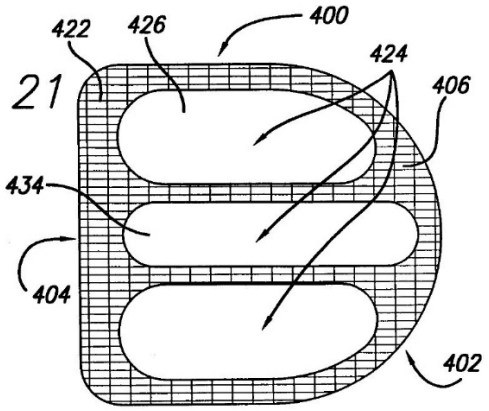

Figure 23 is a "trailing end view" and Figure 21 is a "top plan view" of the same embodiment shown above. Ex. 1006, at 6. Figure 23 shows two common holes 440 (which receive threaded lock members 462 shown in Figure 25) as well as four holes 430, each of which is "adapted to receive a bone screw 442" that is directed "into [a] vertebral body itself at an angle preferably between 25° and 75°." *Id.* at 17. As shown in Figure 21, Michelson discloses that "[i]mplant upper and lower surfaces 406 and 408 have large windows or slots 424 therethrough, each in communication with the central hollow chamber 426 of the implant and each forming a direct path to its counterpart on the opposite surface through implant 400." *Id*. at 16–17. Michelson also discloses that "[t]o the extent that such implants are hollow and have openings through the surfaces, those openings and those hollows can preferably be filled with fusion promoting substances, including substances that are osteogenic, osteo-inductive, or osteo-conductive, whether naturally occurring, or artificially produced." *Id.* at 9.

2. Analysis

a. Independent Claim 35

For independent claim 35, Petitioner contends that Michelson, when modified as proposed, satisfies each limitation. Pet. 21–42. To support its arguments, Petitioner identifies certain passages in Michelson and explains the significance of each passage with respect to the corresponding claim limitation. *Id.* Petitioner also articulates reasons that one of ordinary skill in the art would have allegedly modified circular holes 430 in Michelson into slots. *Id.* at 37–42; *see id.* at 41 (showing a modified version of Michelson's Figure 23 with holes 430 modified into slots). Patent Owner argues that Petitioner has failed to show that Michelson discloses a "base plate" under either Patent Owner's proposed construction or Petitioner's proposed construction. *See* Prelim. Resp. 13–15 (discussing Patent Owner's proposed construction), 16–17 (discussing Petitioner's proposed construction).

We have reviewed Petitioner's contentions with respect to the limitations of claim 35 and, for the reasons below, we determine that the Petition shows a reasonable likelihood that Petitioner would prevail with respect to the contention that claim 35 would have been obvious based on Michelson. Pet. 21–42.

(1) The "Base Plate" Limitation

Claim 35 recites "a base plate" ("the 'base plate' limitation"). Ex. 1001, 12:10–11. Addressing this limitation, Petitioner provides the following side-by-side comparison of annotated versions of Figure 4 of the '234 patent and Figure 25 of Michelson:

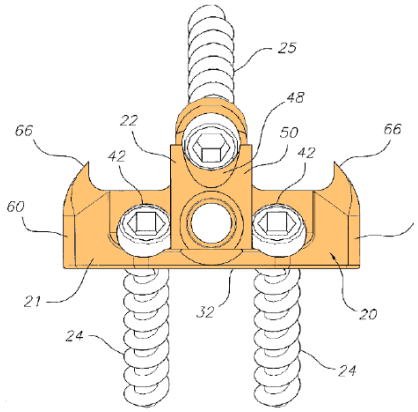

'234 patent, Ex.1001, Fig.4

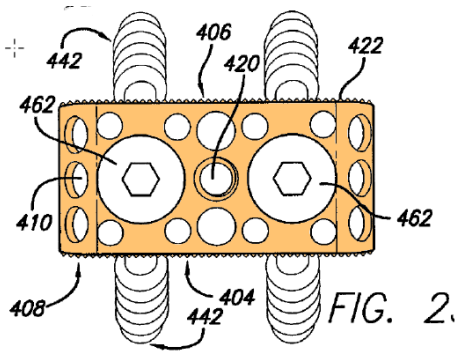

Michelson '045, Ex.1006, Fig.25

Pet. 27. For the annotated version of Figure 4 of the '234 patent, Petitioner added orange overlay to base plate 20, and for the annotated version of Figure 25 of Michelson, Petitioner added orange overlay to all the depicted structure, except bone screws 442 and threaded lock members 462. *Id.* Referring to these annotated Figures, Petitioner states that, "like the '234 patent, Michelson . . . discloses a fixation plate 404 to stabilize adjacent vertebrae for fusion." *Id.* at 26–27.[14]

---

[14] Although Petitioner initially refers to the structure overlaid in orange in the annotated version of Figure 25 of Michelson as "fixation plate 404," Petitioner then refers to the same structure as "this implant." Pet. 27. We note that reference numeral 404 in Michelson is only the "trailing end" of "implant 400." *See, e.g.*, Ex. 1006, at 17. Based on the totality of the record, we view Petitioner's reference to reference numeral 404 (Pet. 27) as a typographical error. *Cf.* Pet. 49–50 (referring to "trailing end 404" in Michelson). Accordingly, we understand Petitioner to identify implant 400 as the "base plate," as overlaid in orange in the annotated version of Figure 25 of Michelson shown above. This understanding is supported by other annotated Figures in the Petition. *See, e.g.*, Pet. 29 (showing an annotated version of Figure 24 of Michelson with certain structure overlaid in orange and identified as a "base plate"). Patent Owner has a similar understanding, as reflected in its arguments on this issue. *See, e.g.*, Prelim. Resp. 13 ("The fixation plate identified by Petitioner[]—Michelson's implant 400—thus is not a 'base plate' because it is not distinct from a spacer.").

Patent Owner presents two related arguments. First, Patent Owner argues that Petitioner has failed to show that Michelson discloses a "base plate" under Patent Owner's proposed construction. *See* Prelim. Resp. 13–15. Specifically, Patent Owner contends that "[t]he fixation plate identified by Petitioner[]—Michelson's implant 400— . . . is not a 'base plate' because it is not distinct from a spacer." *Id.* at 13. In support, Patent Owner first asserts that Petitioner has equated the terms "spacer" and "fusion cage" (or just "cage") (*id.* (citing Pet. 15–16, 63–64)) and then highlights Petitioner's assertions that Michelson's implant 400 is "***integrated with a load-bearing fusion cage***" (*id.* at 14 (quoting Pet. 28)). According to Patent Owner, because Petitioner argues that Michelson's implant 400 "is a unitary, single component implant structure that incorporates or includes an integral fusion cage/spacer that is ***indistinct*** from the fixation plate, this implant relied on by Petitioner[] fails to satisfy the 'base plate' limitation under Patent Owner's construction of this term." *Id.* at 15 (citing Pet. 27–28).

At this stage of the proceeding, Patent Owner's first argument does not identify a deficiency in Petitioner's position. As discussed above, we preliminarily construe "base plate" as a "fixation plate to stabilize adjacent vertebrae for fusion." *See supra* § II.C.2.e. Because our preliminary construction *does not* include the "distinct from a spacer" requirement from Patent Owner's proposed construction, we are not persuaded by this argument. *See In re Self*, 671 F.2d 1344, 1348 (CCPA 1982) (rejecting arguments "not based on limitations appearing in the claims").

Second, Patent Owner argues that Petitioner has failed to show that Michelson discloses a "base plate" under Petitioner's proposed construction. *See* Prelim. Resp. 16–17. Specifically, Patent Owner contends that

Petitioner "tacitly admit[s] that Michelson fails to disclose a 'base plate' according to the literal terms of Petitioner['s] proposed construction because the Michelson implant ***is*** used with a load-bearing fusion cage—an integrated one." Prelim. Resp. 16. According to Patent Owner, Petitioner "surreptitiously adopt[s] and appl[ies] a modified version of [its] proposed construction that inserts an additional qualifier—'separate,'" but Petitioner "offer[s] no evidence or argument showing why [its] proposed construction [of] 'base plate' should be modified in such a manner." *Id.* at 16, 17.

At this stage of the proceeding, Patent Owner's second argument also does not identify a deficiency in Petitioner's position. As an initial matter, although Petitioner's statement of its construction does not include the word "separate" before "load-bearing fusion cage," like Patent Owner, we understand Petitioner to have implicitly included "separate" in its proposed construction. *See* Prelim. Resp. 16–17 (citing Pet. 28 (stating that Michelson's implant 400 "is not used with a *separate* load-bearing fusion cage" and "does not use a *separate* load-bearing fusion cage" (emphasis added)). Here, Patent Owner does not address whether Michelson discloses a "base plate" under the proper understanding of Petitioner's proposed construction of that term; instead, Patent Owner contests a portion of Petitioner's proposed construction, specifically the requirement that the "base plate" is "not used with a [separate] load-bearing fusion cage." *See, e.g.*, Prelim. Resp. 17 ("Accordingly, the Board should not adopt Petitioner['s] unexplained, implicit modification to its proposed construction of 'base plate' and [should] find that Petitioner has failed to satisfy its burden to show Michelson discloses a 'base plate' under Petitioner['s] actual proposed construction."). Regardless, as discussed above, our preliminary

construction *does not* include that additional requirement proposed by Petitioner. *See supra* § II.C.2.a. Thus, Petitioner need not show that Michelson satisfies that requirement. *See Self*, 671 F.2d at 1348 (rejecting arguments "not based on limitations appearing in the claims").

As discussed above, Petitioner identifies implant 400 as a "fixation plate . . . to stabilize adjacent vertebrae for fusion" (Pet. 26–27 (citing Ex. 1006, Fig. 25))—in other words, as a "base plate" under our preliminary construction. At this stage of the proceeding, Patent Owner does not challenge this assertion by Petitioner, which we determine is supported by the record. *See, e.g.*, Ex. 1006, at 2 (discussing the use of the disclosed "interbody spinal fusion implants" for fusion, i.e., the "joining together permanently of the unstable vertebrae via a bridge of bone so as to eliminate all motion along that portion of the spine"). For these reasons, at this stage of the proceeding and on the current record, we determine that Petitioner has made a sufficient showing that Michelson discloses the "base plate" limitation under the preliminary construction above.

(2) The Remaining Aspects of Petitioner's Contentions

Patent Owner does not offer any arguments specifically addressing the remaining limitations of claim 35 or Petitioner's reasons to modify Michelson as proposed. *See* Prelim. Resp. 12–17. We have reviewed these aspects of Petitioner's contentions, and determine that the Petition provides a sufficient showing, at this stage of the proceeding, that Michelson, when modified as proposed, satisfies each limitation and that one of ordinary skill in the art would have had reason to modify Michelson as proposed. *See* Pet. 21–42. For the reasons above, we determine, based on the current record, that the Petition shows a reasonable likelihood that Petitioner would prevail

with respect to the contention that claim 35 would have been obvious based on Michelson.

b. Claim 37

For dependent claim 37, Petitioner contends that Michelson, when modified as proposed, satisfies each limitation. Pet. 42–45. Patent Owner argues that Petitioner has failed to show that Michelson discloses "lateral tabs," as recited in claim 37. *See* Prelim. Resp. 18–21. For the reasons below, we determine that the Petition does not show a reasonable likelihood that Petitioner would prevail with respect to the contention that claim 37 would have been obvious based on Michelson.

Claim 37 requires that the "base plate" recited in claim 35 includes "two lateral tabs" ("the 'lateral tabs' limitation"). Ex. 1001, 12:32–37. Addressing this limitation, Petitioner provides the following annotated version of Figure 21 of Michelson:

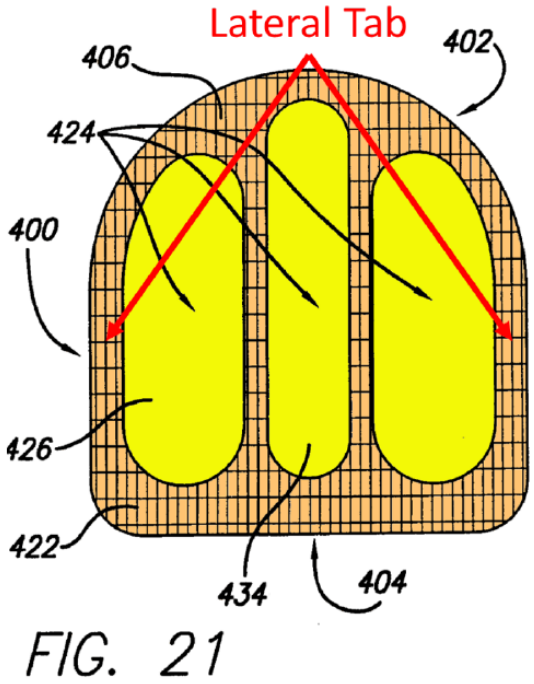

Michelson '045, Ex.1006, Fig.21

Pet. 43. For the annotated version of Figure 21, Petitioner added (1) orange overlay to implant 400, (2) yellow overlay to three interior spaces within implant 400, and (3) text with red arrows identifying two portions of implant 400 as "Lateral Tab[s]." *Id.* Referring to this annotated Figure, Petitioner states that Michelson "discloses two lateral tabs in [F]igure 21 (a top cross-sectional []view)." *Id.*

Patent Owner argues that Petitioner has failed to show that Michelson discloses the "lateral tabs" limitation. *See* Prelim. Resp. 18–21. Patent Owner begins by stating that "[t]he embodiment of the base plate depicted in Figure 2 of the '234 patent illustrates an example of a base plate having such lateral tabs, designated as element 60 in the specification," and by providing the following annotated version of Figure 2. *Id.* at 18.

FIG.2

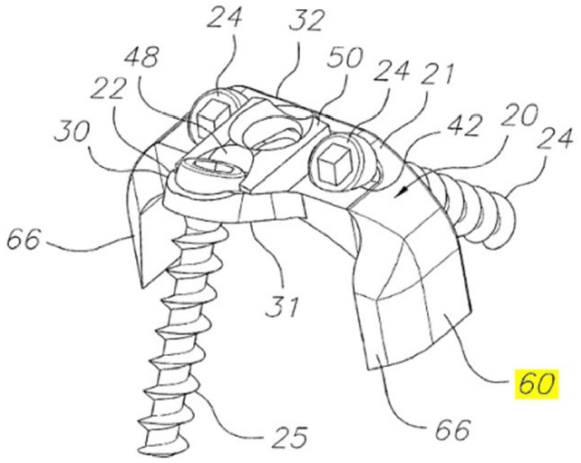

Prelim. Resp. 18. In the annotated version of Figure 2, Patent Owner added yellow highlight to reference numeral 60. *Id.* Patent Owner argues that Petitioner, when addressing this limitation, "point[s] to the lateral sides of the implant" and "thus improperly seek to conflate a 'tab'—*i.e.*, a projection,

flap, or short strip attached to an object—with the side(s) of an object." *Id.* at 19. Patent Owner also contends that Petitioner's position "is contrary to how these two terms ('tabs' versus 'side') are used in the '234 patent to describe two different types of structures." *Id.* at 19–20 (citing Ex. 1001, 4:24–28 (describing *side* wall 32), 6:33–38 (describing lateral *tabs* 60)). According to Patent Owner, Petitioner's position on this issue is "inconsistent" with its construction for "tab" in the Delaware Litigations as a "'projection' on an object." *Id.* at 20–21 (discussing Ex. 1017, at 4 (showing Petitioner's proposed construction in the Delaware Litigations)).

At this stage of the proceeding and on the current record, we agree with Patent Owner that Petitioner has not made an adequate showing that Michelson discloses the "lateral tabs" limitation. *See* Prelim. Resp. 18. Petitioner identifies portions of implant 400 in Michelson as the recited "two lateral tabs," but does not adequately explain *why* those portions are "tabs" under a proper understanding of that term. Although Patent Owner does not provide a citation for its asserted understanding of a "tab"—as "a projection, flap, or short strip attached to an object" (Prelim. Resp. 19)—that understanding is consistent with the "tabs" depicted in Figure 2 of the '234 patent and the related description. *See* Ex. 1001, 6:33–38 (describing lateral tabs 60 as "integrally formed with the primary member 21 and extending outwardly from opposite ends of the bottom surface 26 of the primary member to form, together with the primary member, a unitary substantially U-shaped structure").[15]

---

[15] Patent Owner's asserted understanding of "tab" also aligns with Petitioner's proposed construction in the Delaware Litigations (which has not been proposed in this proceeding). *See* Ex. 1017, at 4.

Even if Petitioner *had* relied on testimony from Mr. Sherman as to the scope of "lateral tabs," Mr. Sherman simply rephrases Petitioner's assertion as comporting with the understanding of one of ordinary skill in the art. *Compare* Sherman Decl. ¶ 124 ("A [person of ordinary skill in the art] would understand that Michelson . . . figure 21, below, discloses two lateral tabs."), *with* Pet. 43 (stating that Michelson "discloses two lateral tabs in figure 21"); *see also* Pet. 42–44 (not citing to the Sherman Declaration on this issue). Lacking adequate explanation or support, Mr. Sherman's testimony on this issue is entitled to little weight. *See* 37 C.F.R. § 42.65(a) ("Expert testimony that does not disclose the underlying facts or data on which the opinion is based is entitled to little or no weight.").

Thus, we determine, based on the current record, that the Petition does not show a reasonable likelihood that Petitioner would prevail with respect to the contention that claim 37 would have been obvious based on Michelson. Nevertheless, we include claim 37 in the context of this asserted ground in the instituted *inter partes* review. *See SAS*, 138 S. Ct. at 1354, 1359–60; TPG 64 ("The Board will not institute on fewer than all claims or all challenges in a petition.").

c. Claim 39

We have reviewed Petitioner's contentions with respect to claim 39, which depends directly from claim 35, and we determine that the Petition provides a sufficient showing, at this stage of the proceeding, that Michelson, when modified as proposed, satisfies each limitation. *See* Pet. 46–60. Patent Owner does not present any arguments specifically addressing claim 39. *See* Prelim. Resp. 12–21. We determine, based on the current record, that the Petition shows a reasonable likelihood that Petitioner

would prevail with respect to the contention that claim 39 would have been obvious based on Michelson.

E. Asserted Obviousness of Claims 35, 37, and 39 Based on Fraser '106 and Michelson

Petitioner asserts that claims 35, 37, and 39 of the '234 patent are unpatentable under 35 U.S.C. § 103(a) based on Fraser '106 and Michelson. Pet. 4, 60–90. Patent Owner provides arguments addressing this asserted ground of unpatentability. Prelim. Resp. 21–46. We first summarize aspects of Fraser '106.

1. Fraser '106

In this ground, Petitioner relies on Fraser '106 in addition to Michelson (summarized above (*see supra* § II.D.1)). Fraser '106 describes its invention as "an implantable structure for promoting fusion of adjacent vertebral bodies." Ex. 1007, 1:14–16. Figures 1 and 2 are reproduced below:

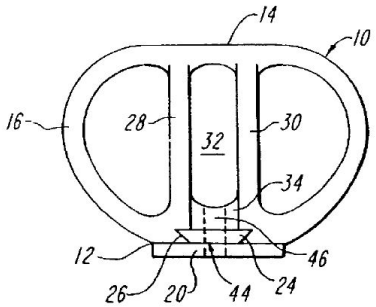

FIG. 1

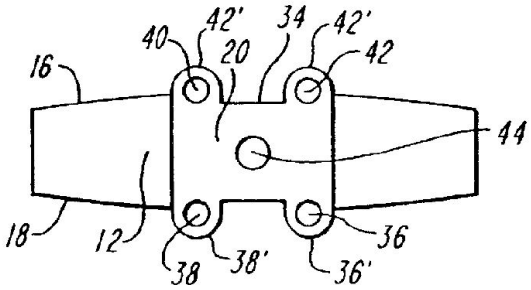

FIG. 2

Figure 1 is a "plan view of a fusion cage," and Figure 2 is a "view of the anterior face of the fusion cage" of Figure 1. Ex. 1007, 1:62–65. The depicted "cage" includes body 10, which, in turn, "includes an anterior face 12, a posterior face 14, a superior face 16, and an inferior face 18." *Id.* at 2:23–27. "The cage also includes a plate 20 that is matable with the body

10." *Id.* at 2:34–35. Fraser '106 discloses that "[a]lthough the plate 20 can be bonded firmly to the body 10 so that the plate and body cannot move with respect to each other, they can also be mated to allow movement with respect to each other." *Id.* at 2:43–46.[16] Figure 2 shows bone screw holes 36, 38, 40, and 42. *Id.* at 2:67–3:2. Figures 3 and 8 are reproduced below:

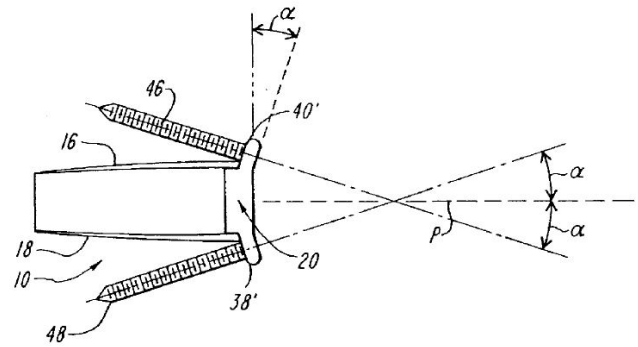

FIG. 3

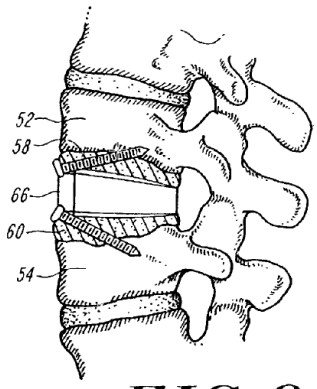

FIG. 8

Figure 3 is "a side view of the fusion cage of [Figure] 1 with bone screws" inserted and Figure 8 "depicts a portion of the spine following placement of the fusion cage" of Figure 1. Ex. 1007, 1:66–67, 2:9–10.[17] Fraser '106 discloses:

> Prior to inserting a fusion cage between vertebral bodies, the space bounded by the body 10 and transverse elements 28 and 30 (if included) can be filled with autograft or allograft bone,

---

[16] We refer to the embodiment in which plate 20 is "bonded firmly to the body 10" as the "one-piece embodiment," as does Petitioner. *See, e.g.*, Pet. 65; Prelim. Resp. 29 (referring to this as the "single-piece implant embodiment"). We refer to the embodiment in which plate 20 and body 10 are "mated to allow movement with respect to each other" as the "two-piece embodiment," as does Petitioner. *See, e.g.*, Pet. 64–65; Prelim. Resp. 36 (referring to this as the "two-piece implant embodiment").

[17] As to Figure 8, Fraser '106 explains that "portions of the vertebral bodies are shown cut-away to illustrate the penetration of the bone screws 58 and 60 into the bodies." Ex. 1007, 4:13–15.

> or demineralized bone matrix (DBM) to promote fusion. Over a period of about three months the vertebral bodies fuse.

Ex. 1007, 4:38–43.

2. Analysis

a. Independent Claim 35

For independent claim 35, Petitioner contends, in the context of this ground, that the proposed combination of Fraser '106 and Michelson satisfies each limitation. Pet. 60–77. To support its arguments, Petitioner identifies certain passages in the cited references and explains the significance of each passage with respect to the corresponding claim limitation. *Id.* Petitioner also articulates reasons to combine the relied-upon aspects of Fraser '106 and Michelson. *Id.* at 87–90. Patent Owner argues (1) that Petitioner has failed to show that Fraser '106 discloses a "base plate" under either Patent Owner's proposed construction or Petitioner's proposed construction (Prelim. Resp. 24–29), (2) that Petitioner has failed to show that Fraser '106's two-piece embodiment satisfies the "inter-fit" limitation[18] (*id.* at 29–36), (3) that Petitioner has failed to show that Fraser '106's two-piece embodiment satisfies the "adjacent to lateral extents" limitation[19] (*id.* at 37–

[18] This refers to the following requirement in claim 35: "the base plate being sized to have an inter-fit between the first and second adjacent bone bodies." Ex. 1001, 12:14–16.

[19] This refers to the following requirement in claim 35: "the base plate being . . . adjacent to lateral extents of the bone graft material such that the first and second bone bodies engage the bone graft material." Ex. 1001, 12:14–18.

39), and (4) that Petitioner has failed to show that Fraser '106 discloses the "means for permitting" limitation[20] (*id.* at 40–43).

We have reviewed Petitioner's contentions with respect to the limitations of claim 35 and, for the reasons below, we determine that the Petition shows a reasonable likelihood that Petitioner would prevail with respect to the contention that claim 35 would have been obvious based on Fraser '106 and Michelson. Pet. 60–77. We address in turn below each of Patent Owner's arguments.

(1) The "Base Plate" Limitation

Addressing the "base plate" limitation under its own proposed construction, Petitioner provides the following side-by-side comparison of annotated versions of Figure 3 of the '234 patent and Figure 8 of Fraser '106:

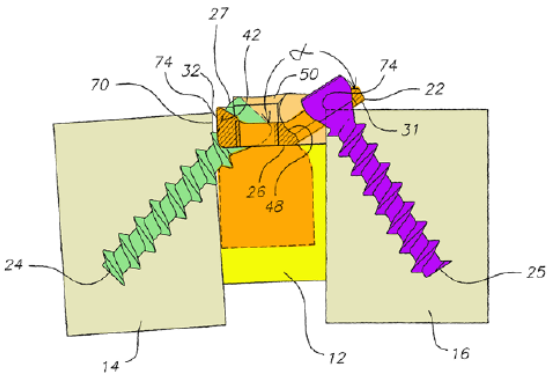

FIG. 3

'234 patent, Ex.1001, Fig.3

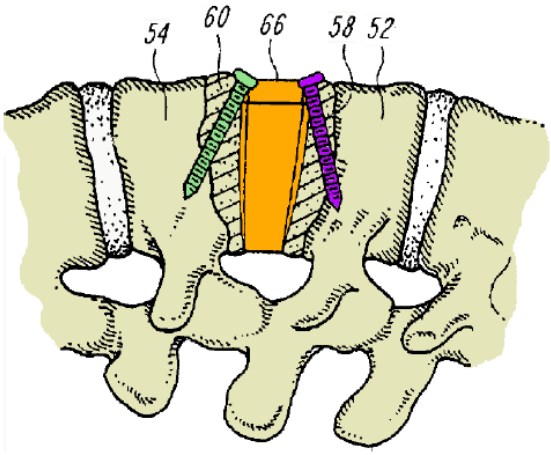

Fraser '106, Ex.1007, Fig.8

[20] This refers to the requirement in claim 35 for a "means for permitting movement of at least one of the first and second bone bodies relative to the base plate." Ex. 1001, 12:23–25.

Pet. 62. For the annotated version of Figure 3 of the '234 patent, Petitioner added (1) tan overlay to vertebral bodies 14 and 16, (2) orange overlay to base plate 20, (3) green overlay to bone screw 24, and (4) purple overlay to bone screw 25. *Id.* For the annotated version of Figure 8 of Fraser '106, Petitioner added (1) tan overlay to the vertebral bodies, (2) orange overlay to body 10/plate 20, (3) green overlay to bone screw 60, and (4) purple overlay to bone screw 58. *Id.* Referring to these annotated Figures, Petitioner states:

> [L]ike the '234 patent, Fraser '106 discloses a fixation plate 66 to stabilize adjacent vertebrae for fusion. Fraser '106 explains that "[t]he plate is configured to receive, retain and orient bone screws, thereby holding the fusion cage and adjacent vertebral bodies in a stable relationship to promote fusion." Ex.1007, 1:36–42; *see* Ex.1005, ¶171 (describing how the plate stabilizes the bones for fusion).

Pet. 61.[21] Petitioner highlights Fraser '106's disclosure of the one-piece embodiment, in which "**the plate 20 can be bonded firmly to the body 10 so that the plate and body cannot move with respect to each other**." *Id.*

---

[21] Although Petitioner initially refers to the structure overlaid in orange in the annotated version of Figure 8 of Fraser '106 as "fixation plate 66," Petitioner then refers to the same structure as "an implant with a base plate and integrated load-bearing fusion cage." Pet. 61, 63. We note that reference numeral 66 is only the "anterior face surface . . . of the fusion cage." Ex. 1007, 4:17–18. Based on the totality of the record, we view Petitioner's reference to reference numeral 66 (Pet. 61) as a typographical error. We understand Petitioner to identify the combined body 10/plate 20 as the "base plate" (as overlaid in orange in the annotated version of Figure 8 of Michelson above). This understanding is supported by other annotated Figures in the Petition. *See, e.g.*, Pet. 62 (showing an annotated version of Figure 1 of Fraser '106 with certain structure overlaid in orange), 63 (discussing "an implant with a base plate and an integrated load-bearing fusion cage (orange, above)"). Patent Owner has a similar understanding, as reflected in its arguments on this issue. *See* Prelim. Resp. 24–27.

at 63 (quoting Ex. 1007, 2:43–45, with emphasis added by Petitioner) (citing Ex. 1007, 2:34–35; Sherman Decl. ¶ 174).

Addressing the "base plate" limitation under Patent Owner's proposed construction, Petitioner provides the following annotated version of Figure 1 of Fraser '106:

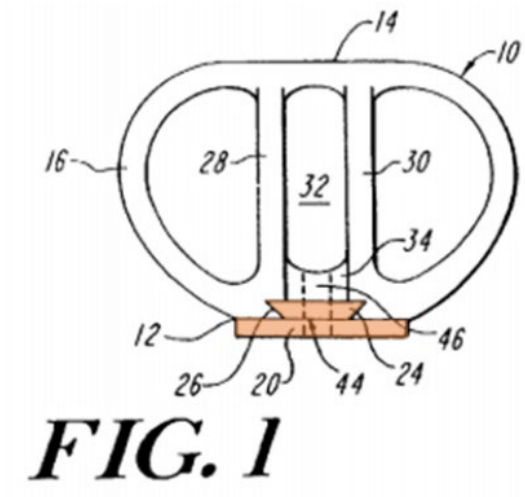

Fraser '106, Ex.1007, Fig.1

Pet. 65. In this annotated version of Figure 1 of Fraser '106, Petitioner added orange overlay to plate 20. *Id.* Petitioner highlights Fraser '106's disclosure of the two-piece embodiment, in which body 10 and plate 20 can "**be mated to allow movement with respect to each other**." *Id.* at 64 (quoting Ex. 1007, 2:43–46, with emphasis added by Petitioner). Petitioner states that base plate 20 is "used for fixation to stabilize adjacent vertebrae for fusion." *Id.* at 65 (citing Ex. 1007, 1:40–42, 2:43–45; Sherman Decl. ¶¶ 177–178).

Patent Owner presents two related arguments. First, Patent Owner argues that Petitioner has failed to show that Fraser '106 discloses a "base plate" under Petitioner's proposed construction. *See* Prelim. Resp. 24–27. Specifically, Patent Owner contends that Petitioner "tacitly, and improperly,

attempt[s] to adopt and apply a modified version of [its] proposed construction that inserts an additional qualifier—that a base plate may not be used with a '***separate***' load-bearing fusion cage." *Id.* at 25 (citing Pet. 63). According to Patent Owner, Petitioner "offer[s] no evidence or argument showing that the term 'base plate' . . . would be understood to exclude fixation plates used with separate fusion cages or spacers while including fixation structures used with integrally-formed fusion cages or spacers." *Id.* at 26. Patent Owner also argues that Petitioner "fail[s] to support [its] unstated premise that firmly bonding plate 20 and fusion cage body 10 such that they cannot move relative to each other means that these structures are now 'integrated' or integrally-formed, and no longer 'separate' or distinct elements." *Id.*

At this stage of the proceeding, Patent Owner's first argument does not identify a deficiency in Petitioner's position. As discussed above (*see supra* § II.D.2.a.1), we understand Petitioner to have implicitly included "separate" in its proposed construction. Here, Patent Owner's first argument only addresses Petitioner's proposed requirement that the "base plate" is "not used with a [separate] load-bearing fusion cage." *See* Prelim. Resp. 24–27. As discussed above, however, our preliminary construction *does not* include that additional requirement proposed by Petitioner. *See supra* § II.C.2.a. Thus, Petitioner need not show that Fraser '106 satisfies that requirement. *See Self*, 671 F.2d at 1348 (rejecting arguments "not based on limitations appearing in the claims").

Second, Patent Owner argues that Petitioner has failed to show that Fraser '106 discloses a "base plate" under Patent Owner's proposed construction. *See* Prelim. Resp. 27–29. Specifically, Patent Owner contends

that "[t]he single-piece implant structure identified by Petitioner[]—Fraser '106's plate 20 with fusion cage body 10— . . . is not a 'base plate' because Petitioner[] treat[s] the firmly bonded spacer/fusion cage body 10 as being ***indistinct*** from plate 20" rather than "distinct from a spacer" as proposed as part of Patent Owner's construction. *Id.* at 27–28 (citing Pet. 63).

At this stage of the proceeding, Patent Owner's second argument also does not identify a deficiency in Petitioner's position. As an initial matter, this argument does not address Petitioner's position; when addressing Patent Owner's proposed construction of "base plate," Petitioner relies on the two-piece embodiment in Fraser '106, not the one-piece embodiment. *See* Pet. 63–65. In addition, because our preliminary construction *does not* include the "distinct from a spacer" requirement from Patent Owner's proposed construction (*see supra* § II.C.2.b), we need not reach this *alternative* position taken by Petitioner. Pet. 63–64 (discussing the two-piece embodiment "for the sake of completeness in this petition, and to the extent that the Patent Owner argues, and the Board agrees that the claims require both a base plate and a separate spacer (i.e., a two-piece implant)").

As discussed above, Petitioner identifies body 10/plate 20 in the one-piece embodiment in Fraser '106 as a "fixation plate . . . to stabilize adjacent vertebrae for fusion" (Pet. 61)—in other words, as a "base plate" under our preliminary construction. At this stage of the proceeding, Patent Owner does not challenge this assertion by Petitioner, which we determine is supported by the record. *See, e.g.*, Ex. 1007, 1:36–42 ("The present invention improves upon known spinal fusion devices, especially those devices intended for an anterior approach to the spine. In an exemplary embodiment, a spinal fixation assembly includes a fusion cage to which a

plate is mated. The plate is configured to receive, retain and orient bone screws, thereby holding the fusion cage and adjacent vertebral bodies in a stable relationship to promote fusion."). For these reasons, at this stage of the proceeding and on the current record, we determine that Petitioner has made a sufficient showing that Fraser '106 discloses the "base plate" limitation under the preliminary construction above.

(2) The "Inter-fit" Limitation

Claim 35 recites "the base plate being sized to have an inter-fit between the first and second adjacent bone bodies." Ex. 1001, 12:14–16. In the discussion of this limitation, Petitioner provides the same annotated version of Figure 8 of Fraser '106 reproduced in the prior subsection. *Compare* Pet. 71, *with id.* at 62. Petitioner highlights Fraser '106's disclosure that "[t]he cage includes **a body 10 that approximates the shape and size of the annulus portion of a disk** which normally separates two vertebral bodies." Pet. 70 (quoting Ex. 1007, 2:21–23, with emphasis added by Petitioner) (citing Sherman Decl. ¶ 194). Petitioner also states that Fraser '106 "discloses that the shape of the implant is designed to fit in the cavity between the bones that was previously occupied by the disk" and that, "[a]s shown in Figure 8, this allows the implant to fit completely in between the first and second adjacent bone bodies without extending beyond the perimeter of the bones or covering any portion of the anterior surface of the bones." *Id.* at 70–71. Petitioner also asserts that the two-piece embodiment in Fraser '106 satisfies this limitation. *Id.* at 72–73.

Patent Owner argues that Petitioner has not shown that the two-piece embodiment from Fraser '106 satisfies the "inter-fit" limitation under Petitioner's proposed construction. Prelim. Resp. 29–36. As an initial

matter, we note that although Petitioner *states* a construction for this limitation, Petitioner did not *discuss* that proposed construction in the claim construction section of the Petition. *See* Pet. 70 (providing a construction that was allegedly "discussed above" on pages 14–20 of the Petition).

Moreover, here, Patent Owner's arguments only address why the *two-piece* embodiment of Fraser '106 allegedly does not satisfy Petitioner's construction of the "inter-fit" limitation. As discussed above (*see supra* § II.E.2.a.1), however, Petitioner only relies on that embodiment in the alternative and to the extent we construe the "base plate" limitation to include the "distinct from a spacer" requirement proposed by Patent Owner. *See* Pet. 63–65. Because our preliminary construction of the "base plate" limitation *does not* include that requirement, this argument does not identify a deficiency in Petitioner's position as to the "inter-fit" limitation. At this stage of the proceeding, Patent Owner does not challenge Petitioner's position relying on the *one-piece* embodiment of Fraser '106 as to the "inter-fit" limitation, which we determine is supported by the record. *See* Pet. 70–71. For these reasons, at this stage of the proceeding and on the current record, we determine that Petitioner has made a sufficient showing that Fraser '106 discloses the "inter-fit" limitation.

(3) The "Adjacent to Lateral Extents" Limitation

Claim 35 recites "the base plate being . . . adjacent to lateral extents of the bone graft material such that the first and second bone bodies engage the bone graft material." Ex. 1001, 12:14–18. Addressing this limitation, Petitioner highlights Fraser '106's disclosure that "the space bounded by the body 10 and transverse elements 28 and 30 (if included) can be filled with autograft or allograft bone, or demineralized bone matrix (DBM) to promote

fusion." Ex. 1007, 4:37–42, *quoted at* Pet. 71–72 (citing Sherman Decl. ¶ 197). According to Petitioner, one of ordinary skill in the art "would understand that when the Fraser '106 implant engages the surfaces of the vertebrae, the first and second bone bodies would be in direct contact with the bone graft material" and thus would *also* "understand that Fraser '106 discloses that the first and second bone bodies engage the bone graft material." Pet. 72 (citing Sherman Decl. ¶ 197).

Patent Owner argues that Petitioner has not shown that the two-piece embodiment from Fraser '106 satisfies the "adjacent to lateral extents" limitation. Prelim. Resp. 29–36. As discussed above (*see supra* § II.E.2.a.1), however, Petitioner only relies on that embodiment in the alternative and to the extent we construe the "base plate" limitation to include the "distinct from a spacer" requirement proposed by Patent Owner. *See* Pet. 63–65.

Because our preliminary construction of the "base plate" limitation *does not* include that requirement, this argument does not identify a deficiency in Petitioner's position as to the "adjacent to lateral extents" limitation. At this stage of the proceeding, Patent Owner does not challenge Petitioner's position relying on the *one-piece* embodiment of Fraser '106 as to the "adjacent to lateral extents" limitation, which we determine is supported by the record. *See* Pet. 71–72. For these reasons, at this stage of the proceeding and on the current record, we determine that Petitioner has made a sufficient showing that Fraser '106 discloses the "adjacent to lateral extents" limitation.

(4) The "Means for Permitting Movement" Limitation

Claim 35 recites a "means for permitting movement of at least one of the first and second bone bodies relative to the base plate." Ex. 1001, 12:23–25. Petitioner states that "Fraser '106 in view of Michelson . . . meets this limitation." Pet. 75. Petitioner states that "in Fraser '106, when the bones settle[,] the disclosed locking screws, *see* figures 1–3, don't allow relative motion between the screws and the base plate because the bones and screws cannot move relative to each other." *Id.* at 76. According to Petitioner, "[t]o address this issue, [one of ordinary skill in the art] would have known to modify (or replace) the locking screw holes disclosed in figure 2 with another known structure that allows bones to settle in the inferior direction (*i.e.*, in the downward vertical direction of the spine)." *Id.* (citing Sherman Decl. ¶ 208). Petitioner contends that "[o]ne such structure that permits this movement is a vertical slot" and that one of ordinary skill in the art "could modify the holes in Fraser '106 by expanding the height of the holes to create slots" as depicted in the revised and annotated version of Figure 2 of Fraser '106 reproduced below:

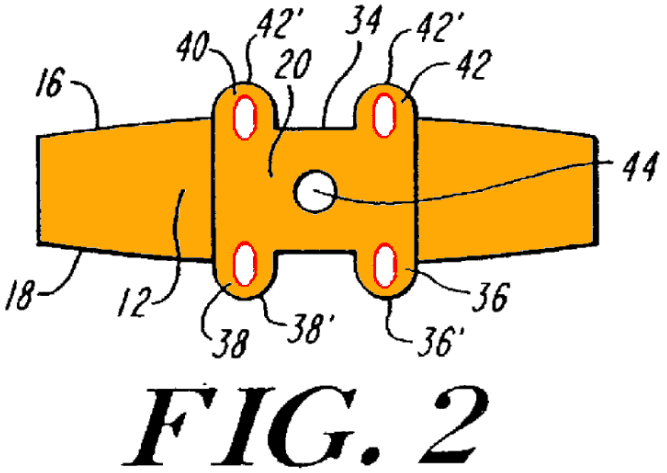

Fraser '106, Ex.1007, Fig.2 (modified with slots)

Pet. 76 (citing Sherman Decl. ¶ 208). In the revised and annotated version of Figure 2, Petitioner (1) added orange overlay to the depicted structure, (2) elongated bone screw holes 36, 38, 40, 42 to be slots, and (3) highlighted the slots in red. *Id.* Petitioner argues that one of ordinary skill in the art "would be motivated to modify (or replace) the bone screw holes in Fraser '106 with a bone screw slot because a slot prevents movement of the bone laterally (*i.e.*, side-to-side), and permits movement in the superior/inferior direction (*i.e.*, up/down the spine)." *Id.* at 77 (citing Sherman Decl. ¶ 115) (discussing Pet. 38–42).

In a separate section of the Petition, with the heading "Reasons and Motivations to Combine Fraser '106 in view of Michelson," Petitioner first argues that one of ordinary skill in the art would have considered Fraser '106 and Michelson because they are analogous art. *See* Pet. 87–89. Second, Petitioner argues that one of ordinary skill in the art "would have combined Fraser '106 and Michelson . . . because the combination merely involves the simple substitution of one known element (*i.e.*, the Fraser '106 locking screw) for another (*i.e.*, the Michelson . . . toggle screw with locking plate)." *Id.* at 89. According to Petitioner, "Fraser '106 teaches that exposed screws can cause significant harm to a patient," and one of ordinary skill in the art "would have recognized that the Michelson . . . toggle screw with locking plate was a known anti-back out device that could be substituted for the locking screws disclosed in Fraser '106." *Id.* (citing Ex. 1007, 4:16–19; Sherman Decl. ¶ 240).[22]

[22] Although Petitioner cites Exhibit 1004, based on the reference to Fraser '106, we understand Petitioner to have intended to cite Exhibit 1007.

Third, Petitioner argues that one of ordinary skill in the art "would have wanted to modify Fraser '106 with the teachings of Michelson." Pet. 89 (emphasis omitted). Specifically, Petitioner states that Michelson "discloses using a screw anti-back out system with standard bone screws to compensate for settling of the bones after implantation" and that one of ordinary skill in the art "would have recognized that using toggle screws to permit the bones to settle was advantageous, so long as there was an anti-back out mechanism." *Id.* (citing Sherman Decl. ¶¶ 241–244). According to Petitioner, one of ordinary skill in the art "would have recognized that the anti-back out plates are easy to use and implement in a variety of implant designs." *Id.* at 89–90 (citing Sherman Decl. ¶¶ 241–244). Petitioner states that "[t]he result of this simple modification to Fraser '106 would have yielded predictable and successful result—namely, a spinal implant with an anti-back out plate that can securely hold bone screws in place but still enable the bone to settle subsequent to implantation." *Id.* at 90 (citing Sherman Decl. ¶¶ 241–244).

Patent Owner argues that Petitioner has failed to show that Fraser '106 in view of Michelson satisfies the "means for permitting" limitation. *See* Prelim. Resp. 40–43. Specifically, Patent Owner first argues that both Fraser '106 and Michelson "teach away from replacing locking screws (which prevent 'back out') with non-locking screws (which can back out), as Petitioner[] propose[s], at least without some other means of preventing back out of the non-locking screws." Prelim. Resp. 41. According to Patent Owner, "Petitioner[] fail[s] to satisfy [its] burden with respect to this [limitation] because [it] fail[s] to adequately propose and describe any such

alternative means for preventing back out of the proposed non-locking screws." *Id.* at 41–42.

At this stage of the proceeding, Patent Owner's first argument does not identify a deficiency in Petitioner's position. As admitted by Patent Owner, in the separate section asserting reasons to combine Fraser '106 and Michelson (*see* Pet. 87–90), Petitioner does at least "nominally acknowledge this screw back out issue." Prelim. Resp. 42 (citing Pet. 87–90, and stating that "[o]nly later in the Petition do Petitioners even nominally acknowledge this screw back out issue"). Although this discussion by Petitioner (Pet. 87–90) is not in the section most clearly addressing the "means for permitting" limitation (i.e., Pet. 75–77), considering the Petition as a whole, we do not agree with Patent Owner that Petitioner has failed to discuss structure for preventing back out in the modified device (i.e., the "screw back out issue"). Prelim. Resp. 42.

Second, Patent Owner argues that even Petitioner's statements in the separate section addressing the reasons to combine Fraser '106 and Michelson (Pet. 87–90) "fail to adequately describe or propose what additional modifications to the Fraser '106 fixation plate would have been made to address" the "screw back out issue." Prelim. Resp. 42. According to Patent Owner, "Petitioner[] (and [its] declarant) fail to identify with particularity what anti-back out mechanism(s) described in Michelson they contend would work with the Fraser '106 locking plate 20 with its independently angled tabs with bone screw holes (or slots) through them" and thus, Petitioner "fail[s] to disclose 'with particularity' in the Petition the arguments and evidence that supports the grounds for the challenge to each claim as required by 35 U.S.C. § 312(a)(3)." *Id.* at 42–43 (citing Ex. 1007,

3:13–31, Fig. 3). Patent Owner argues that these alleged deficiencies also require "Patent Owner and the Board [to] speculate as to whether a Fraser '106 implant, modified somehow to incorporate some unspecified locking-mechanism elements from Michelson, would still satisfy other claim limitations that Petitioner[] assert[s] are satisfied by the unmodified Fraser '106 implant." *Id.* at 43.

Although Petitioner's explanation of this aspect of the proposed modification could have been more thorough, at this stage of the proceeding, Patent Owner's second argument does not identify a deficiency in Petitioner's positions. In the first reference to the relevant structure from Michelson in the explanation of this aspect of the proposed modification, Petitioner refers to "*the* Michelson . . . toggle screw and locking plate." Pet. 89 (emphasis added). With that, and considering the Petition as a whole, we understand Petitioner to refer to the only related screw and locking plate in Michelson previously discussed—i.e., screws 442 and lock 462—in the only embodiment in Michelson substantively discussed by Petitioner—i.e., the "fourth embodiment." *See* Ex. 1006, at 16–18 (discussing the "fourth embodiment"); Pet. 22 (stating that the first asserted ground "relied on Michelson['s] fourth embodiment"). In the discussion of the "means for permitting" limitation in the context of the *first* asserted ground, Petitioner discusses these structures (*see, e.g.*, Pet. 40 (first paragraph)), and then, in the discussion of the "means for permitting" limitation in the context of *this* asserted ground, Petitioner *refers back* to the prior discussion. *See* Pet. 77 ("A POSITA would be motivated to modify or replace holes with slots for the same reasons as discussed above in Section VIII.A.8 [(i.e., pages 38–42 of the Petition)]."). Although Petitioner could have been clearer on this

issue, we do not agree with Patent Owner that Petitioner failed to satisfy the "particularity" requirement of 35 U.S.C. § 312(a)(3). We encourage the parties to develop these issues as necessary during trial.

For these reasons, at this stage of the proceeding and on the current record, we determine that Petitioner has made a sufficient showing that Fraser '106 in view of Michelson satisfies the "means for permitting" limitation.

(5) The Remaining Aspects of Petitioner's Contentions

Patent Owner does not offer any arguments specifically addressing the remaining limitations of claim 35. *See* Prelim. Resp. 21–43. We have reviewed Petitioner's contentions with respect to the remaining limitations of claim 35, and determine that the Petition provides a sufficient showing, at this stage of the proceeding, that the combination of Fraser '106 and Michelson satisfies each limitation. *See* Pet. 60–77. For the reasons above, we determine, based on the current record, that the Petition shows a reasonable likelihood that Petitioner would prevail with respect to the contention that claim 35 would have been obvious based on Fraser '106 and Michelson.

b. Claim 37

For dependent claim 37, Petitioner contends that Fraser '106 satisfies each limitation. Pet. 77–80. Patent Owner argues that Petitioner has failed to show that Fraser '106 discloses the "lateral tabs" limitation. *See* Prelim. Resp. 43–46. For the reasons below, we determine that the Petition does not show a reasonable likelihood that Petitioner would prevail with respect to the contention that claim 37 would have been obvious based on Fraser '106 and Michelson.

Addressing the "lateral tabs" limitation, Petitioner provides the following annotated version of Figure 1 of Fraser '106:

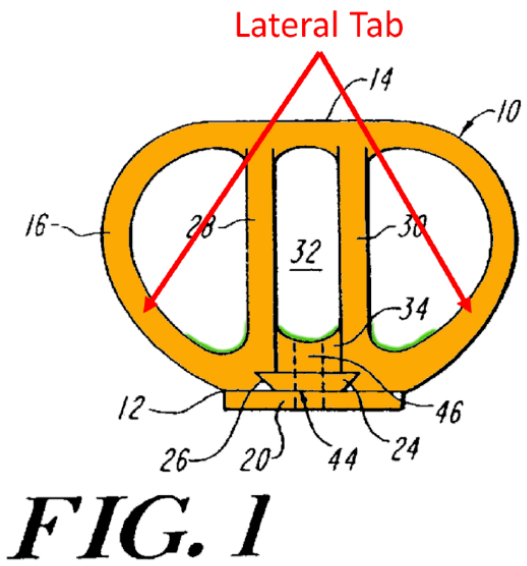

Fraser '106, Ex.1007, Fig.1

Pet. 78–79. For the annotated version of Figure 1, Petitioner added (1) orange overlay to body 10/plate 20, (2) curved green lines to portions of the three interior spaces within body 10, and (3) text with red arrows identifying two portions of body 10 as "Lateral Tab[s]." *Id.* Referring to this annotated Figure, Petitioner states that "Fraser '106 discloses two lateral tabs that extend from opposite ends of the bottom surface (green) of the base plate." *Id.* at 78.

Patent Owner argues that Petitioner has failed to show that Fraser '106 discloses the "lateral tabs" limitation. *See* Prelim. Resp. 43–46. Patent Owner argues that, as with claim 37 in the context of the prior ground, Petitioner again "improperly conflate[s] a 'tab'—*i.e.*, a projection, flap, or short strip attached to an object—with the side(s) of an object." *Id.* at 44. According to Patent Owner, "[t]he structures on fusion cage body 10 identified by Petitioner[] . . . in Fraser '106 Figure 1 are not 'projections' but

rather are sides that connect the front portion of the body 10 to the rear portion of the body in a contiguous manner." *Id.*[23]

At this stage of the proceeding and on the current record, we agree with Patent Owner that Petitioner has not made an adequate showing that Fraser '106 discloses the "lateral tabs" limitation. *See* Prelim. Resp. 43, 46. Similar to the situation in the context of the prior ground, Petitioner identifies portions of body 10 in Fraser '106 as the "two lateral tabs" recited in claim 37, but does not adequately explain *why* those portions are "tabs" under a proper understanding of that term. Again, Patent Owner's asserted understanding of a "tab"—although unsupported at this stage—is consistent with the "tabs" depicted in Figure 2 of the '234 patent and the related description. *See* Ex. 1001, 6:33–38.

Moreover, also similar to the situation in the context of the prior ground, even if Petitioner *had* relied on testimony from Mr. Sherman as to the scope of "lateral tabs," Mr. Sherman again simply rephrases Petitioner's assertion as comporting with the understanding of one of ordinary skill in the art. *Compare* Sherman Decl. ¶¶ 214–215, *with* Pet. 78–79; *see also* Pet. 78–79 (not citing to the Sherman Declaration on this issue). Lacking adequate explanation or support, Mr. Sherman's testimony on this issue is entitled to little weight. *See* 37 C.F.R. § 42.65(a).

---

[23] Patent Owner presents arguments that the "two-piece implant" embodiment of Fraser '106 also does not include "lateral tabs." Prelim. Resp. 45–46. But as acknowledged by Patent Owner, Petitioner does not take the contrary position in the Petition. *See id.* at 45 (stating that Petitioner "do[es] not even bother to attempt to argue that the base plate in this embodiment (*i.e.*, plate 20 alone) has two lateral tabs."). Thus, we need not address this argument by Patent Owner.

Thus, we determine, based on the current record, that the Petition does not show a reasonable likelihood that Petitioner would prevail with respect to the contention that claim 37 would have been obvious based on Fraser ’106 and Michelson. Nevertheless, we include claim 37 in the context of this asserted ground in the instituted *inter partes* review. *See SAS*, 138 S. Ct. at 1354, 1359–60; TPG 64 (“The Board will not institute on fewer than all claims or all challenges in a petition.”).

c. Claim 39

We have reviewed Petitioner’s contentions with respect to claim 39, which depends directly from claim 35, and we determine that the Petition provides a sufficient showing, at this stage of the proceeding, that the combination of Fraser ’106 and Michelson satisfies each limitation. *See* Pet. 80–87. Patent Owner does not present any arguments specifically addressing claim 39. *See* Prelim. Resp. 21–46. We determine, based on the current record, that the Petition shows a reasonable likelihood that Petitioner would prevail with respect to the contention that claim 39 would have been obvious based on Fraser ’106 and Michelson.

III. CONCLUSION

For the reasons above, we determine that the Petition shows a reasonable likelihood that Petitioner would prevail with respect to at least one of challenged claims 35, 37, and 39 of the ’234 patent.

At this stage of the proceeding, no final determination has yet been made with regard to the patentability of any of the challenged claims or any underlying factual or legal issues, including the construction of claim terms.

The final determination will be based on the record as developed during the *inter partes* review.[24]

IV. ORDER

For the reasons above, it is:

ORDERED that, pursuant to 35 U.S.C. § 314(a), an *inter partes* review is hereby instituted as to claims 35, 37, and 39 of the ’234 patent on all asserted grounds and

FURTHER ORDERED that pursuant to 35 U.S.C. § 314(c) and 37 C.F.R. § 42.4, *inter partes* review shall commence on the entry date of this Decision, with notice hereby given of the institution of a trial.

---

[24] As highlighted in the accompanying Scheduling Order, “Patent Owner is cautioned that any arguments not raised in the response may be deemed waived.” Paper 25, at 8 (emphasis omitted); *see also In re Nuvasive, Inc*., 842 F.3d 1376, 1379–82 (Fed. Cir. 2016) (holding that a patent owner waived an argument addressed in a preliminary response by not raising the same argument in the patent owner response).

FOR PETITIONER:

Dion M. Bregman
Jason C. White
Scott D. Sherwin
James J. Kritsas
MORGAN, LEWIS & BOCKIUS LLP
dion.bregman@morganlewis.com
jason.white@morganlewis.com
scott.sherwin@morganlewis.com
james.kritsas@morganlewis.com
Medacta-IPRs@morganlewis.com

Jeffrey N. Costakos
Matthew W. Peters
FOLEY & LARDNER LLP
jcostakos@foley.com
mpeters@foley.com

Timothy Devlin
Stephanie Berger
DEVLIN LAW FIRM LLC
TD-PTAB@devlinlawfirm.com
sberger@devlinlawfirm.com

FOR PATENT OWNER:

Erik B. Milch
Frank Pietrantonio
Jennifer Volk-Fortier
Joseph Van Tassel
Dustin M. Knight
COOLEY LLP

emilch@cooley.com
fpietrantonio@cooley.com
jvolkfortier@cooley.com
jvantassel@cooley.com
dknight@cooley.com
RSB-Spine-IPR@cooley.com