UNITED STATES PATENT AND TRADEMARK OFFICE

BEFORE THE PATENT TRIAL AND APPEAL BOARD

GLOBUS MEDICAL, INC.,
Petitioner

v.

MOSKOWITZ FAMILY LLC,
Patent Owner

Case No.: IPR2020-01304
U.S. Patent No. 10,307,268
Issued: June 4, 2019
Application No: 15/976,340
Filed: May 10, 2018

PETITION FOR *INTER PARTES* REVIEW OF U.S. PATENT NO. 10,307,268 PURSUANT TO 35 U.S.C. §§ 311–319 AND 37 C.F.R. § 42

TABLE OF CONTENTS

TABLE OF AUTHORITIES

Cases

Statutes

Other Authorities

Regulations

EXHIBITS

Exhibit #	*Description*
1001	U.S. Patent No. 10,307,268
1002	Prosecution history of U.S. Patent No. 10,307,268
1003	Declaration of Jorge A. Ochoa, Ph.D., P.E.
1004	Curriculum Vitae of Jorge A. Ochoa, Ph.D., P.E.
1005	U.S. Patent Publication No. 2005/0177236 to Mathieu et al.
1006	Auguste, KI, M.D., Chin, C, M.D., Acosta, FL, M.D., Ames, CP, M.D. Expandable cylindrical cages in the cervical spine: a review of 22 cases. J. Neurosurg Spine 4:285-291, 2006
1007	Boakye, M, Mummaneni, P, Rodts, GW, Haid, RW. The Poly-ether-ether-ketone (PEEK) Spacer. Thieme Medical Publishers, Inc., 2005
1008	Cheung KMC, Leong, JCY. "Spinal Instrumentation Overview in Lumbar Degenerative Disorders: Cages", Chapter 26 in The Lumbar Spine, 3rd Edition, Herkowitz et al. editors, 2004, Lippincott Williams & Wilkins, Philadelphia.
1009	Centinel Spine. The Gold Standard in Integrated Interbody Technologies, Centinelspine.com. © 2020 Centinel Spine, LLC
1010	Dickman, CA, M.D. Internal Fixation and Fusion of the Lumbar Spine Using Threaded Interbody Cages. Div. of Neurological Surgery, Barrow Neurological Institute, Mercy Healthcare Arizona, 1997
1011	Dryer, RF. Affinity Anterior Cervical Cage System. Thieme, Spinal Instrumentation, Surgical Techniques. 2005
1012	Folman, Y, Lee, S-H, Silvera, JR, Gepstein, R. Posterior Lumbar Interbody Fusion for Degenerative Disc Disease Using a Minimally Invasive B-Twin Expandable Spinal Spacer. A Multicenter Study. J. of Spinal Disorders & Techniques, Vo. 16, No. 5, pp. 455-460. 2003
1013	Guyer, RD, Ohnmeiss, DD. Degenerative Disc Disease: Fusion Cages and Dowels. The Lumbar Spine, Third Edition, Chapter 35, Degenerative Disc Disease. 2004
1014	Holte, DC, O'Brien, JP, Renton, P. Anterior lumbar fusion using a hybrid interbody graft. A preliminary radiographic report. Eur Spin J (1994) 3:32-28
1015	Lane, JD, Jr. M.D., F.A.C.S., Moore, ES, M.D.. Transperitoneal Approach to the Intervertebral Disc in the Lumbar Area. Annals of Surgery, Vol. 127, Number 3, March 1948

Exhibit #	*Description*
1016	Michelson, GK, Griffith, SL. BAK/C Interbody Fusion System: A Threaded Cylindrical Cage for Cervical Fusion. Thieme, Spinal Instrumentation, Surgical Techniques. 2005.
1017	Prpa, B, Whitfield, MD, Lieberman, IH. Lumbar Interbody Cages. Spine Surgery, Vol. 1, Second Ed., Techniques, Complication Avoidance, and Management. 2005.
1018	Ryu, SI, Kim, DH. Cervical Carbon Fiber Interbody Fusion Cage: Bengal System. Thieme, Spinal Instrumentation Surgical Techniques, Chapter 34. 2005
1019	Schimmel, JJP, MSC, Poeschmann, MS, M.D., Horsting, PP, M.D., Schönfeld, DHW, M.D., van Limbeek, J, M.D., Ph.D., Pavlov, PW, M.D., Ph.D. PEEK Cages in Lumbar Fusion. Mid-term Clinical Outcome and Radiologic Fusion. Clin, Spine Surg. Vol. 29, Number 5, June 2016
1020	Technique Guide: SynFix-LR. Implant and instrumentation for standalone anterior lumbar interbody fusion (ALIF). © 2006 Synthes
1021	SYNFIX® EVOLUTION System https://www.jnjmedicaldevices.com/en-US/product/synfixr-evolution-system, accessed June 5, 2020.
1022	K053508, 510 (k) Summary: SynFix-LR, Synthes Spine. 2/13/2006
1023	Wagner, PC, M.S., D.V.M., Bagby, GW, M.S., Grant, BD, D.V.M., M.S., Gallina, A, D.V.M., Ph.D., Ratzlaff, M., D.V.M., Ph.D., Sande, Ron, D.V.M., Ph.D. Surgical Stabilization of the Equine Cervical Spine. Am. Col. Of Veterinary Surgery. 1979.
1024	Weiner, BK., M.D., Fraser, RD., M.D., F.R.A.C.S. SPINE Vol. 23, Number 5, pp. 634-640. 1998
1025	Wilke, HJ, Kettler, A., Claes, L. Primary stabilizing effect of interbody fusion devices for the cervical spine: an in vitro comparison between three different cage types and bone cement. Eur. Spine J. (2000) 9:410-416
1026	Wiseman, DB, Shaffrey, CI, Lanzino, G. Posterior Lumbar Interbody Fusion. Spine Surgery, Vol. One, Second Ed. Techniques, Complication Avoidance, and Management, Chapter 39. 2005
1027	Intentionally Left Blank
1028	Invalidity Claim Chart regarding U.S. Patent No. 10,307,268
1029	Intentionally Left Blank
1030	U.S. Patent Application Publication No. 2006/0253201 to McLuen

Exhibit #	*Description*
1031	U.S. Patent No. 5,658,335 to Allen
1032	U.S. Patent Application Publication No. 2002/0143399 to Sutcliffe
1033	Korean Patent Publication No. 20-0290058 to Chung and Certified English Translation
1034	Moskowitz Family LLC Disclosure of Infringement Contentions
1035	Order Granting Defendant Globus Medical's Motion to Transfer Venue Under 28 U.S.C. § 1404(a)
1036	Lex Machine Report

I. INTRODUCTION

Globus Medical, Inc. ("Globus" or "Petitioner") petitions for *inter partes* review ("IPR") of claims 1, 3, 5, 7-11, and 21-26 (the "Challenged Claims") of U.S. Patent No. 10,307,268, titled "Intervertebral Expandable Implant" ("the '268 patent"), issued to Ahmnon D. Moskowitz, et al. and assigned to Moskowitz Family LLC ("Moskowitz") according to the USPTO records. The '268 patent is attached as EX1001.

For the reasons set forth herein, Petitioner seeks a final written decision that the Challenged Claims of the '268 patent are unpatentable as obvious pursuant to 35 U.S.C. § 103.

II. MANDATORY NOTICES - 37 C.F.R § 42.8

A. Real Party in Interest (37 C.F.R. § 42.8(b)(1))

Globus Medical, Inc. is the real party-in-interest. No other party had access to this Petition and no other party had any control over, or contributed to any funding of, the preparation or filing of this Petition.

B. Related Matters (37 C.F.R. § 42.8(b)(2))

Petitioner is unaware of any disclaimers or reexamination certificates of the '268 patent.

The '268 patent was the subject of the civil action known as *Moskowitz Family LLC v. Globus Medical Inc.*, U.S. District Court for the Western District of Texas,

civil action no. 6:19-cv-672, filed November 20, 2019 ("the Original Litigation"). On July 2, 2020, Judge Alan Albright granted Petitioner's motion for transfer to the Eastern District of Pennsylvania ("EDPA"). EX1035. The Original Litigation formally transferred to the EDPA on July 6, 2020 and is docketed as *Moskowitz Family LLC v. Globus Medical Inc.*, U.S. District Court for the EDPA, civil action no. 2:20-cv-03271 ("Pending Litigation").

Petitioner is also concurrently filing IPR Petitions for the following patents: U.S. Patent No. 10,478,319 ("the '319 patent"); U.S. Patent No. 8,353,913 ("the '913 patent"); U.S. Patent No. 9,889,022 ("the '022 patent"). The '319, '913 and '022 patents are related to the '268 patent through continuation practice. Petitioner understands that the '268 patent, the '319 patent, the '913 patent and the '022 patent are all commonly owned by Moskowitz.

Petitioner is also concurrently filing IPR Petitions for U.S. Patent Nos. 10,251,643 ("the '643 patent") and 10,028,740 ("the '740 patent"). The '643 and '740 patents, although not directly related to the '268 patent, disclose similar subject matter and claim priority in a common provisional patent application No. 60/670,231. Petitioner understands that the '643 and '740 patents are likewise commonly owned by Moskowitz.

Petitioner is also concurrently filing a first IPR petition for the '268 patent to address the Challenged Claims. As explained in the first petition (ranked first by the

Petitioner for review by the Board), to the extent the Board declines to exercise its discretion under 35 U.S.C. § 325(d) and institutes this petition (IPR2020-01303), Petitioner does not seek institution of this second petition (IPR2020-01304). However, if the Board exercises its discretion to deny institution of the first petition under 35 U.S.C. § 325(d) or on the merits, then Petitioner seeks institution of this second petition.[1]

C. Designation of Lead and Backup Counsel (37 C.F.R.§ 42.8(b)(3))

Lead Counsel	Backup Counsel
George D. Moustakas (Reg. No. 44,425) HARNESS, DICKEY & PIERCE, P.L.C. 5445 Corporate Dr., Suite 200 Troy, MI 48098 248-641-1600 (telephone) 248-641-0270 (facsimile) gdmoustakas@hdp.com	David P. Utykanski (Reg. No. 39,052) HARNESS, DICKEY & PIERCE, P.L.C. 5445 Corporate Dr., Suite 200 Troy, MI 48098 248-641-1600 (telephone) 248-641-0270 (facsimile) dutykanski@hdp.com

A Power of Attorney (37 C.F.R. § 42.10(b)) is filed concurrently with this Petition.

D. Notice of Service (37 C.F.R. § 42.8(b)(4))

Please direct all correspondence to lead counsel at the above address. Petitioner consents to email service at the above-referenced email addresses.

[1] The Board should not exercise its discretion under 35 U.S.C. § 314(a) based on at least the same basis and otherwise under the factors set forth in *General Plastic Co., Ltd. v. Canon Kabushiki Kaisha*, Case IPR2016-01357 (PTAB Sept. 6, 2017) (Paper 19). Petitioner addresses § 314(a) in section XI.

III. PAYMENT OF FEES – 37 C.F.R. § 42.103

Petitioner authorizes the Office to charge Deposit Account No. 08-0750 for the petition fee set in 37 C.F.R. § 42.15(a). The Office is authorized to charge any fee deficiency, or credit any overpayment, to Deposit Acct. No. 08-0750.

IV. REQUIREMENTS FOR IPR UNDER 37 C.F.R. § 42.104

A. Grounds for Standing (37 C.F.R. § 42.104(a))

Petitioner certifies that the '268 patent is available for IPR and that Petitioner is not barred or estopped from requesting an IPR. Petitioner notes that service of the Summons and Complaint in the Original Litigation occurred on November 21, 2019.

B. Challenge Under 37 C.F.R. § 42.104(b) and Relief Requested

Petitioner requests an IPR of the Challenged Claims on the following grounds:

Ground	Challenged Claims	Asserted Prior Art	Statutory Grounds
1	1, 3, 5, 7-10	Korean Patent KR 20-0290058 to Chung et al. ("Chung") (EX1033) in view of U.S. Patent Application Publication No. 2006/0253201 to McLuen ("McLuen") (EX1030) and in further view of U.S. Patent No. 5,658,335 to Allen ("Allen") (EX1031)	35 U.S.C. § 103(a)
2	11 and 21-26	Korean Patent KR 20-0290058 to Chung et al. ("Chung") (EX1033) in view of U.S. Patent Application Publication	35 U.S.C. § 103(a)

Ground	Challenged Claims	Asserted Prior Art	Statutory Grounds
		No. 2006/0253201 to McLuen ("McLuen") (EX1030) and in further view of U.S. Patent No. 5,658,335 to Allen ("Allen") (EX1031) in further view of U.S. Patent Application Publication No. 2002/0143399 to Sutcliffe ("Sutcliffe") (EX1032)	

Based on the foregoing grounds, and as supported by the declaration of Dr. Jorge Ochoa EX1003 (as detailed in Sections X and XI), Petitioner seeks a final written decision that the Challenged Claims are unpatentable as obvious under 35 U.S.C. § 103.

V. SUMMARY OF THE '268 PATENT (EX1001)

The '268 patent issued on June 4, 2019 from an application filed on May 10, 2018. The '268 patent is a continuation of U.S. Application Serial No. 15/894,471 filed on February 12, 2018, which is a continuation of U.S. Patent No. 13/210,157 filed on August 15, 2011, now U.S. Patent No. 9,889,022, which is a continuation of U.S. Application Serial No. 13/084,543 filed on April 11, 2011, now U.S. Patent No. 8,353,913, and a continuation of U.S. Application Serial No. 13/108,982 filed on May 16, 2011, now U.S. Patent No. 9,005,293. Application No. 13/084,543 is a continuation of U.S. Application Serial No. 11/842,855, filed August 21, 2007, now

U.S. Patent No. 7,942,903. Application No. 13/108,982 is a continuation of U.S. Application Serial No. 11/842,855, which is a continuation-in-part of U.S. Application Serial No. 11/536,815 filed September 29, 2006 issued as U.S. Patent No. 7,846,188, which is a continuation-in-part of U.S. Application Serial No. 11/208,644 filed August 23, 2005, issued as U.S. Patent No. 7,704,279. The application for the '268 patent claims priority to provisional application No. 60/670,231 filed April 12, 2005.[2] EX1001.

A. The '268 Patent Specification and Claims

The '268 patent is generally directed to intervertebral expandable implants and is most easily characterized for purposes of this petition by referencing FIGs. 1B and 1D:

[2] Patentee the Pending Litigation de-designated the Disclosure of Infringement Contentions. In the disclosure the patentee confirms "[t]he earliest date of invention for each asserted claim of the '268 patent is July 31, 2007." EX1034, P. 10, II.E. Petitioner relies on this admission.

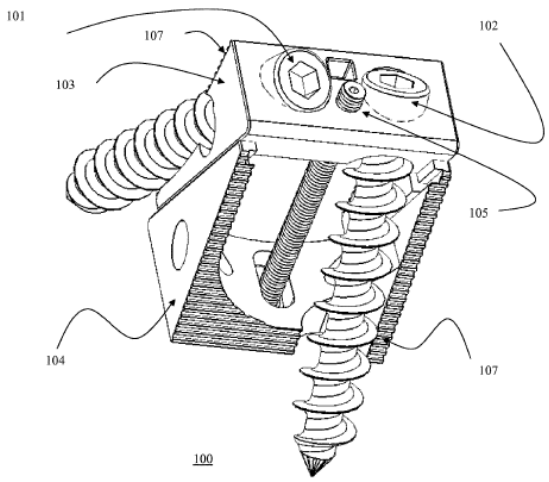

Fig. 1B

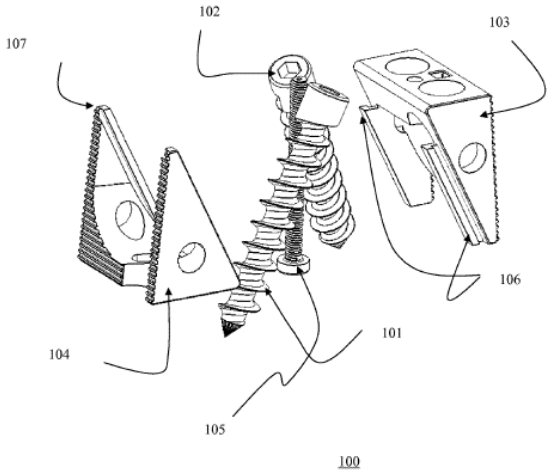

Fig. 1D

EX1001 at FIGs. 1B and 1D.

In view of FIG 1B and 1D, the '268 patent states:

> The expandable box 100 consists of top and bottom triangular sliding bases 103, 104 (FIGS. 1-D). The superior and inferior segments of the height/depth adjusting screw 105 are integrated and connected to the two separate top and bottom triangular bases 103, 104, respectively. By turning this adjusting screw 105 back and forth i.e. clock-wise, and counter clockwise, the sliding rails 106 of the top triangular base 103 (FIG. 1D) slide up and down the rail inserts 107 on the bottom triangular base 104 (FIG. 1D). This action will simultaneously alter the intervertebral height and depth of the screw box 100 allowing individualized custom fitting of the screw box 100 conforming to the dimensions of the disc space.

EX1001 at 7:52-64.

The '268 patent also discloses a tool for positioning and expanding an intervertebral expandable implant and is most easily characterized for purposes of this petition by referencing FIGs. 5A and C:

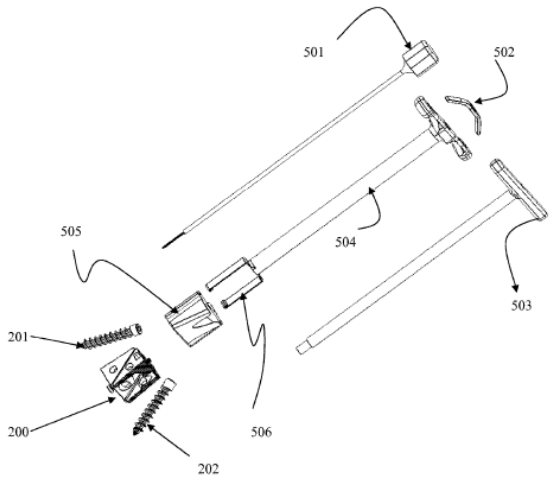

Fig. 5C

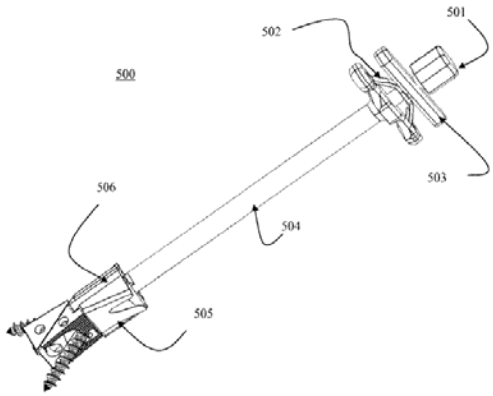

Fig. 5A

EX1001 at FIGs. 5A and 5C.

In view of Fig 5A and C, the '268 patent states:

> The key components of this device include an Allen key 501, a spring 502, a handle 503, a griper 504 and a screw guide 505. The Allen key 501 when inserted in the insertion 514 and turned, turns the screw adjuster (FIG. 5C) which in turn regulates top and bottom triangular screw box base sliding, and hence box 200 width and depth. The griper 504 has griper prongs 506 which insert into grooves of the screw guide 505 and the screw box 200 (FIGS. 5A-D) thus perfectly aligning them.

EX1001 at 8:63-9:4.

B. <u>The '268 Patent Prosecution History (EX1002)</u>

On May 10, 2018, the Applicant filed application serial no 15/976,340, that eventually issued as the '268 patent. EX1002 at 365-433.

On May 14, 2018, the Applicant filed a preliminary amendment cancelling original claims 1-10 and adding new claims 11-36 directed to an intervertebral

expandable implant. EX1002 at 347-355.

On October 18, 2018, the Examiner issued a Non-Final Office Action rejecting claims 11, 13-18, 20-22 and 24-27 under 35 U.S.C. § 102(a) as anticipated by Baynham et al. (U.S. Pub. No. 2007/0270968), rejecting claim 19 under 35 U.S.C. § 103(a) as obvious over Baynham in view of the knowledge of one of ordinary skill in the art, and rejecting claims 12, 23 and 28-36 under 35 U.S.C. § 103(a) as obvious over Baynham in view of Euros (FR 2727003). EX1002 at 184-188. The Examiner concurrently issued a non-statutory double-patent rejection for all pending claims based on claims 1-18 of U.S. Patent No. 7,942,903. *Id.* at 188-190.

On October 23, 2018, the Applicant filed a Terminal Disclaimer to obviate the double-patenting rejection. EX1002 at 174-175. With respect to the prior art rejections, rather than amending rejected claims 11-36, the Applicant cancelled claims 16-18, 29 and 33-35 and argued that rejection of the remaining claims was ill-founded based on the Baynham reference failing to disclose certain claim limitations. *Id.* at 156-173. Additionally, the Applicant added new claims 37-47 noting that claims 37-39 carried the same claim limitations that served as the basis for arguing over the Baynham reference. *Id.* Of import to the analysis under 35 U.S.C. § 325(d), is the fact that *all* rejected claims and new claims 37-39 were directed to an **intervertebral expandable implant**. Conversely, new claims 40-47 were directed to a **tool** for positioning and expanding an intervertebral expandable

implant. *Id.* at 160-173.

On November 2, 2018, the Applicant participated in a telephone conference with the Examiner. The examiner noted in the subsequent interview summary that "[s]everal features discussed were viewed by Examiner as disclosed or obvious … Applicant will consider amending the claims to distinguish over the prior art." EX1002 at 148.

On January 5, 2019, the Examiner issued a Final Office Action in which the non-cancelled original claims were rejected on the *identical grounds* detailed in the non-final office action and new claims 37-39, were rejected under 35 U.S.C. § 103(a) as obvious over Baynham in view of the knowledge of one of ordinary skill in the art. EX1002, at 110-112. All rejected claims were directed to an **intervertebral expandable implant**. Remaining new claims 40-47 directed to a **tool** were objected to as being dependent upon a rejected base claim, but would be allowable if rewritten in independent form to include all of the limitations of the base claim and any intervening claims. *Id.* at 113.

On January 5, 2019 (the day on which the Final Office Action issued), the Applicant filed its Response After Final cancelling several claims and amending claims 40, 44, and 46 into independent form. EX1002, at 122-134. The Applicant noted, "all pending claims are either the same claims that were identified as allowable or depend from one of the allowable base claims." *Id.* at 135.

On March 3, 2019, the Examiner issued a Notice of Allowance for the amended claims. EX1002 at 91-92.

Summarizing the file history, the Examiner rejected all implant claims and the applicant never sought amendment to overcome the objection. Rather, the applicant added new tool claims which were objected to and rewritten in independent form to gain allowance.

In view of the facts above, the analysis under the *Becton, Dickinson* factors is clear. During prosecution, the Baynham reference was used by the examiner *solely* to reject the intervertebral expandable implant claims. No prior art reference, including Baynham, was ever characterized or used by the examiner to reject the tool claims. Objected to new claims 40-47, directed to a **tool,** were rewritten in independent form to gain allowance.

As noted below in sections X. and XI., Chung is used in this petition to address the subject matter of an intervertebral expandable implant. Chung and the remaining prior art references, including the prior art reference (Allen) directed to a tool, were not of record. The Allen reference is used herein to address the Challenged Claims directed that are directed to a tool for positioning and expanding an intervertebral expandable implant. The prior art combination of Allen directed to a tool and Chung directed to an intervertebral expandable implant were never of record and NO prior art was ever cited or characterized by the examiner for the claimed subject matter of

a tool.

By definition under the *Becton, Dickinson* factors, there are significant and material differences between the prior art and arguments asserted in this petition and the prior art and arguments asserted in prosecution. Under factors (a), (b) and (d) of the *Becton, Dickinson* factors, the same or substantially the same art was previously NOT presented to the Patent Office. The Petitioner here relies on Allen for the claimed subject matter directed to a tool and Chung for the claimed subject matter directed to an intervertebral expandable implant. The factors weigh heavily in favor of institution as the same or substantially the same art and arguments were not presented or relied on by the examiner during prosecution. The remaining factors are not addressed as the first factors are dispositive on subject.

VI. CLAIM CONSTRUCTION

In an IPR proceeding, a claim of a patent "shall be construed using the same claim construction standard that would be used to construe the claim in a civil action under 35 U.S.C. § 282(b), including construing the claim in accordance with the ordinary and customary meaning of such claim as understood by one of ordinary skill in the art and the prosecution history pertaining to the patent."[3]

Petitioner submits that the claim terms require no express construction and

[3] 37 C.F.R. § 42.100(b); *see Phillips v. AWH Corp.*, 415 F.3d 1303, 1312-13 (Fed. Cir. 2005) (en banc).

that they should be given their ordinary and customary meaning. This is true for all limitations, except Petitioner submits that the following claim terms should be construed in accordance with the intrinsic evidence and Petitioner offered the same constructions in the Pending Litigation:[4]

Claim Term	**Globus's Construction**
"first implant structure"/ "second implant structure"	"a [first/second] implant structure comprising the [first/second] vertebral body engagement surface"
"adjusting screw positioned in the adjusting screw hole"	"adjusting screw located on the spacer, as opposed to on the tool"
"an adjusting tool passage extending through the first tool from the first proximal end to the first distal end"	"an adjusting tool passage that extends through the entirety of the first tool from the first proximal end to the first distal end"
"an indentation adjacent to the screw hole"	"an indentation different from the first and second tool engagement indentations"

Petitioner, however, expressly reserves its right to argue a different claim construction in a different forum for any term in the '268 patent, as appropriate in that proceeding.

[4] Moskowitz asserted in the Pending Litigation that all claim terms take their plain and ordinary meaning. Under the proposed constructions or the plain and ordinary meaning, application of the cited art herein leads to the same conclusion that the Challenged Claims are unpatentable.

VII. THE LEVEL OF SKILL IN THE ART

As established in the Declaration of Dr. Ochoa, (EX1003, at ¶¶ 26-30; EX1004) a person having ordinary skill in the art (PHOSITA) of the '268 patent would have a Bachelor's or equivalent degree in Mechanical Engineering or a related discipline (e.g. biomechanics or biomedical engineering), and at least five years of experience. The experience would consist of a) designing, developing, evaluating and/or using prosthetic devices, b) anatomy, physiology and biology of soft and calcified tissues including bone healing and fusion, and c) biomechanical and functional loading of orthopedic implants. Alternatively, a PHOSITA could have an advanced degree in the technical disciplines noted above, or a Doctor of Medicine, and at least two years of experience in the subject areas provided above.

VIII. THE PRIOR ART RELIED UPON IN THIS PETITION

A. Chung (EX1033)

Chung, entitled "A Lumbar Holder," issued September 10, 2002. Chung is prior art to the '268 patent under 35 U.S.C. § 102(b) (Pre-AIA). Chung was not considered by the Examiner during the prosecution.

Chung discloses an intervertebral expandable implant, as best characterized for purposes of this petition by FIGs. 1-4:

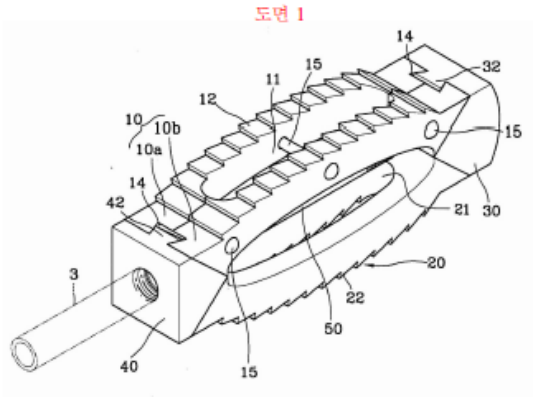

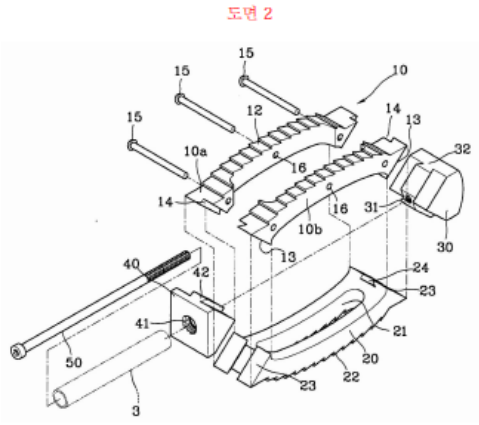

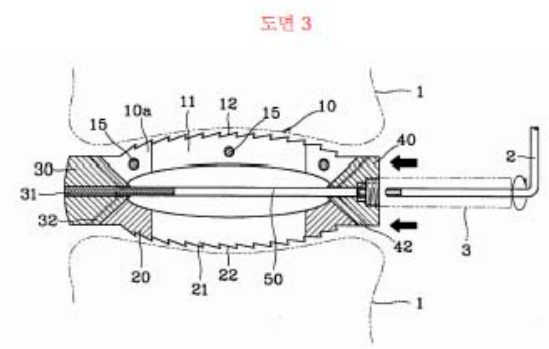

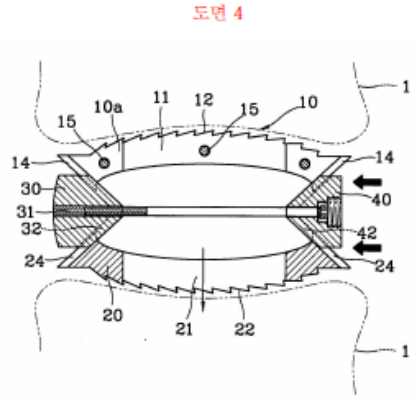

EX1033, at FIGs. 1-4.

Chung discloses that:

> As illustrated in Figure 1 and Figure 2, "the lumbar holder in accordance with the present design is composed of the holder body (10) that comes into contact with the neighboring back bones (1) into which the aforementioned lumbar holder is to be inserted and the main body of the opposing holder (20), the lead wedge (30) and the opposing wedge (40) in the shape of wedges which are slid between both ends of the aforementioned main holder bodies (10) (20) to narrow or widen the space between the aforementioned main holder bodies (10) (20), and the groove fastening screw (50) that is fastened between the aforementioned lead wedge (30) and the opposing wedge (40) to be tightened or loosened in order to adjust the space between these.

EX1033 at p. 5 (¶ 2).

Chung also discloses that:

> …main holder bodies (10) (20) form an arch shape by being positioned facing each other symmetrically, and long penetrating holes (11) (21) through which back bone implant materials can pass through are formed at the center, and sloped guiding surfaces (13) (23) are formed in the diagonal direction on both ends, and dovetail grooves (14) (24) are formed along the aforementioned guiding surfaces (13) (23).

EX1033 at p. 5 (¶ 3).

Chung also discloses that:

> …on the outer surface each of the aforementioned main holder bodies (10) (20) that neighbor the back bones (1), one-direction saw tooth (12) (22) sloped toward the aforementioned opposing wedge (40) which is at the rear side, in order to prevent the aforementioned main holder bodies (10)(20) from derailing in the direction opposite to the entrance direction of the aforementioned main holder bodies (10) (20).

EX1033 at p. 5 (¶ 4).

Chung also discloses that:

> It is possible to separate the aforementioned wrapper (3) from the aforementioned penetrating hole (41) by rotating in reverse after surgery, and as illustrated in Figure 3 the component enables the operating person to grasp from the outside of the patient's body, and a wrench (2) is inserted through the center hole in order to be able to tighten the groove fastening screw (50).

EX1033 at p. 6 (¶ 3).

B. <u>McLuen (EX1030)</u>

McLuen, entitled "Bone Fusion Device," was published on November 9, 2006 and has an effective filing date of November 3, 2004. McLuen is prior art to the

‘268 patent under 35 U.S.C. § 102(a) (Pre-AIA). McLuen was not considered by the Examiner during the prosecution.

McLuen discloses an intervertebral expandable implant as best characterized for purposes of this petition by FIG 16:

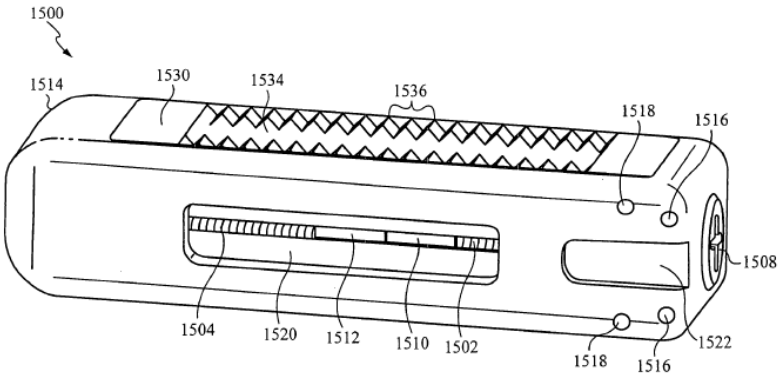

Fig. 16

EX1030 at FIG. 16.

McLuen discloses that:

> To secure the bone fusion device 1500 in place, a user generally utilizes an implement such as a screw driver to turn the positioning means 1508. Screw drivers unfortunately have the ability to slip out of place. When performing surgery near someone's spine, it is preferable to prevent or at least minimize the slipping ability. To do so, channels 1522 are implemented to receive a tool (not shown). The tool (not shown) has attachments that fit within the channels 1522 to secure the tool (not shown) in place.

EX1030 at [0076].

C. <u>Allen (EX1031)</u>

Allen, entitled “Spinal Fixator,” issued on August 19, 1997. Allen is prior art to the ‘268 patent under 35 U.S.C. § 102(b) (Pre-AIA). Allen was not considered

by the Examiner during the prosecution of the application leading to the '268 patent.

Allen discloses a tool for positioning and expanding an intervertebral expandable implant, as best characterized for purposes of this petition by FIG 12:

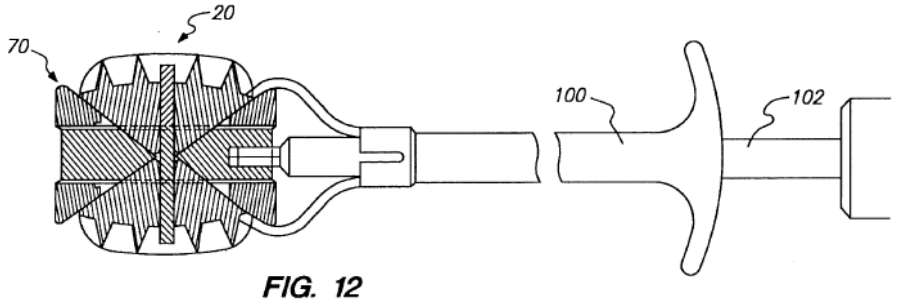

EX1031 at FIG. 12.

Allen discloses that:

> A conventional, hollow insertion tool 100 is used to gasp a nut assembly 70 to insert the retracted spinal fixator 20 between the two vertebrae bodies 4. Following placement as in FIG. 1, a tool 102 having a terminus defining a hex configuration is inserted through the insertion tool 100 to engage in aperture 60 in the core member 50. The tool 102 is used to rotate core member 50 to extend the crowns 90 outwardly thereby forcing the teeth 98 into the vertebral body 4. As shown in FIG. 13, rotation of the core member 50 by the tool 102 causes the nut assemblies 70 to retract inside the housing. Retraction of the nut assemblies 70 forces the teeth 98 upward as the flanges 92 slide within the channels 76. As the four separate crown members 90 extend outwardly, the teeth 98 penetrate the vertebral bodies 4.

EX1031 at 5:19-31.

D. <u>Sutcliffe (EX1032)</u>

Sutcliffe, entitled "Anchorable Vertebral Implant" was published on October 3, 2002 and has an effective filing date of April 2, 2001. Sutcliffe is prior art to the

‘268 patent under 35 U.S.C. § 102(b) (Pre-AIA). Sutcliffe was not considered by the Examiner during the prosecution of the application leading to the ‘268 patent.

Sutcliffe discloses an intervertebral expandable implant as best characterized for purposes of this petition by FIGs 3 and 6:

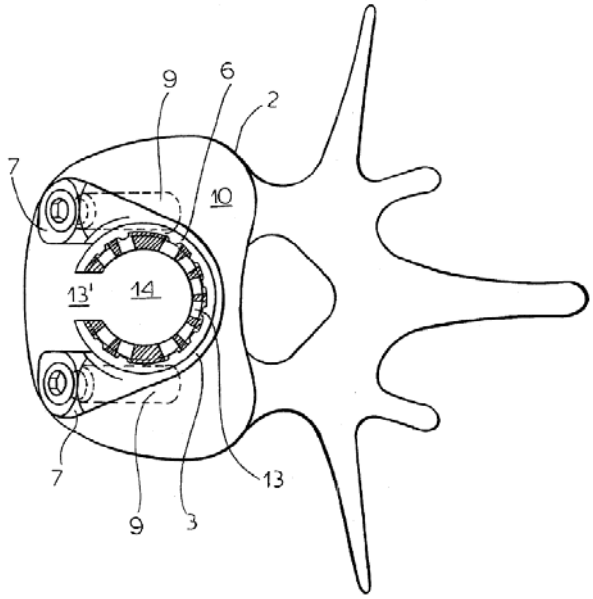

FIG.3

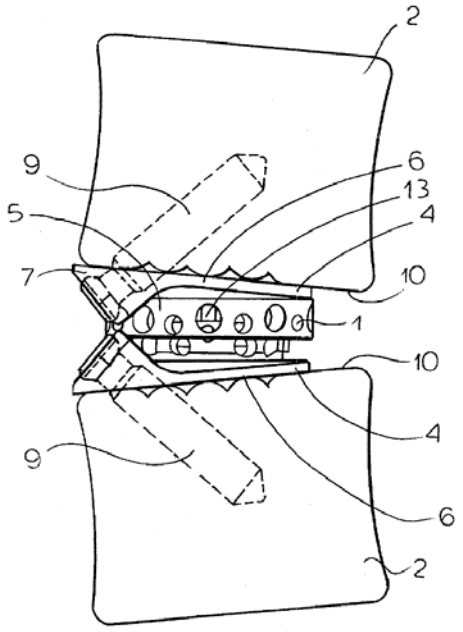

FIG.6

EX1032 at FIGs. 3 and 6.

Sutcliffe discloses that:

> …lower part 3 is unitarily formed with a pair of eyes 6 having collars 7 defining holes or passages 8 with cylindrical inner surfaces 12 extending at an acute angle of between 25° and 65° to the lower vertebral surface 10, here 45°. Cortical screws 9 extend through these eyes 6 and into the lower vertebra 2 to solidly anchor the lower part 3 to the lower vertebra 2. FIG. 6 shows how a similar pair of eyes 6 can be formed on the upper end part 4 in an arrangement allowing the implant 1 to be installed through a very small surgical opening.

EX1032 at [0024]

IX. GROUND 1: CHUNG IN VIEW OF MCLUEN AND FURTHER VIEW OF ALLEN RENDERS CLAIMS 1, 3, 5, AND 7-10 OBVIOUS

As further discussed below, the combination of prior art references teaches each and every element and limitation of the Challenged Claims.

As discussed more below, a PHOSITA would have considered the subject

matter recited in claims 1, 3, 5, and 7-11 of the '268 patent to be obvious.

A. <u>Independent Claim 1</u>

[1.1] *A system comprising:*
an intervertebral expandable implant having a first vertebral body engagement surface for engaging a first vertebral body and a second vertebral body engagement surface for engaging a second vertebral body, wherein the second vertebral body engagement surface is positioned opposite of the first vertebral body engagement surface, the intervertebral expandable implant comprising:

Chung discloses an intervertebral expandable implant having a first vertebral body engagement surface for engaging a first vertebral body (inferior or superior) and a second vertebral body engagement surface for engaging a second vertebral body (superior or inferior) wherein the second vertebral body engagement surface is positioned opposite of the first vertebral body engagement surface. *See, e.g.,* EX1033 at 5 (¶¶ 2-4); FIGs. 1 and 3; EX1003 at ¶ 107.

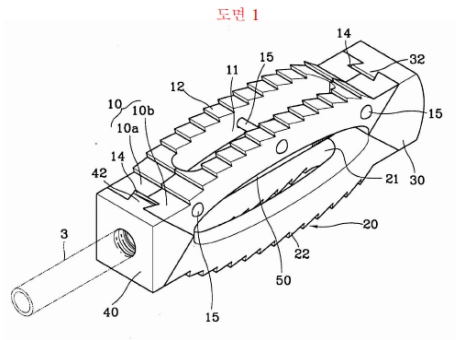

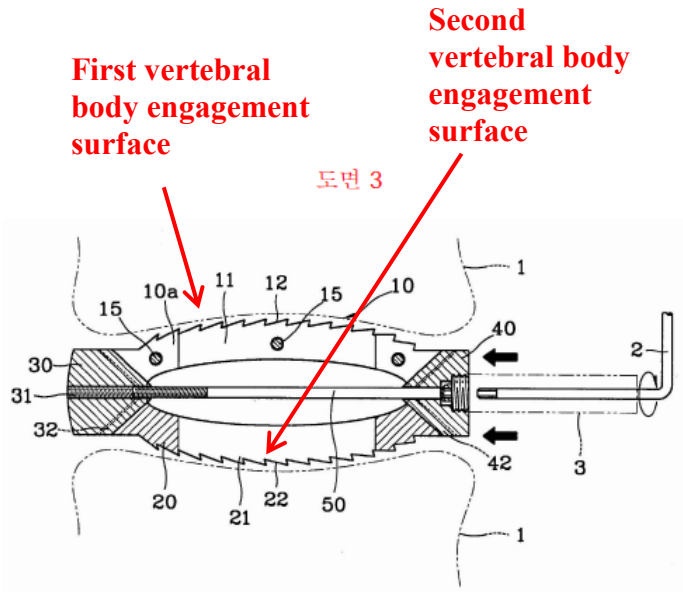

Chung discloses, as illustrated in FIGs. 1 and 3, a lumbar holder (intervertebral expandable implant) composed of the holder body (10) and opposing body (20) that come into contact with the back bones (1) into which the lumbar holder (intervertebral expandable implant) is inserted. EX1033 at 5 (¶ 2); EX1003 at ¶¶ 108-109.

> [1.2]*a first implant structure defining the first vertebral body engagement surface and a first angled wedge portion that is angled with respect to the first vertebral body engagement surface, wherein the first angled wedge portion comprises a first inwardly-facing rail and a second inwardly-facing rail, wherein a first inwardly-facing slot is defined at a location adjacent the first inwardly-facing rail between the first inwardly-facing rail and the first vertebral body engagement surface, wherein a second inwardly-facing slot is defined at a location adjacent the second inwardly-facing rail between the second inwardly-facing rail and the first vertebral body engagement surface,*

Chung discloses a first implant structure (10 and 30) defining the first vertebral body engagement surface and a first angled wedge portion (13) that is angled with respect to the first vertebral body engagement surface, with a first angled wedge portion (13) having first and second inwardly-facing rails and corresponding adjacent first and second inwardly-facing slots (14), between the respective rails and the body engagement surface. *See, e.g.,* EX1033 at 5 (¶¶ 2-4, 7-8); FIGS 1 and 2; EX1003 at ¶ 110.

도면 1

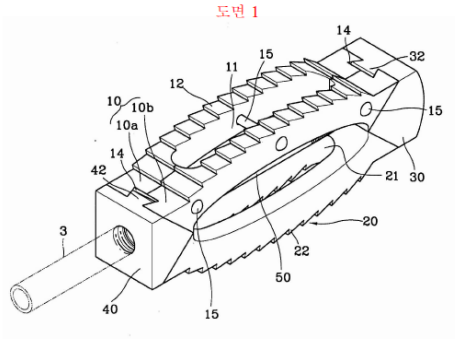

도면 2

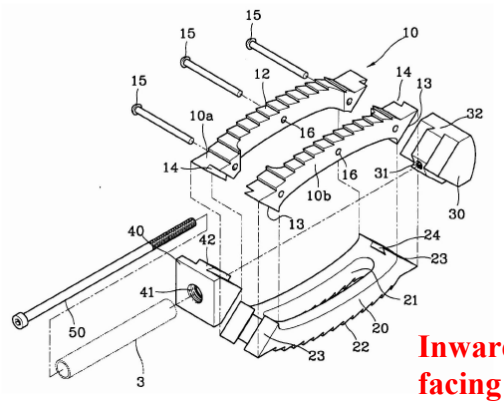

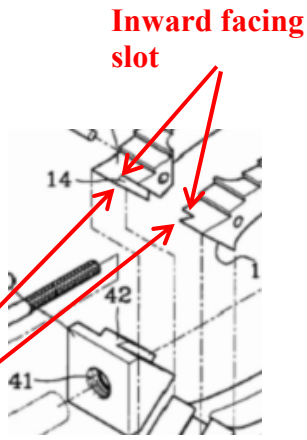

Chung discloses that lead wedge (30) and the opposing wedge (40) are a pair of separation devices to adjust the space between the main holder bodies (10) (20). Guiding surfaces (13) (23) of the front and rear parts of main holder bodies (10) (20) are dovetails (32) (42), whose contacting surfaces are fitted to the dovetail grooves (14) (24) of the main holder bodies (10) (20). EX1033 at 5 (¶8); EX1003 at ¶ 110.

A PHOSITA would have understood that Chung discloses a first angled wedge portion (13) having a first inwardly-facing rail (labeled above) and a second inwardly-facing rail (labeled above), a first inwardly-facing slot (labeled above) at a location adjacent the first inwardly-facing rail between the first inwardly-facing rail

and the first vertebral body engagement surface and a second inwardly-facing slot (labeled above) at a location adjacent the second inwardly-facing rail between the second inwardly-facing rail and the first vertebral body engagement surface. EX1003 at ¶¶ 111-112.

> [1.3]*wherein the first implant structure defines first and second opposing side surfaces positioned on opposite sides of the first vertebral body engagement surface, wherein the first implant structure defines an end gap between the first and second opposing side surfaces at a first end of the first vertebral body engagement surface,*

Chung discloses the first implant structure (10 and 30) defines first and second opposing side surfaces (labeled below) positioned on opposite sides of the first vertebral body engagement surface, the first implant structure defines an end gap (labeled below) between the first and second opposing side surfaces at a first end of the first vertebral body engagement surface. *See, e.g.,* EX1033 at 5 (¶¶ 2-4, 7-8); FIG 1; EX1003 at ¶ 113.

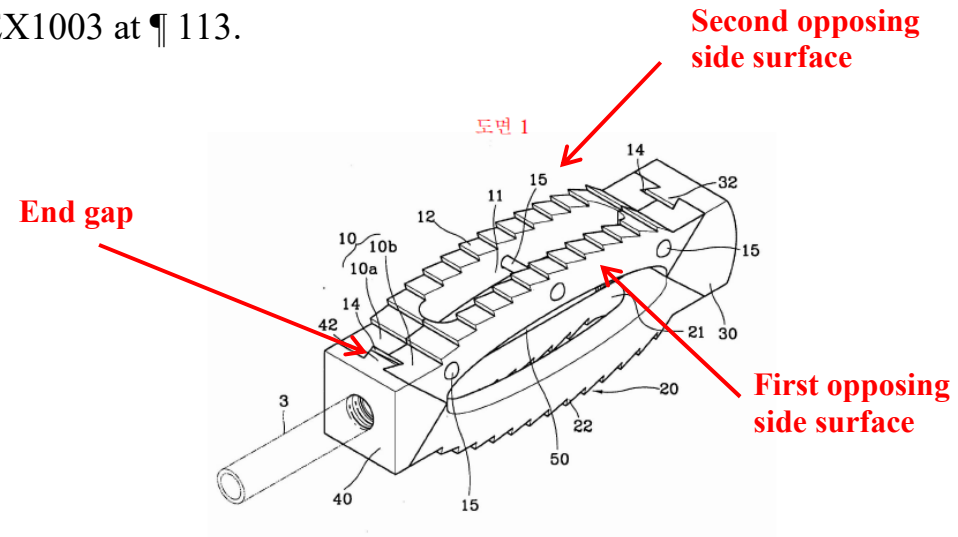

Chung discloses that the holder body (10) comes into contact with the neighboring back bones (1). EX1033 at 5 (¶2); FIG 1. The main holder bodies (10) (20) form an arch shape by being positioned facing each other symmetrically, and long penetrating holes (11) (21) through which back bone implant materials can pass are formed at the center between the first and second opposing side surfaces at a first end of the first vertebral body engagement surface. EX1033 at 5 (¶3); FIG 1; EX1003 at ¶ 113.

> [1.4]*wherein the first vertebral body engagement surface comprises a plurality of ridges extending from the first vertebral body engagement surface, wherein at least some of the ridges are positioned on the first vertebral body engagement surface on opposite sides of the end gap;*

Chung discloses a first vertebral body engagement surface comprises a plurality of ridges (12) extending from the first vertebral body engagement surface, at least some of the ridges are positioned on the first vertebral body engagement surface on opposite sides of the end gap. *See, e.g.,* EX1033 at 5 (¶¶ 2-4); FIG 1; EX1003 at ¶ 114.

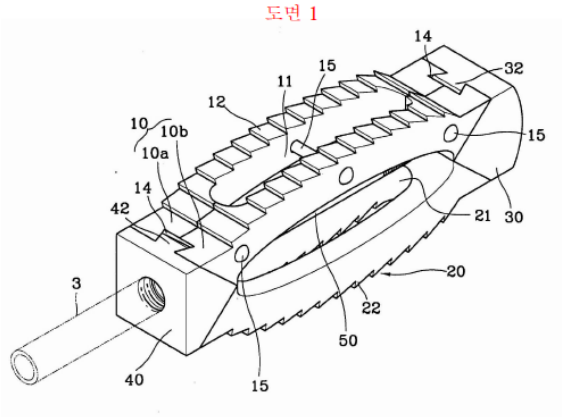

Chung discloses one-direction saw tooth (12) engage the contact surfaces of vertebrae (1) to resist implant expulsion. EX1033 at 5 (¶¶3-4); FIG 1. To the extent that Chung does not show saw teeth (12) on the opposite end of the end gap, it would have been obvious to extend the saw teeth (12) pattern to the edges of the first vertebral body engagement surfaces as a matter of simple design choice to achieve the goal of improved fixation. EX1003 at ¶ 114.

> [1.5]*a second implant structure defining a second angled wedge portion that comprises a first outwardly-facing rail and a second outwardly-facing rail that faces outwardly in a direction opposite that of the first outwardly-facing rail, wherein a first outwardly-facing slot is defined at a location adjacent the first outwardly-facing rail, wherein a second outwardly-facing slot is defined at a location adjacent the second outwardly-facing rail, wherein the first implant structure is slidably-engaged with the second implant structure such that the first angled wedge portion engages the second angled wedge portion with the first inwardly-facing rail of the first implant structure positioned in the first outwardly-facing slot of the second implant structure, the second inwardly-facing rail of the first implant structure positioned in the second outwardly facing slot of the second implant structure, the first outwardly-facing rail of the second implant structure positioned in the first inwardly-facing slot of the first implant structure, and the second*

outwardly-facing rail of the second implant structure positioned in the second inwardly-facing slot of the first implant structure,

Chung discloses a second implant structure (40 and 20) defining a second angled wedge portion that comprises a first and second outwardly-facing rail that face in a direction opposite to each other and a first and second outwardly facing slot that are adjacent to the first and second outwardly-facing rails, respectively. *See, e.g.,* EX1033 at 5 (¶¶ 2-4, 7-8); FIGs 1-2; EX1003 at ¶ 115.

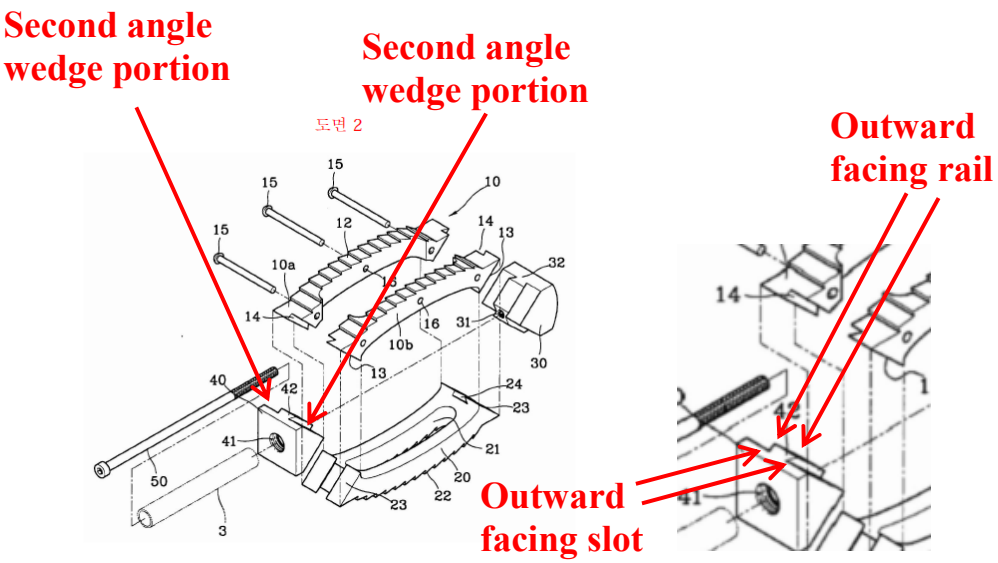

도면 1

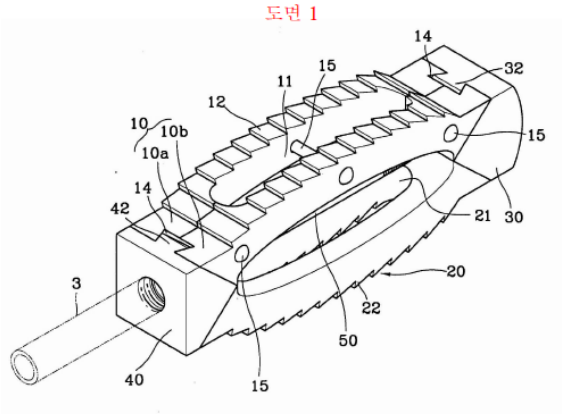

Chung discloses that lead wedge (30) and the opposing wedge (40) are a pair of separation devices to adjust the space between the main holder bodies (10) (20), and are in contact with the guiding surfaces (13) (23) of the front and rear parts of the main holder bodies (10) (20). Dovetails (32) (42) have contacting surfaces fitted to the dovetail grooves (14) (24) of the main holder bodies (10) (20) along the lengthwise direction. EX1033 at 5 (¶8); FIG 1 and 2; EX1003 at ¶ 115.

A PHOSITA would have understood that Chung discloses a first outwardly-facing slot (labeled above) defined at a location adjacent the first outwardly-facing rail (labeled above) and a second outwardly-facing slot (labeled above) is defined at a location adjacent the second outwardly-facing rail (labeled above). ; EX1003 at ¶ 116.

A PHOSITA would have understood that the first implant structure (10 and 30) is slidably-engaged with the second implant structure (40 and 20) as noted in FIGs 3 and 4 below. EX1003 at ¶ 116.

도면 3

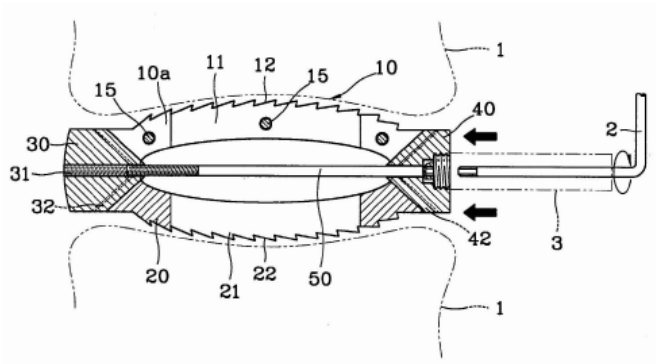

도면 4

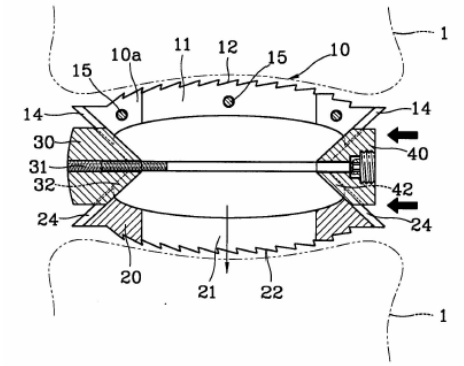

A PHOSITA would have understood that sliding engagement is accomplished by the first angled wedge portion (13) engaging the second angled wedge portion with the first inwardly-facing rail of the first implant structure positioned in the first outwardly-facing slot of the second implant structure, the second inwardly-facing rail of the first implant structure positioned in the second outwardly facing slot of the second implant structure, the first outwardly-facing rail of the second implant structure positioned in the first inwardly-facing slot of the first implant structure, and the second outwardly-facing rail of the second implant structure positioned in the second inwardly-facing slot of the first implant structure. EX1003 at ¶ 117.

> [1.6]*wherein the second implant structure defines third and fourth opposing side surfaces positioned on opposite sides of the second vertebral body engagement surface,*

Chung discloses the second implant structure (40 and 20) defines third and fourth opposing side surfaces (labeled below) positioned on opposite sides of the second vertebral body engagement surface. *See, e.g.,* EX1033 at 5 (¶¶ 6-7); FIG 1

and 2; EX1003 at ¶ 118.

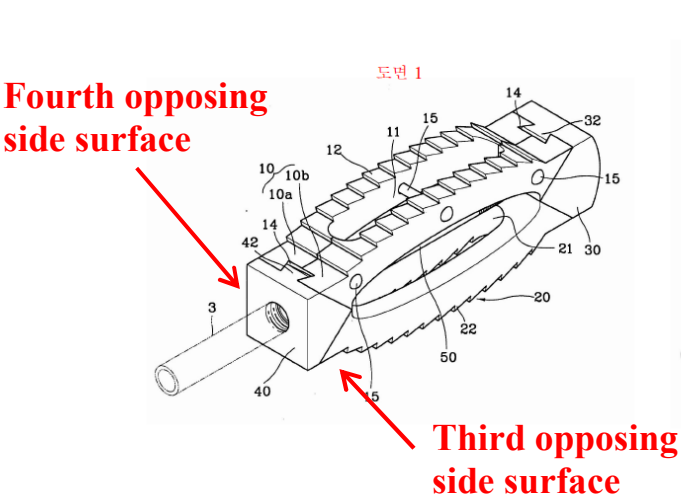

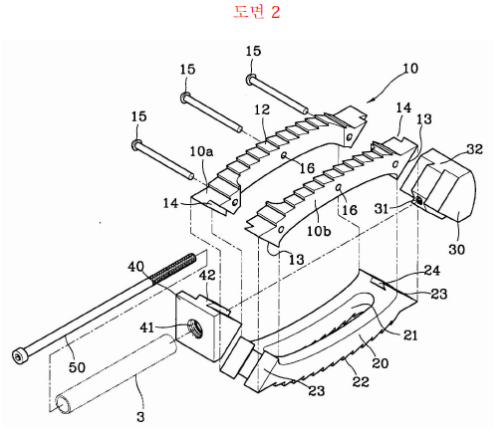

[1.7] *wherein the second implant [structure] defines first and second tool engagement indentations on the third and fourth opposing side surfaces, respectively, wherein the first and second tool engagement indentations are positioned proximate a proximate end of the second implant structure, and*

Chung discloses the second implant [structure] (40 and 20) defines tool engagement indentations for engagement of tool (3). *See, e.g.,* EX1033 at 6 (¶¶ 2-4); FIGs 1-3; EX1003 at ¶ 119.

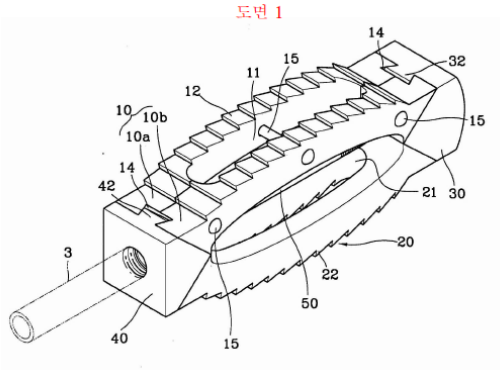

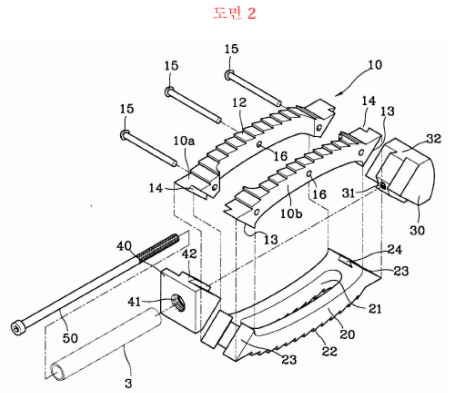

도면 3

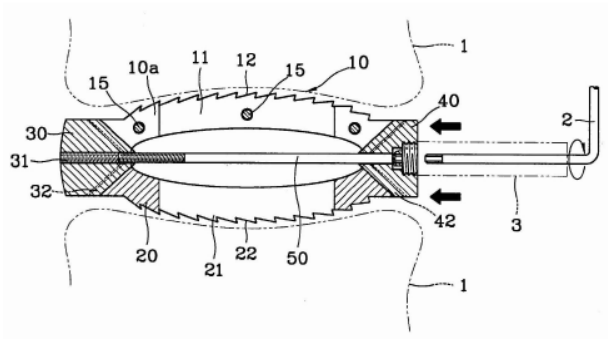

A PHOSITA would have understood that Chung discloses that the opposing wedge (40) has a penetrating hole (41) with a counter bore ("double raised spot structure") that expands to the external side, and on the inner circumference of the large diameter side of the penetrating hole (41), a screw thread ("line") is formed so that a circular pipe tool ("wrapper") (3) can be used by the surgeon to hold and position the implant. EX1033 at 6 (¶ 2-3); EX1003 at ¶ 119.

To the extent that Chung does not explicitly disclose first and second tool engagement indentations on the third and fourth opposing side surfaces of the second implant (40 and 20), it would have been obvious to PHOSITA as a matter of simple substitution to modify the implant disclosed to move the indentation from the hole (41) to the third and fourth opposing sides of the second implant structure (40 and 20), so that the first and second tool engagement indentations are positioned proximate a proximate end of the second implant structure. Stated another way, placement and positioning of indentations for insertion tool engagement at the proximate end of the second implant structure is a predictable substitution that does

not affect the function of the implant. EX1003 at ¶ 120.

McLuen discloses an intervertebral expandable implant (e.g. 1500). EX1030 at [0077]; FIG. 16; EX1003 at ¶ 76.

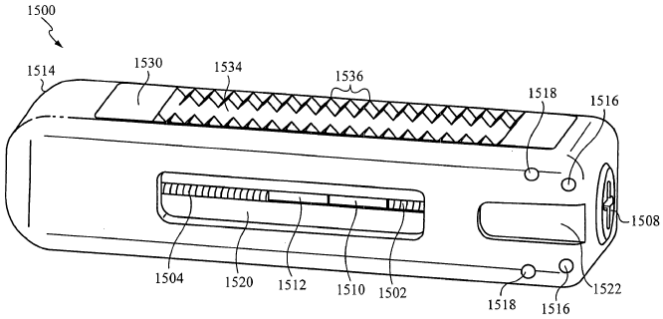

Fig. 16

A positioning screw (1508) is located proximate to a proximate end of implant (1500). EX1030 at [0076]; [0077]; FIG. 16. McLuen discloses to secure the implant (1500), a user would generally use a tool such as a screwdriver to turn screw (1508). McLuen also discloses that screwdrivers may slip out of place when performing surgery near a patient's spine and it is preferable to prevent or at least minimize slipping. *Id.* at [0076]. To do so, McLuen discloses channels or indentations (1522) on opposing sides of the implant to receive a tool. EX1030 at [0076]; FIG. 16; EX1003 at ¶ 120.

It would therefore have been obvious to a PHOSITA to combine the teachings of Chung with McLuen to modify the indentation disclosed in Chung as disclosed in McLuen, moving the indentation from the counter bored structure of penetrating hole (41) to a position proximate a proximate end of the second implant structure to provide the disclosed advantages of prevention or minimization of screw driver

slippage. EX1003 at ¶¶ 121.

[1.8] *wherein the second implant structure defines an adjusting screw hole sized for receiving an adjusting screw at a proximal portion of the second implant structure between the third and fourth side surfaces; and*

Chung discloses the second implant structure (40 and 20) defines an adjusting screw hole (41) sized for receiving an adjusting screw (50) at a proximal portion of the second implant structure (40 and 20) between the third and fourth side surfaces. *See, e.g.,* EX1033 at 6 (¶¶ 2-3); FIGs 1 and 2. EX1003 at ¶ 122.

도면 2

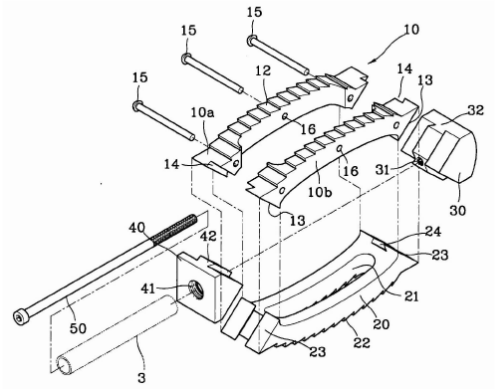

도면 1

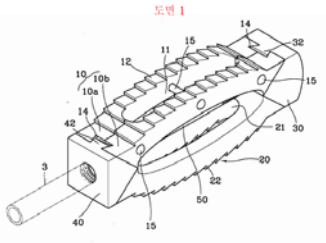

[1.9] *an adjusting screw positioned in the adjusting screw hole;*

Chung discloses an adjusting screw (50) positioned in the adjusting screw hole (41). *See, e.g.,* EX1033 at 6 (¶ 4); FIG 3. EX1003 at ¶ 123.

도면 3

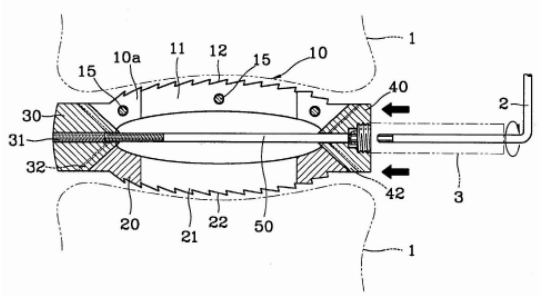

[1.10] *a first tool having a first proximal end and a first distal end with first and second engagement prongs positioned at the first distal end and defining an adjusting tool passage extending through the first tool from the first proximal end to the first distal end, wherein the first and second engagement prongs are sized and positioned to extend into the first and second tool engagement indentations of the second implant structure so as to allow the first tool to engage the intervertebral expandable implant; and*

A PHOSITA would have understood that Chung discloses that a circular pipe tool ("wrapper") (3) can be used by the surgeon to hold and position the implant. EX1033 at 6 (¶ 2-3). Further, Chung discloses that the circular pipe tool (3) has an adjusting tool passage for receiving wrench (2). EX1033 at 6 (¶ 2-3); FIG. 3; EX1003 at ¶ 124.

Allen discloses a hollow first tool (100) having a first proximal end and a first distal end with first and second engagement prongs positioned at the first distal end and an adjusting tool passage extending through the first tool from the first proximal end to the first distal end. A tool (102) can be inserted through the insertion tool (100). EX1031 at 5:5-47; FIG 12; EX1003 at ¶ 125.

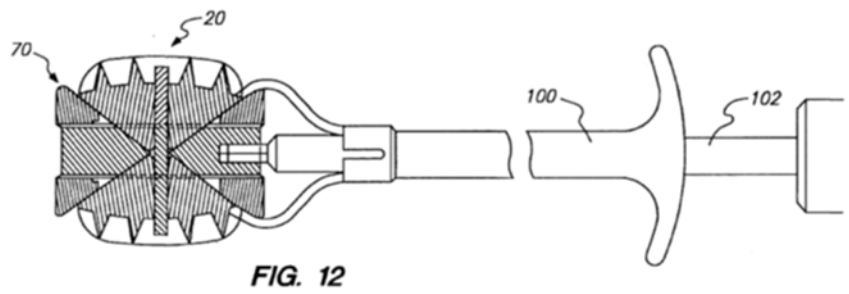

A PHOSITA would have understood that the first and second engagement prongs of the insertion tool (100) are sized and positioned to extend into the first and second tool engagement indentations of a structure (the second implant structure (40 and 20) of Chung in view of McLuen noted above) to allow the first tool to engage the intervertebral expandable implant. EX1003 at ¶ 125.

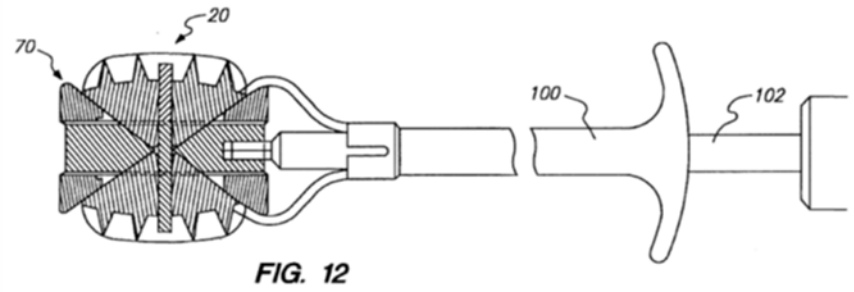

It would have therefore been obvious to a PHOSITA to use the prongs on the tool disclosed by Allen to engage the first and second tool indentations of the second implant structure disclosed by Chung in combination with McLuen to insert the implant into the disk space between adjacent vertebrae . EX1003 at ¶ 127.

> [1.11] *a second adjusting tool having a second proximal end and a second distal end with a handle positioned at the second proximal end, a screw engagement portion positioned at the second distal end, and a shaft extending from the handle to the screw engagement*

> *portion, wherein the screw engagement portion is sized and configured for engaging and turning the adjusting screw when the screw engagement portion is engaged with the adjusting screw,*
>
> *wherein the shaft of the second adjusting tool is sized with a smaller diameter than that of the adjusting tool passage such that the second adjusting tool can extend through the adjusting tool passage of the first tool to engage and turn the adjusting screw of the intervertebral expandable implant to expand the intervertebral expandable implant when the first and second engagement prongs of the first tool are engaged with the first and second tool engagement indentations of the intervertebral expandable implant.*

A PHOSITA would have understood that Chung discloses that circular pipe tool ("wrapper") (3) can be used by the surgeon to hold and position the implant. EX1033 at 6 (¶¶ 2-3). Further, Chung discloses that the circular pipe tool (3) has an adjusting tool passage for receiving wrench (2). EX1033 at 6 (¶¶ 2-3); FIG. 3. The wrench (2) is used to tighten the adjusting screw (groove fastening screw (50)). *Id.*; EX1003 at ¶ 84. Since the wrench (2) is received within the circular pipe tool (3) and is used to tighten the adjusting screw, the shaft of the wrench (2) is sized with a smaller diameter than that of the adjusting tool passage. EX1003 at ¶ 128.

Allen discloses a hollow first tool (100) having a first proximal end and a first distal end with first and second engagement prongs positioned at the first distal end and an adjusting tool passage extending through the first tool from the first proximal end to the first distal end. A second adjusting tool (102) can be inserted through the insertion tool (100). EX1031 at 5:5-47; FIG 12; EX1003 at ¶ 129.

A PHOSITA would have understood that the first and second engagement prongs of the insertion tool (100) are sized and positioned to extend into the first and second tool engagement indentations of a structure (the second implant structure (40 and 20) of Chung in view of McLuen noted above) to allow the first tool to engage the intervertebral expandable implant. EX1003 at ¶ 129.

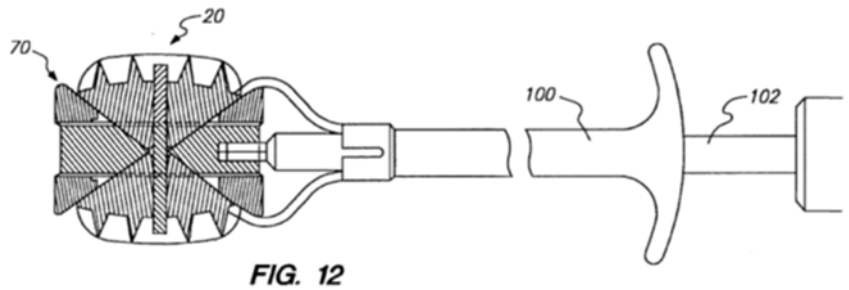

FIG. 12

Allen discloses that following placement of the implant, the tool (102), having a handle positioned at a proximal end and a screw engagement portion positioned at a distal end, the screw engagement portion having a terminus defining a hex configuration is inserted through the hollow insertion tool (100) to engage an adjusting screw. The tool (102) is used to rotate the adjusting screw to extend the implant outwardly thereby forcing the ridges/teeth of the vertebral engagement surface into the vertebral body. EX1031 at 5:19-26. Since the wrench (2) is received within the circular pipe tool (3) and is used to tighten the adjusting screw, the shaft of the wrench (2) is sized with a smaller diameter than that of the adjusting tool passage. EX1031 AT 5:19-26; FIG. 12; EX1003 at ¶¶ 130 and 131.

A PHOSITA would have known and understood that orthopedic surgical

instruments with cannulated handles bodies, through which instruments and devices could be delivered from the proximal (at the surgeon's hands) to the distal (implantation location) intrasurgical sites, were in common use at the time. Similar devices were also used in arthroscopic and endoscopic surgery. EX1003 at ¶ 131.

It would have been obvious to a PHOSITA to combine/use the first tool of Allen to position the first and second engagement prongs of Allen into the first and second tool engagement indentations of the second implant structure of Chung in combination with McLuen to insert the intervertebral expandable implant into the disk space between adjacent vertebrae. Then, using the second adjusting tool of Allen to pass through a cannula in the first tool to turn the adjusting screw to expand the implant of Chung. EX1003 at ¶ 131.

3. The system of claim 1, and further comprising means to facilitate incorporation into and fusion with the superior and inferior vertebral bodies.

Chung discloses that main holder bodies (10) (20) form an arch shape by being positioned facing each other symmetrically and have long penetrating holes (11) (21) through which bone implant materials can pass through. EX1033 at 5 (¶ 3); EX1003 at ¶ 132.

A PHOSITA would have understood that bone implant materials were typically used in vertebral body fusion operations. EX1003 at ¶ 132.

A PHOSITA would have understood that the long penetrating holes disclosed by Chung provide a pathway for bone ingrowth and resulting incorporation and fusion with the superior and inferior vertebral bodies. *Id.*

도면 2

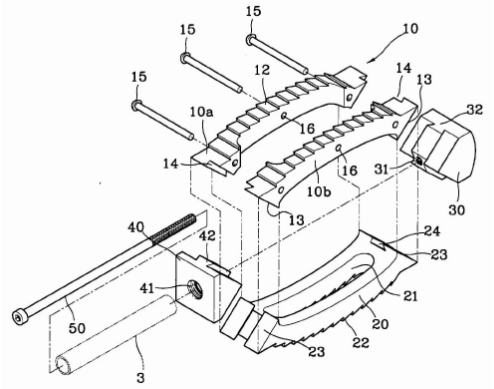

> *5. The system of claim 1, wherein the second implant structure defines an indentation adjacent the screw hole.*

Chung discloses a threaded counter bore in opposing wedge (40) that expands to the external side and that creates an indentation adjacent the screw hole (41). *See, e.g.,* EX1033 at 6 (¶2); EX1003 at ¶ 133.

> *7. The system of claim 1, wherein rotation of the adjusting screw with respect to the second implant structure moves the second implant structure with respect to the first implant structure to slide the first angled wedge portion with respect to the second angled wedge portion and expand the intervertebral expandable implant.*

Chung discloses rotation of the adjusting screw (50) with respect to the second implant structure (40 and 20) moves the second implant structure with respect to the

first implant structure (10 and 30) to slide the first angled wedge portion (13) with respect to the second angled wedge portion and expand the intervertebral expandable implant. *See, e.g.,* EX1033 at 6 (¶5-7); FIGs 2 and 4; EX1003 at ¶ 134.

도면 2

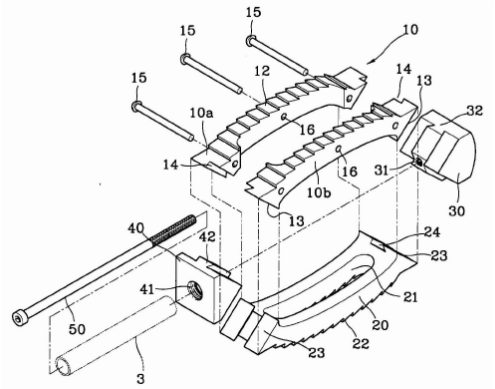

도면 4

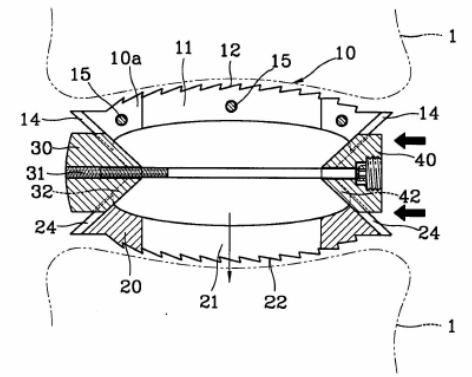

> *8. The system of claim 1, wherein the adjusting screw extends through a portion of the first implant structure that is larger than a diameter of the threaded shaft of the adjusting screw so as to allow the first implant structure to move with respect to the adjusting screw along a direction normal to the first vertebral body engagement surface of the first implant structure when the intervertebral expandable implant is expanded.*

Chung discloses that adjusting screw (50) extends through the first implant structure (10 and 30), which is larger than a diameter of the adjusting screw. EX1033 at 5 (¶2); FIGs 2 and 4; EX1003 at ¶ 135.

Chung discloses that rotation of the adjusting screw (50) with respect to the first and second implant structure (40 and 20) moves the second implant structure with respect to the first implant structure (10 and 30). *See, e.g.,* EX1033 at 6 (¶5-7);

FIGs. 2 and 4. EX1003 at ¶ 135. During implant expansion, the first implant structure (10 and 30) moves along a direction normal to the first vertebral body engagement surface. EX1033 at FIGs. 3 and 4; EX1003 at ¶ 135.

> [9.1]. *A method of using the system of claim 1, the method comprising: connecting the first tool to the intervertebral expandable implant with the first and second engagement prongs engaged with the first and second tool engagement indentations;*

As discussed above with respect to claim 1, it would have been obvious to a PHOSITA to combine/use the tool of Allen to position the first and second engagement prongs of Allen into the first and second tool engagement indentations of the second implant structure of Chung in combination with McLuen to insert the intervertebral expandable implant into the disk space between adjacent vertebrae to resist torque during screw rotation. EX1003 at ¶ 136.

> [9.2] *implanting the intervertebral expandable implant into a disc space in a lumbar spine via the first tool using a transforaminal lumbar interbody fusion (TLIF) approach;*

Chung discloses a lumbar holder that is composed of the holder body (10) and opposing holder body (20) that come into contact with the neighboring back bones (1) into which the lumbar holder is to be inserted, as well as the lead wedge (30), and the opposing wedge (40), which are between both ends of the main holder bodies (10) (20) and are used to narrow or widen the space between the main holder bodies (10) (20) by the groove fastening screw (50) that is fastened between the lead wedge

(30) and the opposing wedge (40) as it is tightened or loosened to adjust the space between wedges. EX1033 at 5 (¶2); FIGs 2 and 4; EX1003 at ¶ 137.

도면 2

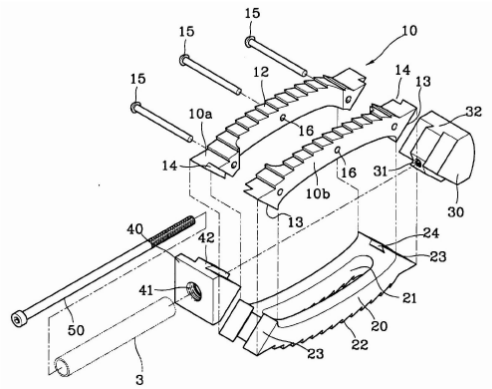

도면 4

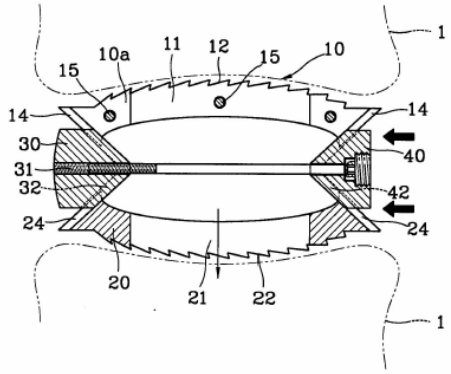

A PHOSITA would have understood that during the transforaminal approach, the surgical window is created through the removal of a facet joint to provide access to the disk space. A PHOSITA would further have understood that this narrow surgical window requires an appropriately shaped cage. EX1003 at ¶ 138.

To the extent that Chung does not disclose use in a TLIF approach, a PHOSITA would have further understood that the narrow, low profile geometry of the cage disclosed by Chung would be appropriate for use in a TLIF procedure. Further modifications for use in this application would be a matter of additional optimization of the geometry that would not affect the function of the invention and would therefore be an obvious design choice. *Id.*

> [9.3] *extending the second adjusting tool through the first tool to engage the adjusting screw of the intervertebral expandable implant;*

and

As discussed above with respect to claim [1.11], a PHOSITA would have known and understood that orthopedic surgical instruments with cannulated handles/bodies, through which instruments and devices could be delivered from the proximal (at the surgeon's hands) to the distal (implantation location) intrasurgical sites, were in common use at the time. Similar devices were also used in arthroscopic and endoscopic surgery. EX1003 at ¶ 139.

It would therefore have been obvious to a PHOSITA to combine/use the first tool of Allen to position the first and second engagement prongs of Allen into the first and second tool engagement indentations of the second implant structure of Chung in combination with McLuen to insert the intervertebral expandable implant into the disk space between adjacent vertebrae. Then, using the second adjusting tool of Allen to pass through a cannula in a first tool to turn the adjusting screw to expand the implant of Chung. *Id.*

> [9.4] *expanding the intervertebral expandable implant by turning the second adjusting tool to turn the adjusting screw of the intervertebral expandable implant.*

As discussed above with respect to claim [1.11], it would have been obvious to a PHOSITA to combine/use the first tool of Allen to position the first and second engagement prongs of Allen into the first and second tool engagement indentations

of the second implant structure of Chung in combination with McLuen to insert the intervertebral expandable implant into the disk space between adjacent vertebrae. Then, using the second adjusting tool of Allen to pass through a cannula in a first tool to turn the adjusting screw to expand the implant of Chung. EX1003 at ¶ 139.

> *10. A method of using the system of claim 1, the method comprising: connecting the first tool to the intervertebral expandable implant with the first and second engagement prongs engaged with the first and second tool engagement indentations; implanting the intervertebral expandable implant into a disc space in a lumbar spine via the first tool using a posterior lumbar interbody fusion (PLIF) approach; extending the second adjusting tool through the first tool to engage the adjusting screw of the intervertebral expandable implant; and expanding the intervertebral expandable implant by turning the second adjusting tool to turn the adjusting screw of the intervertebral expandable implant.*

As discussed above with respect to claim 1 and 9, it would have been obvious to a PHOSITA to combine/use the first tool of Allen to position the first and second engagement prongs of Allen into the first and second tool engagement indentations of the second implant structure of Chung in combination with McLuen to insert the intervertebral expandable implant into the disk space between adjacent vertebrae. Then, using the second adjusting tool of Allen to pass through a cannula in the first tool to turn the adjusting screw to expand the implant of Chung. EX1003 at ¶ 140.

To the extent that Chung does not disclose a posterior lumbar interbody fusion (PLIF) approach, a PHOSITA would have understood the Chung device is of a low-profile and narrow geometry typical for posterior devices. Further, a PHOSITA

would have understood that the lumbar spine is almost exclusively the location in which interbody cages are implanted using a posterior approach. Therefore, it would have been obvious that the implant disclosed by Chung would be appropriate for use in a PLIF procedure. EX1003 at ¶ 141.

도면 4

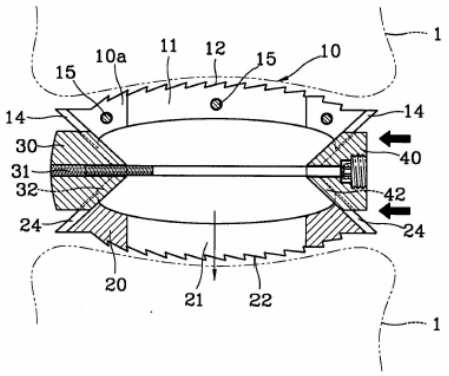

X. GROUND 2: CHUNG IN VIEW OF MCLUEN IN FURTHER VIEW OF ALLEN AND IN FURTHER VIEW OF SUTCLIFFE RENDERS CLAIMS 11 AND 21-26 OBVIOUS

As further discussed below, Chung in view of McLuen and Allen, as already discussed above, and further in view of Sutcliffe, teaches each and every element and limitation of dependent 11 and independent 21 and its dependent claims 22-26.

As discussed more below, a POSITA would have considered the subject matter recited in claims 11 and 21-26 of the '268 obvious.

> *11. A method of using the system of claim 1 to insert the intervertebral expandable implant into a disc space of a spine from an anterior or lateral path, the method comprising: connecting the first tool to the intervertebral expandable implant with the first and second engagement prongs engaged with the first and second tool engagement indentations; implanting the intervertebral expandable implant into*

> *the disc space via the first tool; extending the second adjusting tool through the first tool to engage the adjusting screw of the intervertebral expandable implant; and expanding the intervertebral expandable implant by turning the second adjusting tool to turn the adjusting screw of the intervertebral expandable implant.*

As discussed above with respect to claim 1 and 9, it would have been obvious to a PHOSITA to combine/use the first tool of Allen to position the first and second engagement prongs of Allen into the first and second tool engagement indentations of the second implant structure of Chung in combination with McLuen to insert the intervertebral expandable implant into the disk space between adjacent vertebrae. Then, using the second adjusting tool of Allen to pass through a cannula in a first tool to turn the adjusting screw to expand the implant of Chung. EX1003 at ¶ 142.

Sutcliffe discloses an intervertebral expandable implant (1). EX1032 at [0022]. EX1003 at ¶ 143.

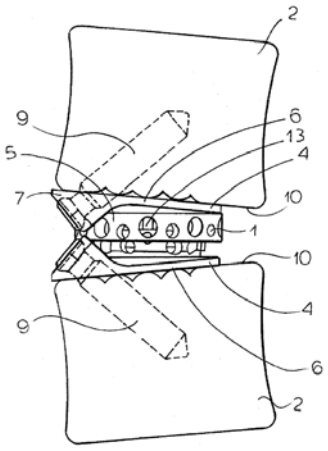

FIG.6

Sutcliffe discloses a lower part (3) is unitarily formed with a pair of eyes (6)

having collars (7) defining holes or passages (8) with cylindrical inner surfaces (12) extending at an acute angle of between 25º and 65º to the lower vertebral surface (10). Cortical screws (9) extend through these eyes (6) and into the lower vertebra (2) to solidly anchor the lower part (3) to the inferior vertebra (2). FIG. 6 shows how a similar pair of eyes (6) can be formed on the upper end part (4) to anchor it to the superior vertebra. EX1032 at [0024]; FIG. 6; EX1003 at ¶ 143.

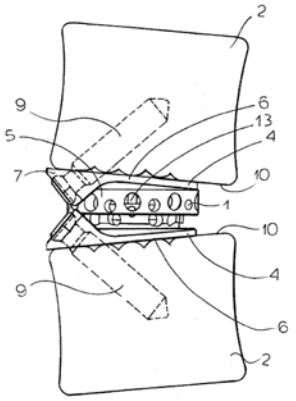

FIG.6

One or more through holes (13) are present in upper and lower parts (3) and (4). *Id.* at [0023]; FIG. 6. Sutcliffe also discloses that the upper part (4) has a pair of bent-up tabs or flanges (11) formed with openings (16) extending parallel to an upper vertebral surface (10). Cortical screws (9) extend through the openings 16 to anchor the upper part (4) to the upper vertebra (2). EX1032 at [0025]; EX1003 at ¶ 143.

Sutcliffe discloses anterior placement of the implant. EX1032 at [0026]; FIGs. 3-6; EX1003 at ¶ 143. *Id.*

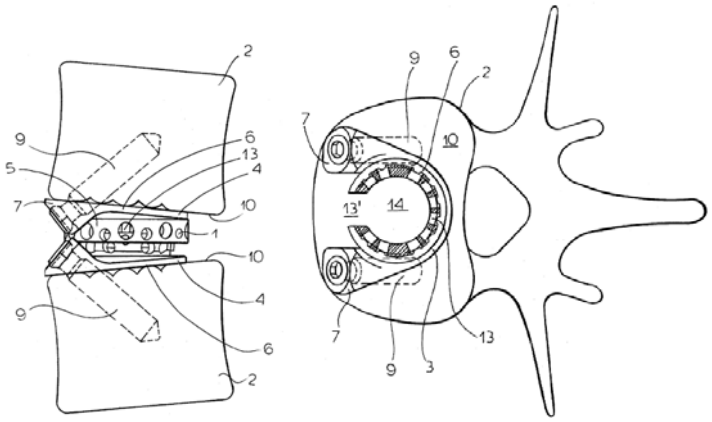

FIG.6 FIG.3

Chung does not expressly disclose an intended surgical approach. A PHOSITA would have understood that the implant disclosed by Chung could be adapted for use in an anterior or lateral approach by modifying the aspect ratio and dimensions of the implant to optimize it for the surgical approach. EX1003 at ¶ 144.

A PHOSITA would have further understood that the use of integrated plates and screws disclosed in Sutcliffe would be typically used in conjunction with a lateral or anterior approach for an intervertebral fusion device and could be readily combined with the device disclosed in Chung to provide enhanced primary stability. *Id.* at ¶ 145.

A PHOSITA would have further understood that the form factor and size of the combined implant could be adapted for use in either an anterior or lateral application, which would be a simple design choice that would yield a predictable result. *Id.*

A. Independent Claim 21

[21.1]. *A system comprising:*
an intervertebral expandable implant having a first vertebral body engagement surface and a second vertebral body engagement surface positioned opposite of the first vertebral body engagement surface for engaging inferior and superior vertebral bodies, the intervertebral expandable implant comprising:

a first implant structure defining the first vertebral body engagement surface and a first angled wedge portion that is angled with respect to the first vertebral body engagement surface, wherein the first angled wedge portion comprises a first inwardly-facing rail and a second inwardly-facing rail, wherein a first inwardly-facing slot is defined at a location adjacent the first inwardly-facing rail between the first inwardly-facing rail and the first vertebral body engagement surface, wherein a second inwardly-facing slot is defined at a location adjacent the second inwardly-facing rail between the second inwardly-facing rail and the first vertebral body engagement surface, wherein the first implant structure defines first and second opposing side surfaces positioned on opposite sides of the first vertebral body engagement surface; and

As discussed above with respect to claim [1.1-1.3], Chung discloses all of these claim elements. EX1003 at ¶ 146.

[21.2] *a second implant structure defining a second angled wedge portion that comprises a first outwardly-facing rail and a second outwardly-facing rail that faces outwardly in a direction opposite that of the first outwardly-facing rail, wherein a first outwardly-facing slot is defined at a location adjacent the first outwardly-facing rail, wherein a second outwardly-facing slot is defined at a location adjacent the second outwardly-facing rail, wherein the first implant structure is slidably-engaged with the second implant structure such that the first angled wedge portion engages the second angled wedge portion with the first inwardly-facing rail of the first implant structure positioned in the first outwardly-facing slot of the second implant structure, the second inwardly-facing rail of the first implant structure*

> *positioned in the second outwardly facing slot of the second implant structure, the first outwardly-facing rail of the second implant structure positioned in the first inwardly-facing slot of the first implant structure, and the second outwardly-facing rail of the second implant structure positioned in the second inwardly-facing slot of the first implant structure,*

As discussed above with respect to claim [1.5], Chung discloses all of these claim elements. EX1003 at ¶ 146.

> [21.3] *wherein the intervertebral expandable implant defines first and second screw guides positioned and configured to guide screws into the superior and inferior vertebral bodies, wherein at least one of the first and second implant structures defines at least one of the first and second screw guides,*

Sutcliffe discloses a lower part (3) is unitarily formed with a pair of eyes (6) having collars (7) defining holes or passages (8) with cylindrical inner surfaces (12) extending at an acute angle of between 25º and 65º to the lower vertebral surface (10). EX1032 at [0024]. Cortical screws (9) extend through these eyes (6) and into the lower vertebra (2) to solidly anchor the lower part (3) to the inferior vertebra (2). FIG. 6 shows how a similar pair of eyes (6) can be formed on the upper end part (4) to anchor it to the superior vertebra. EX1032 at [0024]; FIG. 6. One or more through going holes (13) are present in upper and lower parts (3) and (4). EX1032 at [0023]; FIG. 6. EX1003 at ¶ 147.

A PHOSITA have understood that collars (7) defining holes or passages (8) serve as first and second screw guides that constrain the position and direction of

screws (9) into the superior and inferior intervertebral bodies. EX1003 at ¶ 147.

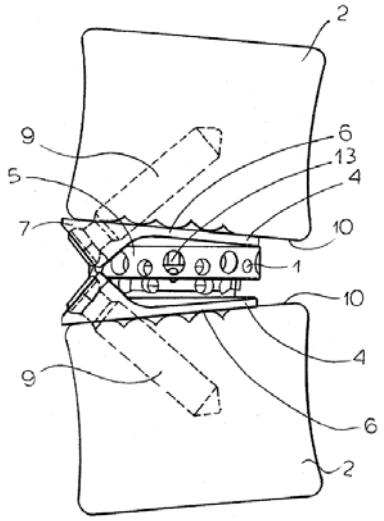

FIG.6

A PHOSITA would have further understood that the integrated plates and screws disclosed in Sutcliffe would be typically used in conjunction with a lateral or anterior approach for an intervertebral fusion device and could be readily combined with the device disclosed by Chung to provide enhanced primary stability. Modifying Chung in view of the teachings of Sutcliffe would provide screw guides, which were well known at the time, to orient and direct screws into the superior and/or inferior vertebral bodies and therefore yield this enhanced implant stability with a reasonable expectation of success. EX1003 at ¶ 148.

> [21.4] *wherein the intervertebral expandable implant further comprises an adjusting screw, and wherein the second implant structure defines first and second tool engagement indentations on opposing side surfaces of the second implant structure;*

As discussed above with respect to claim [1.7-1.9], Chung comprises an adjusting screw (50). It would have been obvious to a PHOSITA to combine the teachings of Chung with McLuen to modify the indentations disclosed in Chung as disclosed in McLuen, moving the indentation from the counter bored structure of penetrating hole (41) to a position proximate a proximate end of the second implant structure to provide the disclosed advantages of prevention or minimization of screwdriver slippage. This substitution would represent a design choice which would yield a predictable result with a reasonable expectation of success. EX1003 at ¶ 149.

> [21.5] *a first tool having a first proximal end and a first distal end with first and second engagement prongs positioned at the first distal end and defining an adjusting tool passage extending through the first tool from the first proximal end to the first distal end, wherein the first and second engagement prongs are sized and positioned to extend into the first and second tool engagement indentations of the second implant structure so as to allow the first tool to engage the intervertebral expandable implant; and*

As discussed above with respect to claim [1.10], it would have been obvious to a PHOSITA to combine/use the tool of Allen to position the first and second engagement prongs of Allen into the first and second tool engagement indentations of the second implant structure of Chung in combination with McLuen to insert the intervertebral expandable implant into the disk space between adjacent vertebrae.

EX1003 at ¶ 150.

> [21.6] *a second adjusting tool having a second proximal end and a second distal end with a handle positioned at the second proximal end, a screw engagement portion positioned at the second distal end, and a shaft extending from the handle to the screw engagement portion, wherein the screw engagement portion is sized and configured for engaging and turning the adjusting screw when the screw engagement portion is engaged with the adjusting screw, wherein the shaft of the second adjusting tool is sized with a smaller diameter than that of the adjusting tool passage such that the second adjusting tool can extend through the adjusting tool passage of the first tool to engage and turn the adjusting screw of the intervertebral expandable implant to expand the intervertebral expandable implant when the first and second engagement prongs of the first tool are engaged with the first and second tool engagement indentations of the intervertebral expandable implant.*

As discussed above with respect to claim [1.11], it would have been obvious to a PHOSITA to combine/use the first tool of Allen to position the first and second engagement prongs of Allen into the first and second tool engagement indentations of the second implant structure of Chung in combination with McLuen to insert the intervertebral expandable implant into the disk space between adjacent vertebrae. Then, using the second adjusting tool of Allen to pass through a cannula in a first tool to drive the adjusting screw to expand the implant of Chung. EX1003 at ¶ 151.

> *22. The system of claim 21, wherein the adjusting screw has a threaded shaft, wherein the second implant structure defines a screw hole, wherein the threaded shaft of the adjusting screw is positioned in the screw hole of the second implant structure, wherein the first implant*

> *structure defines a space that is larger than a diameter of the threaded shaft of the adjusting screw so as to allow the first implant structure to move with respect to the adjusting screw along a direction normal to the first vertebral body engagement surface when the intervertebral expandable implant is expanded, and wherein rotation of the adjusting screw with respect to the second implant structure moves the second implant structure with respect to the first implant structure to slide the first angled wedge portion with respect to the second angled wedge portion and expand the intervertebral expandable implant.*

As discussed in claims [1.8-1.9], 7 and 8, Chung discloses a threaded adjusting screw (50) wherein rotation of the adjusting screw (50) moves the second implant structure (40 and 20) with respect to the first implant structure (30 and 10) to slide the first angle wedge portion (13) with respect to the second angled wedge portion, resulting in the first implant structure (30 and 10) moving in a direction normal to the first vertebral body engagement surface. EX1003 at ¶ 152.

Chung further discloses that adjusting screw (50) is fastened to screw hole (41) of opposing wedge (40) (located in the second implant structure (40 and 20)) and to screw hole (31) located in the first implant structure (30 and 10) in order to adjust the distance between the opposing wedge (40) and lead wedge (30), to adjust the distance between the first implant structure (30 and 10) and the second implant structure (40 and 20). EX1033 at 6 (¶ 4). A PHOSITA would have understood that the first implant structure (30 and 10) defines a space (screw hole (31)) which has a length and at least a portion of its diameter (i.e. major internal thread diameter) that are larger than the diameter of the adjusting screw (50). Id. at FIGs. 3, 4. Further,

the area under the arch of the first implant structure defines an open space that is larger than a diameter of the threaded shaft and allows the first implant structure to move with respect to the adjusting screw. EX1003 at ¶ 152.

Figure 3

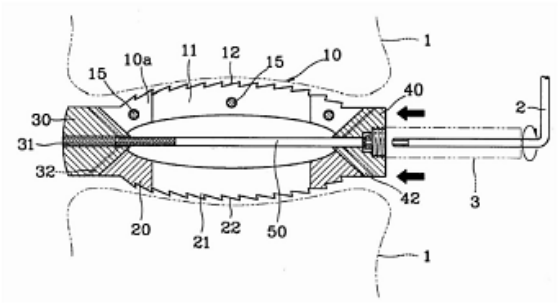

Figure 4

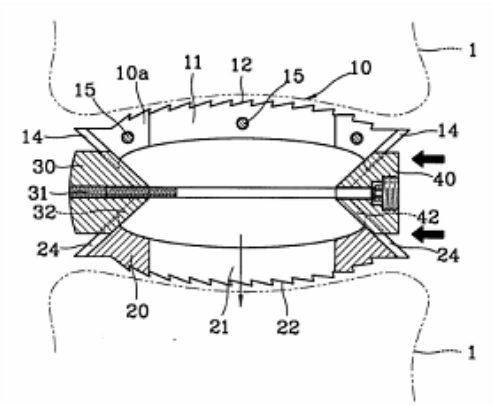

23. The system of claim 21, wherein a threaded shaft of the adjusting screw is threaded around an exterior circumference of the threaded shaft.

Chung discloses a threaded shaft of the adjusting screw (50) is threaded around an exterior circumference of the threaded shaft. *See, e.g.,* EX1033 at Fig 2; EX1003 at ¶ 153.

도면 2

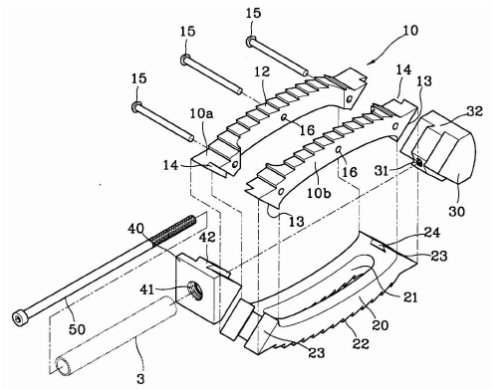

24. The system of claim 21, wherein a threaded shaft of the adjusting screw is threaded along substantially a full length of the threaded shaft.

Chung discloses a threaded shaft of the adjusting screw (50) is threaded around an exterior circumference of the threaded shaft. *See, e.g.,* EX1033 at Fig 2. A PHOSITA would have understood that Chung does not disclose the dimensions of the implant components nor does it specify the extent to which adjusting screw (50) is threaded. EX1003 at ¶ 154.

Allen discloses an intervertebral expandable implant (20) with internally threaded nut assemblies (70) threaded onto a core member (50) which has left and right-hand threads ("oppositely wound") on each half of its length. EX1031 at 4:28-49; FIG. 11. The nut assemblies (70) engage crown members (vertebral body engagement surfaces) (90) via dovetail joints (74, 76, 92, 94) along angled wedge portions (e.g. 74). EX1031 at 4:50-58; FIGs. 8, 10A, 10B. As the core member (50) is rotated using a tool (102) that engages a terminus defining a hex configuration,

the nut assemblies (70) retract into the housing, forcing crown members (90) outward, causing teeth (98) to penetrate vertebral bodies (4). EX1031 at 5:18-31; FIGs. 11-13; *Id.* at ¶ 155.

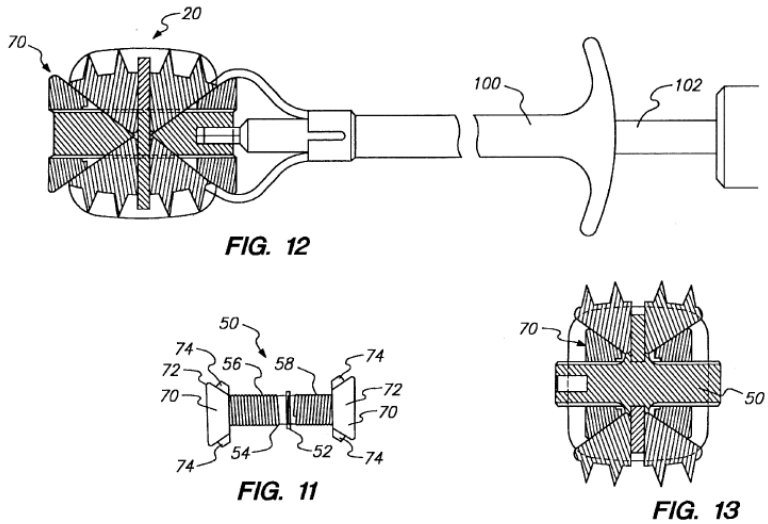

A PHOSITA would have understood that the implant disclosed by Chung could be modified by using the screw configuration disclosed by Allen. This would have the advantage of doubling the distance of expansion of the implant for the same amount of travel of wedge (30) on the screw, thereby doubling the potential expansion of the implant. *Id.* at ¶ 156.

Therefore, a PHOSITA would have been motivated to combine the teachings of Chung in combination with Allen. The combination, using known methods, would yield the predictable result of increasing implant expansion. A PHOSITA would have also understood that this combination would yield a core member (50)

threaded substantially along its full length. *Id.*

> *25. The system of claim 21, wherein the second implant structure defines a first hole having a first centerline axis, wherein the first screw guide has a second centerline axis that is angled with respect to the first centerline axis so as to guide a first screw into one of the superior and inferior vertebral bodies, and wherein the second screw guide has a third centerline axis that is angled with respect to both of the first and second centerline axes so as to guide a second screw into the other of the superior and inferior vertebral bodies.*

Chung discloses an adjusting screw hole (41) that defines a first centerline axis. *See, e.g.,* EX1033 at 6 (¶¶ 2-3); FIGs 1 and 2; Claim 1. EX1003 at ¶ 157.

Sutcliffe discloses a lower part (3) is unitarily formed with a pair of eyes (6) having collars (7) defining holes or passages (8) with cylindrical inner surfaces (12) extending at an acute angle of between 25º and 65º to the lower vertebral surface (10). Cortical screws (9) extend through these eyes (6) and into the lower vertebra (2) to solidly anchor the lower part (3) to the inferior vertebra (2). FIG. 6 shows how a similar pair of eyes (6) can be formed on the upper end part (4) to anchor it to the superior vertebra. EX1032 at [0024]; FIG. 6. One or more through going holes (13) are present in upper and lower parts (3) and (4). *Id.* at [0023]; FIG. 6; EX1003 at ¶ 158. A PHOSITA would have understood that the collars (7) define holes or passages (8) that serve as screw guides and constrain the position and direction of screws (9) passing into the superior and inferior intervertebral bodies. EX1003 at ¶ 158

A PHOSITA would have understood that the adjusting screw hole of Chung would define a first centerline axis of the resulting combined implant. The axes of the upper and lower collars would therefore define first and second screw guides with centerline axes at mutual angles to each other and to the first centerline axis. EX1003at ¶ 159.

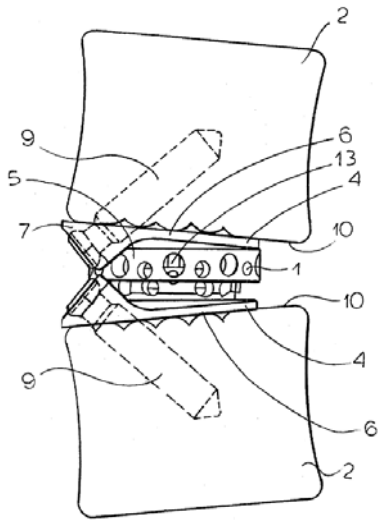

FIG.6

Therefore, a PHOSITA would have understood that Chung in combination with Sutcliffe provides a first screw guide that has a second centerline axis that is angled with respect to the first centerline axis so as to guide a first screw into one of the superior and inferior vertebral bodies and a second screw guide that has a third centerline axis that is angled with respect to both of the first and second centerline axes so as to guide a second screw into the other of the superior and inferior vertebral bodies. *Id.* at ¶ 160.

> *26. A method of using the system of claim 21 to insert the intervertebral expandable implant into a disc space of a spine from an anterior or lateral path, the method comprising:*
>
> *connecting the first tool to the intervertebral expandable implant with the first and second engagement prongs engaged with the first and second tool engagement indentations;*
>
> *implanting the intervertebral expandable implant into the disc space via the first tool;*
>
> *extending the second adjusting tool through the first tool to engage the adjusting screw of the intervertebral expandable implant; and*
>
> *expanding the intervertebral expandable implant by turning the second adjusting tool to turn the adjusting screw of the intervertebral expandable implant.*

As discussed above with respect to claim [1.10-1.11], it would have been obvious to a PHOSITA to combine/use the first tool of Allen to position the first and second engagement prongs of Allen into the first and second tool engagement indentations of the second implant structure of Chung in combination with McLuen to insert the intervertebral expandable implant into the disk space between adjacent vertebrae. Then, using the second adjusting tool of Allen to pass through a cannula in a first tool to turn the adjusting screw to expand the implant of Chung. EX1003 at ¶ 161.

도면 2

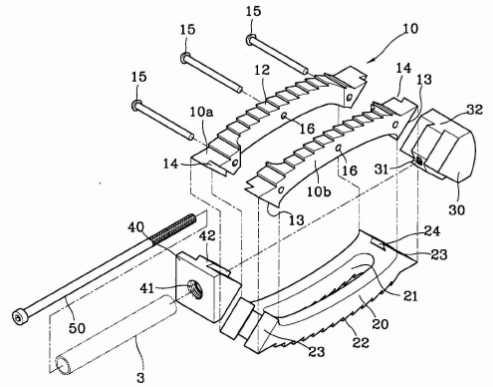

도면 4

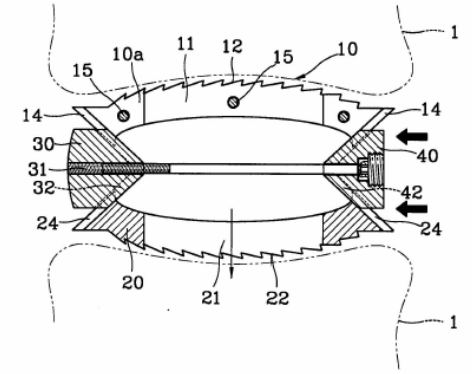

Sutcliffe discloses an intervertebral expandable implant (1). EX1032 at [0022]. Sutcliffe discloses a lower part (3) is unitarily formed with a pair of eyes (6) having collars (7) defining holes or passages (8) with cylindrical inner surfaces (12) extending at an acute angle of between 25º and 65º to the lower vertebral surface (10). Cortical screws (9) extend through these eyes (6) and into the lower vertebra (2) to solidly anchor the lower part (3) to the inferior vertebra (2). FIG. 6 shows how a similar pair of eyes (6) can be formed on the upper end part (4) to anchor it to the superior vertebra. EX1032 at [0024]; FIG. 6. One or more through holes (13) are present in upper and lower parts (3) and (4). *Id.* at [0023]; FIG. 6. Sutcliffe also discloses that the upper part (4) has a pair of bent-up tabs or flanges (11) formed with openings (16) extending parallel to an upper vertebral surface (10). Cortical screws (9) extend through the openings 16 to anchor the upper part (4) to the upper vertebra (2). EX1032 at [0025]; EX1003 at ¶ 162.

Sutcliffe discloses anterior placement of the implant. EX1032 at [0026];

FIGs. 3-6; EX1003 at ¶ 162.

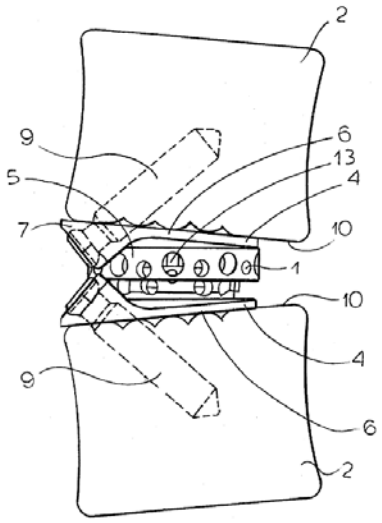

FIG.6

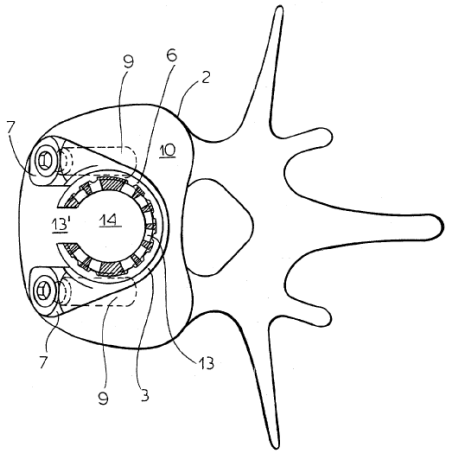

FIG.3

Chung does not expressly disclose an intended surgical approach. A PHOSITA would have understood that the implant disclosed by Chung could be adapted for use in an anterior or lateral approach by modifying the aspect ratio and dimensions of the implant to optimize it for the surgical approach. EX1003 at ¶ 163.

A PHOSITA would have further understood that the use of integrated plates and screws disclosed in Sutcliffe would be typically used in conjunction with a lateral or anterior approach for an intervertebral fusion device and could be readily combined with the device disclosed by Chung to provide enhanced primary stability. A PHOSITA would have further understood that the form factor and size of the combined implant could be adapted for use in either an anterior or lateral application, which would be a simple design choice that would yield a predictable result. *Id.* at

¶ 164.

XI. THIS PETITION SHOULD NOT BE DISCRETIONARILY DENIED

Patent Owner may argue that this Petition should be discretionarily denied under 35 U.S.C. § 314(a) in view of the Pending Litigation, based on *NHK Spring*[5] and its progeny. Any such argument by Patent Owner should be rejected for several reasons.

First, Lex Machina reports that the median number of days to trial in the EDPA for patent cases is 867 days. The Pending Litigation however involves eight asserted patents, one hundred and thirty-one asserted claims and twenty three accused products. The Pending Litigation needs to go through full fact discovery, Markman, expert discovery, summary judgment and trial. This will require significantly more than the median of 867 days, to address the number of claims and products, not to mention the Pending Litigation enters the queue behind all other cases that are on Judge Goldberg's docket, even those subsequently filed, and at a time when many cases are delayed because of COVID-19. The expectation is for a trial date in 2022/2023.[6]

Second, the most likely scenario is that a final decision will issue before and

---

[5] *NHK Spring Co. v. Intri-Plex Techs., Inc.,* IPR2018-00752, Paper 8 (PTAB Sept. 12, 2018).

[6] Globus intends on filing a Motion for Stay in the Pending Litigation.

perhaps well before trial in the EDPA. Any appeal of a final decision would at best overlap with any appeal of the District Court decision. The Federal Circuit may consolidate such appeals, and enable the decision of this Board to impact the final outcome of the District Court case. Either way, any remand from appeal to the EDPA would delay the conclusion of the District Court action by years.

Third, Congressional intent militates against discretionary denial. Through 35 U.S.C. § 315(b), Congress established a one-year bar to file a petition for inter parties review after service of a complaint. In so doing, Congress was intending to "afford defendants a reasonable opportunity to identify and understand the patent claims that are relevant to the litigation." 157 Cong. Rec. S5429 (daily ed. Sept. 8, 2011). Indeed, as is the case here, "[h]igh-technology companies . . . are often sued by [patent owners] asserting multiple patents with large numbers of vague claims, making it difficult to determine in the first few months of the litigation which claims will be relevant and how those claims are alleged to read on the defendant's products." Id. Thus, it would be unfair—and in clear contravention of legislative intent—to refuse Petitioner access to the efficiencies intended through this forum.

XII. CONCLUSION

Petitioner has demonstrated in this Petition that the Challenged Claims are unpatentable. Petitioner, therefore, respectfully requests institution of an IPR of the '268 patent.

Dated: July 20, 2020

By: / George D. Moustakas /

George D. Moustakas, Reg. No. 44,425
(gdmoustakas@hdp.com)
David P. Utykanski, Reg. No. 39,052
(dutykanski@hdp.com)
Harness, Dickey & Pierce, PLC
5445 Corporate Dr., Suite 200
Troy, MI 48098
Telephone: (248) 641-1600
Facsimile: (248) 641-0270

Attorneys for Petitioner,
Globus Medical, Inc.

CERTIFICATE OF COMPLIANCE

The undersigned hereby certifies that this Petition complies with the word count limitations of 37 CFR § 42.24. This brief contains less than 14,000 words, permitted under 37 C.F.R. § 42.24(a)(1)(i). In accordance with 37 C.F.R. 42.24(a), this word count does not include table of contents, table of authorities, mandatory notices under §42.8, certificate of service or word count, or appendix of exhibits or claim listing.

Petitioner relies on the word count feature of the word-processing system used to prepare this paper.

By: / George D. Moustakas /

George D. Moustakas, Reg. No. 44,425
(gdmoustakas@hdp.com)
David P. Utykanski, Reg. No. 39,052
(dutykanski@hdp.com)
Harness, Dickey & Pierce, PLC
5445 Corporate Dr., Suite 200
Troy, MI 48098
Telephone: (248) 641-1600
Facsimile: (248) 641-0270

Attorneys for Petitioner,
Globus Medical, Inc.

CERTIFICATE OF SERVICE

Pursuant to 37 C.F.R. §§42.6(e) and 42.105, this is to certify that I caused a true, correct and complete copy of the PETITION FOR INTER PARTES REVIEW OF U.S. PATENT NO. 10,307, 268 PURSUANT TO 35 U.S.C. §§ 311–319 AND 37 C.F.R. § 42 and related documents to be served via electronic mail and FedEx, next day delivery, on the Patent Owner, on this 20th day of July, 2020:

Fish & Richardson, P.C.
P. O. Box 1022
Minneapolis, MN 55440-1022

By: / George D. Moustakas /

George D. Moustakas, Reg. No. 44,425
(gdmoustakas@hdp.com)
David P. Utykanski, Reg. No. 39,052
(dutykanski@hdp.com)
Harness, Dickey & Pierce, PLC
5445 Corporate Dr., Suite 200
Troy, MI 48098
Telephone: (248) 641-1600
Facsimile: (248) 641-0270

Attorneys for Petitioner,
Globus Medical, Inc.