Trials@uspto.gov
571-272-7822

Paper 15
Date: December 6, 2021

UNITED STATES PATENT AND TRADEMARK OFFICE

BEFORE THE PATENT TRIAL AND APPEAL BOARD

ALCON INC., ALCON LENSX, INC., ALCON VISION, LLC, ALCON LABORATORIES, INC., and ALCON RESEARCH, LLC,
Petitioner,

v.

AMO DEVELOPMENT, LLC,
Patent Owner.

IPR2021-00849
Patent 10,709,548 B2

Before SHERIDAN K. SNEDDEN, JON B. TORNQUIST, and RYAN H. FLAX, *Administrative Patent Judges.*

TORNQUIST, *Administrative Patent Judge*.

DECISION
Granting Institution of *Inter Partes* Review
35 U.S.C. § 314

I. INTRODUCTION

A. Background and Summary

Alcon Inc., Alcon LenSx, Inc., Alcon Vision, LLC, Alcon Laboratories, Inc., and Alcon Research, LLC (collectively "Petitioner") filed a Petition (Paper 1, "Pet.") requesting an *inter partes* review of claims 1–14 of U.S. Patent No. 10,709,548 B2 (Ex. 1013, "the '548 patent"). AMO Development, LLC ("Patent Owner") filed a Preliminary Response to the Petition. Paper 10 ("Prelim. Resp."). With authorization, Petitioner subsequently filed a Reply (Paper 12, "Reply") and Patent Owner filed a Sur-Reply (Paper 14, "Sur-Reply").

We have authority to determine whether to institute an *inter partes* review. 35 U.S.C. § 314; 37 C.F.R. § 42.4(a). The standard for institution is set forth in 35 U.S.C. § 314(a), which provides that an *inter partes* review may not be instituted "unless the Director determines . . . there is a reasonable likelihood that the petitioner would prevail with respect to at least 1 of the claims challenged in the petition."

After considering the parties' arguments and evidence, and for the reasons set forth below, we determine that Petitioner has demonstrated a reasonable likelihood of prevailing with respect to at least one challenged claim of the '548 patent. Accordingly, we institute an *inter partes* review of claims 1–14 of the '548 patent. *See SAS Inst., Inc. v. Iancu*, 138 S. Ct. 1348, 1359–60 (2018).

B. Real Parties-in-Interest

Petitioner identifies Alcon Inc., Alcon Vision, LLC, Alcon Laboratories, Inc., and Alcon Research, LLC as the real parties-in-interest, noting that after the Petition was filed "Alcon LenSx, Inc. merged into Alcon Research, LLC, with Alcon Research LLC the surviving entity."

Paper 3, 1; Pet. 3. Patent Owner identifies itself and Johnson & Johnson Surgical Vision, Inc., AMO Manufacturing USA, LLC, and AMO Sales and Services, Inc., as the real parties-in-interest. Paper 5, 1.

C. Related Matters

The parties note that the ’548 patent is asserted in *AMO Development, LLC et al. v. Alcon LenSx, Inc. et al.*, No. 1:20-cv-00842-CFC (D. Del). Pet. 3; Paper 5, 1. *Inter Partes* review petitions were also filed by Petitioner against related patents in IPR2021-00843, -00845, and -00846. Paper 3, 1; Pet. 3.

D. The ’548 Patent

The ’548 patent is directed to a scanning system that may be used to form both a cataract incision and relaxation incisions in the cornea or limbus of a patient’s eye. Ex. 1013, Abstr.

The ’548 patent notes that many cataract patients are astigmatic, which can occur when the cornea has a different curvature in one direction than another. *Id.* at 1:41–43. To correct such astigmatism, the ’548 patent discloses applying a corneal relaxing incision using 3-dimensional patterned laser cutting, and notes that “[a] wavefront sensor, interferometer, surface profiler, or other such device may be used to yield prescriptions for correcting the astigmatism” in an eye. *Id.* at 2:55–58, 3:1–4.

The ’548 patent also notes that cataract incisions may be made using the disclosed system. *Id.* at 13:57–65. Such incisions may include “a bevel feature” which “may be useful for wound healing, sealing, or locking.” *Id.* at 13:62–64.

Figure 1 of the ’548 patent is reproduced below:

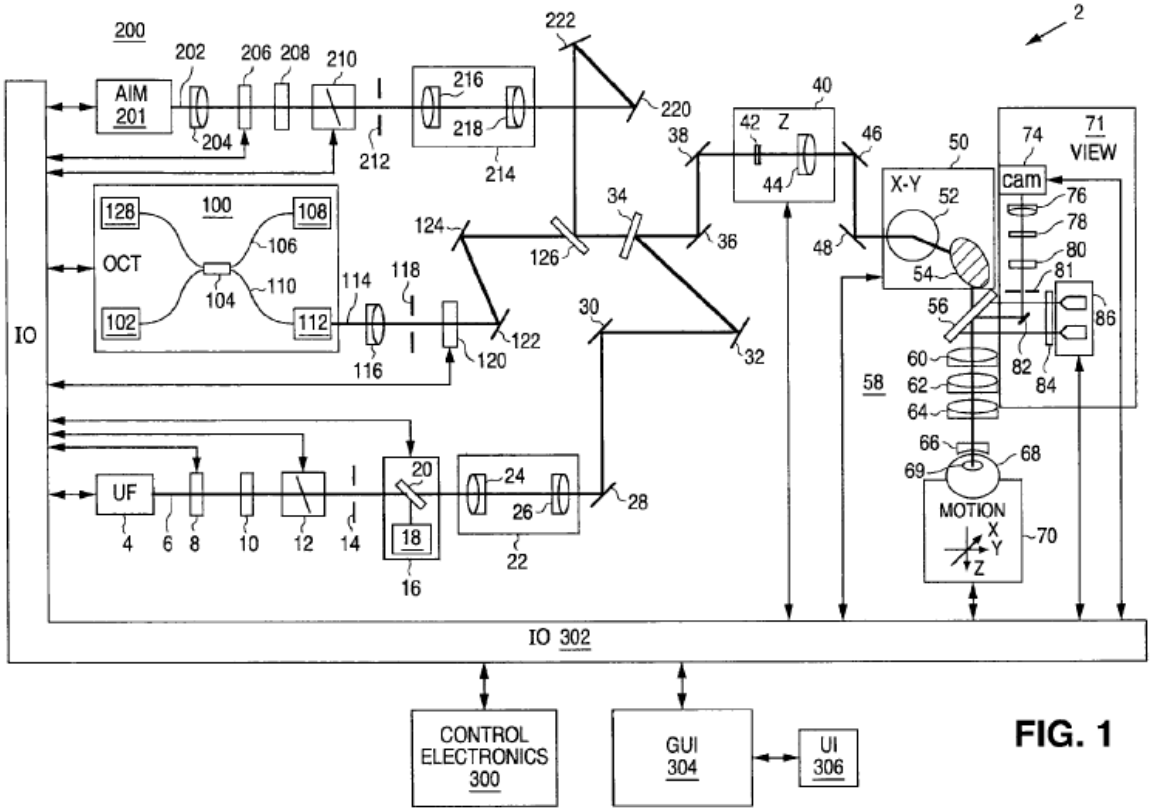

FIG. 1

Figure 1 is a schematic diagram of the optical beam scanning system of the ’548 patent. *Id.* at 2:30–31. As shown in Figure 1, control electronics 300 (or “controller 300”) control laser 4 via input/output device IO 302. *Id.* at 4:5–10. The ’548 patent explains that graphical user interface GUI 304 may be used to set operating parameters, process user input UI 306, and display gathered information such as images of ocular structures. *Id.* at 4:10–13.

In operation, UF light beam 6 passes through half-wave plate 8 and linear polarizer 10 as it proceeds towards the patient’s eye 68. *Id.* at 4:14–16. After interacting with several elements, light beam 6 reflects off of fold mirrors 28, 30, and 32, which serve to align light beam 6. *Id.* at 4:53–57. Optical Coherence Tomography (OCT) beam 114 is collimated using lens 116 and is combined with UF light beam 6 at beamcombiner 34. *Id.* at 6:41–65. In this way, OCT beam 114 follows the same path as UF beam 6

throughout the rest of the system and is "indicative of the location of UF beam 6." *Id.* at 6:64–7:3. Aim beam 202 is generated by aim beam light source 201 and assists the user in directing the UF laser's focus. *Id.* at 7:39–47.

E. Illustrative Claims

Petitioner challenges claims 1–14 of the '548 patent. Pet. 7. Of these challenged claims, claim 1 is the only independent claim and is reproduced below:

> 1. A scanning system for treating target tissue in a patient's eye, comprising:
>
> a) an ultrafast laser source configured to deliver a laser beam comprising a plurality of laser pulses;
>
> b) an Optical Coherence Tomography (OCT) device configured to generate signals which may be used to create an image of the cornea and limbus of the eye of the patient;
>
> c) a scanner configured to focus and direct the laser beam in a pattern within the cornea or limbus to create incisions therein; and
>
> d) a controller operatively coupled to the laser source and scanner programmed to determine a treatment pattern based upon the signals from the OCT device, the treatment pattern forming a cataract incision in the cornea that provides access for lens removal instrumentation to a crystalline lens of the patient's eye and one or more relaxation incisions in the cornea or limbus, wherein the cataract incision has an arcuate extent of less than 360 degrees in a top view, wherein the cataract incision includes a bevel shape in a cross-sectional view, the bevel shape including a first segment and a second segment which intersect each other at an angle, the cataract incision being entirely located in the cornea and intersecting both an anterior surface and a posterior surface of the cornea, and to control the scanner to scan the position of the laser beam in the treatment pattern.

Ex. 1013, 14:29–56.

F. Prior Art and Asserted Grounds

Petitioner asserts that claims 1–14 would have been unpatentable on the following grounds (Pet. 7):

Claims Challenged	35 U.S.C. §[1]	Reference(s)/Basis
1–14	103	Blumenkranz[2], Weikert[3], Kurtz[4]
Alternative: 3	103	Blumenkranz, Weikert, Kurtz, Benedikt[5]
1–5, 8–12	103	Swinger[6], Weikert, Benedikt, Kurtz
6, 7	103	Swinger, Weikert, Benedikt, Kurtz, L'Esperance[7]
13, 14	103	Swinger, Weikert, Benedikt, Kurtz, Huber[8]

[1] The Leahy-Smith America Invents Act ("AIA"), Pub. L. No. 112-29, 125 Stat. 284, 287–88 (2011), amended 35 U.S.C. §§ 102 and 103, effective March 16, 2013. Because the '548 patent is a divisional application from US App. No. 13/569,103, filed August 7, 2012, we understand that the pre-AIA version of these statutes apply. *See* 35 U.S.C. § 100(i)(2); Ex. 1013, codes (22), (62).

[2] US Patent Publication No. 2006/0195076 A1, published August 31, 2006. Ex. 1017 ("Blumenkranz").

[3] Mitchell P. Weikert and Douglas D. Koch, *Refractive Keratotomy: Does It Have a Future Role in Refractive Surgery?*, Cataract and Refractive Surgery (2005). Ex. 1019 ("Weikert"); *see* Ex. 1001 ¶ 73.

[4] US Patent Publication No. US2008/0058777 A1, published March 6, 2008. Ex. 1018 ("Kurtz").

[5] US Patent Publication No. US 2004/0066489 A1, published April 8, 2004. Ex. 1020 ("Benedikt").

[6] US 6,325,792 B1, issued December 4, 2001. Ex. 1021 ("Swinger").

[7] US 4,538,608, issued September 3, 1985. Ex. 1022 ("L'Esperance").

[8] Huber, et. al., *High-speed-frequency swept light source for Fourier domain OCT at 20-kHz A-scan rate*, Proceedings of SPIE, 2005. Ex. 1023 ("Huber").

In support of its grounds for unpatentability, Petitioner relies upon the declaration of Holger Lubatschowski, Ph.D. (Ex. 1001). In support of its positions, Patent Owner relies on the declarations of Jin U. Kang, Ph.D. (Ex. 2002) and Kathryn M. Hatch, M.D. (Ex. 2004).

II. ANALYSIS

A. Level of Ordinary Skill in the Art

In determining the level of skill in the art, we consider the type of problems encountered in the art, the prior art solutions to those problems, the rapidity with which innovations are made, the sophistication of the technology, and the educational level of active workers in the field. *Custom Accessories, Inc. v. Jeffrey-Allan Indus., Inc.*, 807 F.2d 955, 962 (Fed. Cir. 1986).

Petitioner contends one of ordinary skill in the art "would have had a Ph.D. in Physics, Biomedical Engineering, or a related science, such as Optical Engineering, or at least five years of experience in research, manufacturing, or designing medical optics or medical lasers." Pet. 26. According to Petitioner, "[i]n either case, a [person of ordinary skill in the art] would have also had a moderate understanding of ophthalmology, and refractive and cataract surgery." *Id.*

Patent Owner contends Petitioner's definition is mistaken in two respects. Prelim. Resp. 11–12. First, according to Patent Owner, a person of ordinary skill in the art "must include the expertise of someone with clinical experience in ophthalmology." *Id*. at 12. Second, a person of ordinary skill in the art need not have Ph.D. level training, as active workers in the field typically held Bachelor's degrees. *Id.* at 12–13. Given these modifications, Patent Owner would define the ordinarily skilled artisan as "an engineer with a Bachelor's degree in a laser-related engineering or optics field, with

some experience working with medical optics or lasers" and having experience working "with a clinician having experience in the field of ophthalmic surgery." *Id.* at 11 (citing Ex. 2002 ¶¶ 28–29). Conversely, Patent Owner contends the ordinarily skilled artisan could "include an ophthalmic surgeon with some experience working with medical optics or lasers" and experience working with an engineer or a graduate from a related field with "experience working with medical optics or lasers." *Id*. at 12.

For purposes of this Decision, we generally accept Petitioner's proposed definition of the person of ordinary skill in the art (or ordinarily skilled artisan), which appears to be consistent with the level of skill in the art reflected in the prior art of record and the disclosures of the '548 patent; however, we also agree with Patent Owner that such a definition should be flexible enough to include a person with a lesser academic degree and having experience working in the field, such as an engineer with clinical experience in ophthalmic surgery, as well as a medical doctor, such as an ophthalmic surgeon with experience working with medical optics and lasers. *See Okajima v. Bourdeau*, 261 F.3d 1350, 1355 (Fed. Cir. 2001) (noting that the appropriate level of ordinary skill in the art may be reflected in "the prior art itself") (quoting *Litton Indus. Prods., Inc. v. Solid State Sys. Corp*., 755 F.2d 158, 163 (Fed. Cir. 1985)).

Such an expanded definition of the person of ordinary skill in the art, including aspects of both parties' definitions, is appropriate based on our review of the record, which demonstrates individuals having a broad array of scientific degrees that collaborate as a team. We note, however, that our decision to institute trial in this proceeding would not change were we to adopt Patent Owner's proposed definition.

B. Claim Construction

In this proceeding, the claims of the ’548 patent are construed “using the same claim construction standard that would be used to construe the claim in a civil action under 35 U.S.C. [§] 282(b).” 37 C.F.R. § 42.100(b). Under that standard, the words of a claim are generally given their “ordinary and customary meaning,” which is the meaning the term would have had to a person of ordinary skill at the time of the invention, in the context of the entire patent including the specification. *Phillips v. AWH Corp.*, 415 F.3d 1303, 1312–13 (Fed. Cir. 2005) (en banc).

Both parties provide a construction of the term “cataract incision.” Pet. 7–9; Prelim. Resp. 17–18. Upon review of the parties’ arguments and supporting evidence, we determine that no claim terms require construction for purposes of this Decision. *See Nidec Motor Corp. v. Zhongshan Broad Ocean Motor Co.*, 868 F.3d 1013, 1017 (Fed. Cir. 2017) (quoting *Vivid Techs., Inc. v. Am. Sci. & Eng’g, Inc.*, 200 F.3d 795, 803 (Fed. Cir. 1999) (“[O]nly those terms need be construed that are in controversy, and only to the extent necessary to resolve the controversy.”)).

C. Prior Art Status of Weikert

The Petition asserts that Weikert is an article titled *Refractive Keratotomy: Does it Have a Future Role in Refractive Surgery?* that was published in 2005 “as Chapter 14 in CATARACT AND REFRACTIVE SURGERY” and is therefore prior art to the ’548 patent under 35 U.S.C. § 102(b). Pet. 5–6, 28. In support of the Petition, Dr. Lubatschowski testifies that the identified chapter of Weikert was part of “the 2005 edition” of “CATARACT AND REFRACTIVE SURGERY.” Ex. 1001 ¶ 73.

Patent Owner contends the Petition should be denied because Petitioner fails to demonstrate that Weikert was ever made publically

available. Prelim. Resp. 13. According to Patent Owner, all the Petition "does is attach a few undated pages that it claims are a book chapter," but offers "no other pages from the alleged book, no declarations attesting to publication, no proof that it was publically accessible—no evidence whatsoever." *Id.*

In its Reply, Petitioner provides a copy of the front cover of Weikert, as well as pages identifying the ISBN number, Library of Congress Control Number, and a 2005 copyright date for the reference. Reply 1; Ex. 1060, 1–5.[9] Petitioner also argues that it provided Patent Owner with the entire textbook—including copyright page—four days after filing the Petition as part of its invalidity contentions in the co-pending district court litigation. Reply 1.

In its Sur-Reply, Patent Owner argues that it is the petition that must provide evidence that a reference was publically accessible before the critical date of the challenged patent, and this information may not be supplied in a reply. Sur-Reply 1 (citing *Hulu, LLC v. Sound View Innovations, LLC*, IPR2018-01039, Paper 29 at 13 (Dec. 20, 2019)) (precedential). According to Patent Owner, "[Petitioner] cites *no decisions* where the Board instituted [an] IPR based on publication information submitted after the Petition. For good reason: the statute forbids it. That ends the matter." *Id.*

Patent Owner also asserts that Petitioner's actions in the co-pending district court action are irrelevant, as Petitioner must meet its substantive burden of proof on the prior art in this proceeding. *Id.* at 2–3.

---

[9] Here we reference the page numbers added in the bottom-right corner of the reference that were added by Petitioner.

A petition must "identify *with particularity* the grounds for institution and evidence supporting such grounds," including "the prior art relied upon and evidence that it qualifies as such." *Hulu*, Paper 29 at 13 (citing 35 U.S.C. § 312(a)). The Petition identifies the grounds for institution and the evidence supporting such grounds, and presents evidence that Weikert qualifies as prior art under 35 U.S.C. § 102(b). Pet. 5–6, 28–29. For example, Petitioner and Dr. Lubatschowski assert that CATARACT AND REFRACTIVE SURGERY "is a quarterly review series comprising chapters written by well-known specialists," and that Weikert was included in the 2005 edition of CATARACT AND REFRACTIVE SURGERY as Chapter 14: *Refractive Keratotomy: Does it Have a Future Role in Refractive Surgery*? Ex. 1001 ¶ 73. Although minimal, given the type of document involved, and in the absence of any reason to question Petitioner's and Dr. Lubatschowski's assertions, Petitioner's evidence is sufficient to present a reasonable likelihood that Weikert is prior art to the '548 patent under 35 U.S.C. § 102(b).

In addition, *Hulu* contemplates additional evidence being admitted in a reply to a patent owner preliminary response, as long as that evidence is responsive to the prior briefing. *Hulu*, Paper 29 at 14. In this case, Petitioner's evidence submitted in its Reply is responsive to arguments made in the Preliminary Response, and simply confirms what was asserted in the Petition and Dr. Lubatschowski's declaration, i.e., that Weikert is Chapter 14 of CATARACT AND REFRACTIVE SURGERY and the document bears a copyright date of 2005 (or, as asserted by Dr. Lubatschowski, is a "2005 edition"). Ex. 1060, 5, 12; Pet. 5–6, 28–29; Ex. 1001 ¶ 73. In addition, this evidence indicates that CATARACT AND REFRACTIVE SURGERY was issued by "Springer," which is a well-known publishing company, and is the type of

document that would be expected to be made publically accessible. *See* Ex. 1001 ¶ 71 (asserting that CATARACT AND REFRACTIVE SURGERY "is a quarterly review series comprising chapters written by well-known specialists"); Ex. 1019, 220, 224, 227, 228, 230, 232 (providing a "Summary for the Clinician" at the end of several sub-chapters); Ex. 1060, 4–5.

In the absence of evidence or argument suggesting that Weikert was not publically available, at this stage of the proceeding, we find the information presented in the Petition, as confirmed by the Reply evidence submitted by Petitioner, demonstrates a reasonable likelihood that Weikert is prior art to the '548 patent.

D. Claims 1–14 over Blumenkranz, Weikert, and Kurtz

Petitioner contends the subject matter of claims 1–14 would have been obvious over the combined disclosures of Blumenkranz, Weikert, and Kurtz. Pet. 29–43.

1. Blumenkranz

Blumenkranz is directed to a system and method for making incisions in eye tissue at different depths. Ex. 1017, Abstr. The primary disclosed use of the system of Blumenkranz is for cataract surgery, with the disclosed system providing "rapid and precise openings in the lens capsule and fragmentation of the lens nucleus and cortex . . . using 3-dimensional patterned laser cutting." *Id.* ¶¶ 3–11, 57, 69.

Figure 11 of Blumenkranz is reproduced below:

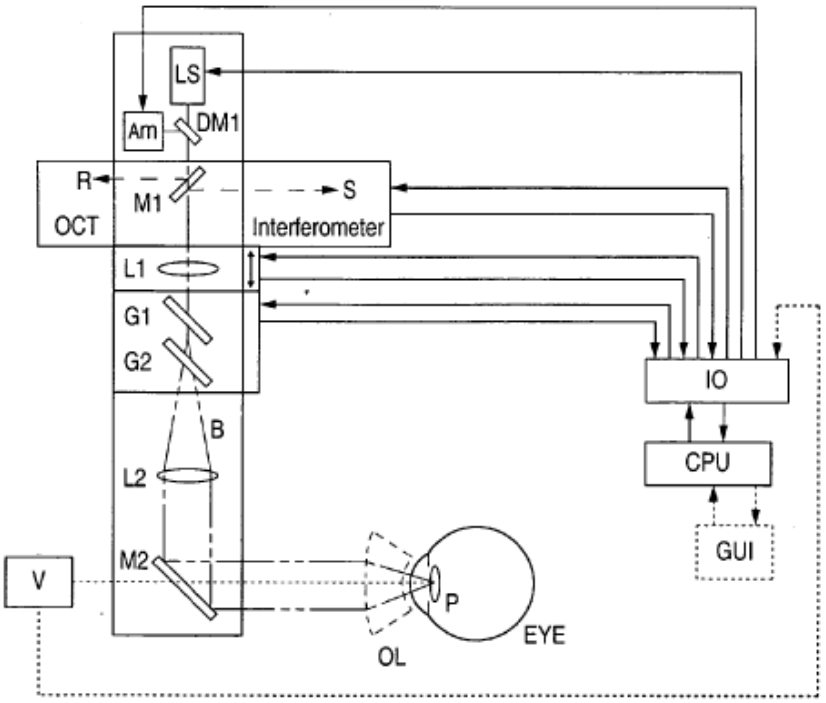

FIG. 11

Figure 11 is a plan diagram of one embodiment of Blumenkranz wherein the system projects or scans an optical beam into a patient's eye. *Id.* ¶ 34. Figure 12 shows laser source LS and aiming beam source AIM having outputs that are combined using mirror DM1. *Id.* ¶ 75. In this configuration, laser source LS may be used for both therapeutics and diagnostics. *Id.* Mirror M1 serves to provide both reference input R and sample input S to an OCT Interferometer, which provides images to graphical user interface GUI. *Id.* ¶¶ 75, 77. Cutting of ocular tissue is determined by scanning patterns that can be circular and spiral, with a vertical step similar to the length of the rupture zone. *Id.* ¶ 68.

Blumenkranz explains that although the primary discussion is of using the described system for capsulotomy and fragmenting the lens of the eye, the techniques described in the patent application "may be used to perform

new ophthalmic procedures or improve existing procedures, including anterior and posterior capsulotomy, lens fragmentation and softening, dissection of tissue in the posterior pole (floaters, membranes, retina), as well as incisions in other areas of the eye such as, but not limited to, the sclera and iris." *Id.* ¶ 71.

2. Kurtz

Kurtz discloses a system and method for resecting corneal tissue using a surgical laser. Ex. 1018, Abstr. In particular, Kurtz discloses a system and techniques for transplanting corneas. *Id.* ¶ 2.

Kurtz explains that traditional techniques used for performing penetrating keratoplasty involved using a full-thickness cylindrical cut in both the recipient and donor corneas to resect corneal tissue. *Id.* ¶ 4. The resected donor tissue is then grafted into the recipient cornea in the same operating room and within minutes of the resection. *Id.*

Kurtz explains that femtosecond surgical lasers were previously used to create full thickness corneal incisions, but such systems have the drawback of taking up "valuable space within the operating room." *Id.* ¶ 5. Given this drawback, Kurtz discloses that "[a]s an alternative, the femtosecond surgical laser could be placed in a surgical preparation room." *Id.* In that scenario, extreme care must be taken not to expose the internal tissues of the cornea to contaminants "during the process of transferring the recipient and the donor tissue to the operating room for completion of the procedure." *Id.*

To overcome these limitations, Kurtz discloses having the pulsed laser beam skip portions of the resection pattern, thereby leaving uncut gaps in the to-be-resected cornea. *Id.* ¶ 7. Kurtz explains that by leaving uncut gaps in the resection pattern, tissue along the incision and the internal chambers of

the eye remain protected and unexposed to environmental contaminants, allowing the patient to be moved between the preparation room and the operating room without exposing the patient to contamination risks. *Id.* ¶ 14. Once in the operating room, the uncut gaps may be incised by the surgeon using an alternate surgical instrument, preferably a bladed instrument. *Id.* ¶¶ 8, 15.

Figure 1E of Kurtz is reproduced below:

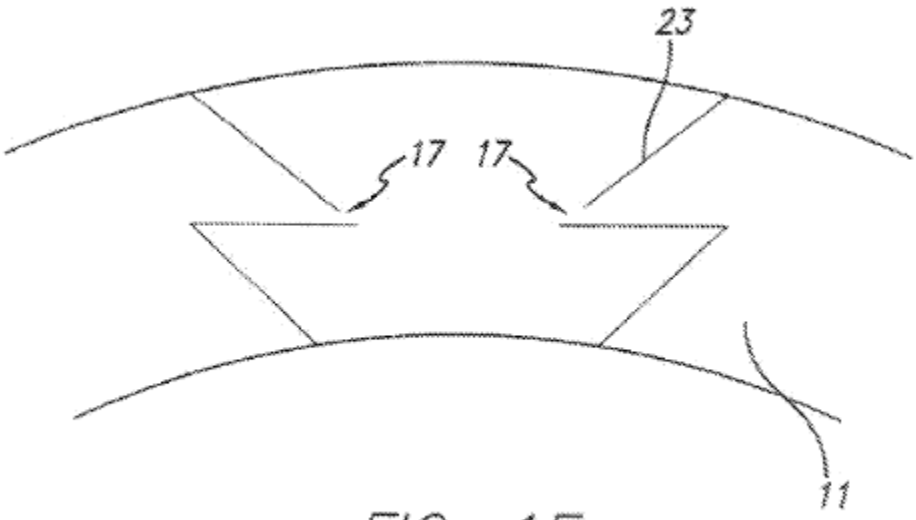

FIG. 1E

Figure 1E depicts a zig-zag resection pattern in the cornea of an eye. *Id.* ¶ 17. As shown in Figure 1E, the resection pattern may have a zig-zag pattern in profile and uncut gaps 17. Accordingly, the incisions of Kurtz, individually or in combination, do not fully penetrate the cornea. *Id.* ¶¶ 8, 17.

3. Weikert

Weikert reviews the history, use, and potential future of refractive keratotomy, which involves making incisions into the cornea of the eye,

often to correct astigmatism. Ex. 1019, 217.[10] Weikert explains that the first clinical use of keratotomy to correct refractive error occurred in 1885, where a penetrating limbal incision was used to decrease astigmatism following cataract surgery. *Id.* (section 14.2). Although by the late 1990s laser-based systems "had replaced refractive keratotmy as the dominant technique for the surgical correction of refractive error," Weikert notes that "incisional corneal surgery remains a useful tool in the surgeon's repertoire of refractive procedures." *Id.* at 218.

Weikert notes that clear corneal incisions (CCIs) "made during cataract surgery have been known to induce astigmatism by flattening the meridian on which the incision is centered." *Id.* at 227 (section 14.7.1). "The amount of this surgically induced astigmatism (SIA) varies with incision length and placement." *Id.* Weikert reports that one study comparing incision sizes of 3.2 mm, 4.0 mm, and 5.2 mm, found that the mean SIA was 0.09 D, 0.26 D, and 0.54 D, respectively. *Id.* In view of the various studies on the subject, Weikert reports that "0.0–0.5 D of SIA can be expected from temporal CCIs less than or equal to 3.2 mm." *Id.* at 228.

Weikert explains that one method of correcting the astigmatism caused by corneal incisions for cataract surgery was to provide "a similar incision placed opposite to the temporal CCI," with cataract surgery being performed only through one wound. *Id.* (section 14.7.2). Although such a procedure can reduce astigmatism, its "range is limited" and "carries [the] additional risk associated with the extra penetrating corneal wound." *Id.* To correct higher levels of astigmatism, Weikert reports that "[p]artial thickness, arcuate or transverse corneal incisions" may be used and that

[10] Our citations are to the original page numbers of the document.

"[a]rcuate incisions have been combined with cataract surgery to reduce pre-existing astigmatism." *Id.* at 228–229 (section 14.7.3).

In its conclusion, Weikert reports that "[a]s advances continue in the areas of intraocular lens design, crystalline lens removal and excimer laser refractive surgery, we are likely to see further decline in the use of refractive keratotomy." *Id.* at 232.

4. Analysis: Claim 1

Petitioner provides a detailed explanation as to where it contends each limitation of claim 1 is taught or suggested in Blumenkranz, Weikert, and Kurtz. With respect to the reason to combine these references, Petitioner contends that Blumenkranz "teaches a multifunctional laser ophthalmic surgery system fully capable of producing laser incisions of different depths according to various treatment patterns," but does not expressly disclose delivering a cataract incision or relaxation incisions. Pet. 29–30. Petitioner contends, however, that cataract incisions and partial relaxation incisions have been known for approximately 150 years, as discussed in Weikert, and "making a centuries-old type of incision using modern technology, such as a laser ophthalmic surgery system, would have been obvious." *Id.* at 30 (citing *Leapfrog Enters., Inc. v. Fisher-Price, Inc.*, 485 F.3d 1157, 1161 (Fed. Cir. 2007)).

Petitioner further contends that a known aspect of cataract surgery involves the selection of a particular incision shape and beveled incisions were a well-known, self-sealing incision shape that would have been an obvious choice for the cataract incisions of Weikert. *Id.* at 31 (citing Ex. 1001 ¶¶ 156–157). In support of Petitioner's arguments, Dr. Lubatschowski identifies multiple references that disclose the use of a beveled cataract incision in the cornea of an eye and explain the benefits of

this incision shape. Ex. 1001 ¶¶ 157 (citing Ex. 1050 (demonstrating that "the self-sealing capability of [a] clear corneal cataract incision is strongly dependent on the incision construction method" and that "a two-planed incision can extend the stable incision angle range"); Ex. 1042, 5 (discussing the use of temporal corneal beveled incisions); Ex. 1043, 1–2 (disclosing the use of beveled corneal incisions and noting that such incisions are "self-sealing and sutureless"); Ex. 1044, 1).

Patent Owner asserts that claim 1 would not have been obvious over Blumenkranz, Weikert, and Kurtz because these references fail to disclose every limitation of the claim and because one of ordinary skill in the art would not have sought to combine the disclosures in the manner set forth in the Petition. Prelim. Resp. 23–46. We address these arguments below.

a) A Scanner Configured to Focus and Direct the Laser Beam in a Pattern Within the Cornea or Limbus to Create Incisions Therein

Patent Owner contends Petitioner's arguments fail because the asserted references do not disclose focusing a laser beam within the cornea or limbus of an eye to create incisions. Prelim. Resp. 24. Patent Owner reasons that a person of ordinary skill in the art "would not have thought Blumenkranz's system for focusing and directing a laser *in the lens* also included focusing and directing a laser *in the cornea*," and Blumenkranz's vague reference to "other areas of the eye" lacks sufficient precision and detail to establish that the subject matter existed in the prior art. *Id.* at 24–25 (citing *Wasica Fin. GmbH v. Cont'l Auto. Sys., Inc.*, 853 F.3d 1272, 1284–85 (Fed. Cir. 2017)).

Petitioner presents evidence that Blumenkranz teaches or suggests making incisions in the lens, as well as "other areas of the eye such as, but

not limited to, the sclera and iris." Pet. 30 (citing Ex. 1017 ¶ 71). The question of whether one of ordinary skill in the art would have interpreted Blumenkranz's "other areas of the eye" disclosure to include the cornea is a material issue of fact that is best resolved on a complete trial record. As such, Patent Owner's arguments do not dissuade us from instituting trial.

b) Bevel-Shaped Cataract Incision

Claim 1 requires a cataract incision that

> has an arcuate extent of less than 360 degrees in a top view, wherein the cataract incision includes a bevel shape in a cross-sectional view, the bevel shape including a first segment and a second segment which intersect each other at an angle, the cataract incision being entirely located in the cornea and intersecting both an anterior surface and a posterior surface of the cornea . . . .

Ex. 1013, 14:47–56. Patent Owner contends that Blumenkranz, Weikert, and Kurtz do not disclose all of these claim limitations. Prelim. Resp. 26.

In particular, Patent Owner asserts that Blumenkranz does not disclose a cataract incision and Weikert "is silent as to the cross-sectional shape" of its manually-created cataract incisions. *Id*. According to Patent Owner, this leaves Kurtz as the only potential option to disclose the identified claim limitations. *Id.* at 27. Patent Owner contends, however, that Kurtz does not disclose the claimed cataract incision for three reasons. *Id.* at 27–31. First, Patent Owner asserts that Kurtz does not disclose a cataract incision that is less than 360 degrees in shape, disclosing instead large, round incisions that completely encircle the cornea. *Id.* at 27. Second, Patent Owner asserts the claims require a single, fully-penetrating incision and Kurtz intentionally leaves uncut gaps in its corneal incisions. *Id.* at 28 (citing Ex. 1018 ¶¶ 7–8, 13–14, 17, Abstr.). Third, Patent Owner asserts that Kurtz's partially-

penetrating corneal incisions do not allow access for lens removal instrumentation. *Id.* at 31.

Petitioner presents evidence that cataract incisions that are less than 360 degrees in shape and extend through the cornea to provide access for lens removal instrumentation were well known in the art (Weikert) and that beveled cataract incisions that fully penetrate the cornea were known to provide certain advantages, such as being self-sealing. Pet. 35–37 (citing Ex. 1019 (Weikert); Ex. 1001 ¶¶ 156–157 (discussing prior art disclosures of beveled cataract incisions), 444–445. The question of whether the well-known nature of beveled cataract incisions would have led one of ordinary skill in the art to apply such incisions using Blumenkranz system is a question of fact that is best resolved on a complete trial record.[11]

Patent Owner's arguments related to Kurtz are not persuasive because we understand Petitioner to rely upon Kurtz not for its specific 360-degree, beveled, partially-penetrating corneal transplant incisions, but to demonstrate that laser surgery devices were capable of making beveled incisions in a cornea. *See* Pet. 31 ("Kurtz expressly shows that laser ophthalmic-surgery systems can be used to deliver beveled incisions."), 37.

c) Laser-Applied Relaxation Incisions

Claim 1 requires a controller programmed to form one or more relaxation incisions by scanning a laser beam in a treatment pattern. Ex. 1013, 14:40–47. As noted above, Petitioner argues that Weikert discloses manually created relaxation incisions in the cornea and

[11] During trial the parties are encouraged to fully address whether beveled cataract incisions that are less than 360 degrees in circumference and fully penetrate the cornea were well known in the art and known to be advantageous, as asserted by Dr. Lubatchowski.

Blumenkranz teaches or suggests a laser-based surgery system for making incisions in the eye, including the cornea. Pet. 30–31. According to Petitioner, one of ordinary skill in the art would have sought to make Weikert's manual incisions using Blumenkranz's system because this merely represents the use of modern technology to conduct a procedure that has been handled manually since the late 1800's. *Id.* at 30–31, 35–36.

Patent Owner contends that neither Blumenkranz nor Weikert disclose this limitation as Weikert's incisions are made manually and Blumenkranz does not disclose making a relaxation incision using its laser-based system. Prelim. Resp. 32–33.

Although neither Weikert nor Blumenkranz individually disclose a laser-applied relaxation incision, Petitioner sufficiently explains for purposes of institution why Blumenkranz (laser surgery on the eye) and Weikert (manual relaxation incisions), when combined in the manner suggested in the Petition, teach or suggest this claim limitation. Thus, Patent Owner's arguments do not dissuade us from instituting trial.

d) Combination of Blumenkranz, Weikert, and Kurtz

Patent Owner contends Petitioner has failed to establish that one of ordinary skill in the art would have combined Blumenkranz, Weikert, and Kurtz to make the claimed incisions in the cornea. Prelim. Resp. 33.

(1) Prior Statements of Petitioner and its Declarant

Patent Owner contends the prior statements of Petitioner and its declarant demonstrate that a laser surgery device intended for surgery on the lens is not necessarily adaptable for surgery on the cornea. Prelim. Resp. 33–37. According to Patent Owner, the difficulty in modifying lens-based systems for surgery on the cornea, or vice-versa, was "repeatedly and

emphatically" stressed by Petitioner during prosecution of its own patents and by Dr. Lubatschowski in a 2013 publication. *Id.* at 34–35.

In support of its arguments, Patent Owner demonstrates that during prosecution of its own patents Petitioner represented that "[t]here are crucial differences between *lens* surgery and *corneal* surgery" and the dueling requirements for corneal and lens surgeries pose "considerable design challenges." Ex. 2007, 15:53–58; *see also* Ex. 2006, 25:27–31 ("Therefore, laser delivery systems which are intended to be used for both corneal and lens surgeries, need to cover a broad range of apertures and corresponding NA ranges. This requirement poses considerable design challenges.").

Likewise, in a 2013 update on femtosecond laser technologies in ophthalmology, Dr. Lubatschowski discussed the different goals and components of cataract and corneal surgery laser systems. Prelim. Resp. 36–37; Ex. 2009, 1210. In this publication, Dr. Lubatschowski notes that due to the high cost and large space requirements, "the question as to why a system designed for the cornea cannot be used for the lens and vice versa arises." Ex. 2009, 1209. Dr. Lubatschowski explains that the difficulty in adapting one type of system for use on different tissue types arises because the laser and optics necessary for the two types of systems are different. *Id.* at 1209–10 (noting that, because of the "different refractive indices" of the cornea, aqueous water, and lens, "significant aberrations of the laser beam" occur if the beam of a corneal laser surgery system is "moved deeper into the eye without additional corrections"). Providing a "look into the future," Dr. Lubatschowski speculates that gradual progress in "all-in-one systems (refractive and cataract)" can be expected, and in a different section he notes that "[t]here are now manufacturers that claim both

application areas for their system," although "there are no scientific study results on this yet." *Id.* at 1209, 1211.

The evidence set forth by Patent Owner presents significant issues of fact to be addressed at trial. On the one hand, it is evident that modifying cataract surgical systems for use on the cornea, or providing a system that is capable of performing both corneal and lens surgery, was extremely difficult. Ex. 2006, 5:33–36, 25:27–31; Ex. 2007, 8:32–39, 15:53–58; Ex. 2009, 1209–11. On the other hand, Blumenkranz specifically asserts that its system is useful for not only cataract surgery, but also surgery on other areas of the eye, including the sclera, and Dr. Lubatschowski testifies that the system of Blumenkranz is "well-suited to perform . . . anterior incisions to permit access to the inner eye chamber." Ex. 1017 ¶ 71; Ex. 1001 ¶¶ 107–108. Such evidence facially supports Petitioner's case for obviousness. Thus, considering this evidence as a whole, we are left with a material issue of fact as to the capabilities of the Blumenkranz system that is best resolved on a complete trial record, and after reviewing the cross-examination testimony of the parties' declarants.

(2) Forming a Bevel-Shaped Cataract Incision Using Blumenkranz's System

Patent Owner contends one of ordinary skill in the art would not have modified Blumenkranz to form bevel-shaped incisions in view of Kurtz because Kurtz's zig-zag incisions are designed to fit the donor cornea into the opening in the transplant incision and require sutures, which is the opposite of a "self-healing" incision. Prelim. Resp. 38–39. Patent Owner further contends that the concept of self-sealing incisions is only found in the '548 patent, the disclosure of which cannot be used for purposes of an obviousness inquiry. *Id.* at 39.

Contrary to Patent Owner's arguments, and as discussed above, we do not understand Petitioner to rely on Kurtz for its specific 360-degree, partially-penetrating, cataract incisions. Pet. 31, 37. Instead, we understand Petitioner to argue that one of ordinary skill in the art would have used a less-than-360-degree, beveled, corneal incision because this incision shape was well known in the art and understood to be "self-sealing." Pet. 31 (citing Ex. 1001 ¶¶ 157–159). And, contrary to Patent Owner's assertions, Dr. Lubachowski provides multiple references apart from the '548 patent that describe beveled corneal incisions as being "seal-sealing." Ex. 1001 ¶ 157 (citing Ex. 1050, 4–5; Ex. 1042, 5; Ex. 1043, 1). As such, Patent Owner's arguments do not dissuade us from instituting trial.

(3) 360-Degree Incisions and Access to the Lens

Patent Owner argues that Kurtz utilizes a full 360-degree incision in order to remove the entire cornea, which is "the exact opposite of the claimed invention," and therefore teaches away from making an incision that "has an arcuate extent of less than 360 degrees in a top view." Prelim. Resp. 42. Patent Owner further argues that Kurtz would not have motivated the creation of an incision to allow for access to the lens because corneal transplant incisions are not an acceptable way to provide access for lens removal instrumentation. *Id.* at 42–43.

As noted by Patent Owner, the incisions of Kurtz are 360-degree incisions that are used to remove the entire cornea and would have exposed the entire eye to the outside environment, risking loss of intraocular contents. *Id.* But we do not understand Petitioner to assert that one of ordinary skill in the art would have made Kurtz's specific incisions in the cornea of a patient during cataract surgery, but instead that this skilled artisan would have understood that the cataract incisions of Weikert could be

beveled (as known in the art) and applied using a laser based system (as confirmed by Kurtz). Pet. 30, 35–37. As such, Patent Owner's arguments do not dissuade us from instituting trial.

5. Conclusion With Respect to Claim 1

Upon review of the parties' arguments and submitted evidence, and for the reasons set forth above, Petitioner sufficiently identifies for purposes of institution where Blumenkranz, Weikert, and Kurtz, in combination with the knowledge of one of ordinary skill in the art, teach or suggest every limitation of claim 1. Petitioner also provides a sufficient explanation, supported by record evidence, as to why one of ordinary skill in the art would have combined the references to arrive at the subject matter of claim 1. Accordingly, Petitioner demonstrates a reasonable likelihood that claim 1 would have been obvious over Blumenkranz, Weikert, and Kurtz.

6. Dependent Claims 2–12

Petitioner presents evidence that dependent claims 2–12 would have also been obvious over the combined disclosures of Blumenkranz, Weikert, and Kurtz. Pet. 44–47.

Patent Owner does not address Petitioner's arguments with respect to these claims, apart from its arguments with respect to claim 1. Prelim. Resp. 23–46.

Upon review of the Parties' arguments and supporting evidence, and for the reasons set forth above, we determine that Petitioner demonstrates a reasonable likelihood that claims 2–12 would have been obvious over Blumenkranz, Weikert, and Kurtz.[12]

---

[12] As an alternative ground, Petitioner asserts that claim 3 would have been obvious over Blumenkranz, Weikert, Kurtz, and Benedikt. In view of our conclusion with respect to the combination of Blumenkranz, Weikert, and

E. Claims 1–5 and 8–12 over Swinger, Weikert, Benedikt, and Kurtz

Petitioner contends that the subject matter of claims 1–5 and 8–12 would have been obvious over the combined disclosures of Swinger, Weikert, Benedikt, and Kurtz. Pet. 47–60.

1. Swinger

Swinger discloses the use of low energy, ultra-short (femtosecond) pulsed laser radiation to ablate ocular tissue in a controlled fashion. Ex. 1021, Abstr. Swinger explains that the disclosed photodisruption process is gentle enough that it may be used for surgical procedures that were previously impossible using laser radiation, including "radial and arcuate keratotomy," "capsulectomy, capsulorhexis, and phacoablation." *Id.*

Kurtz, we need not address this alternative ground at this time. We will do so at trial, however, if necessary.

Figure 6 of Swinger is reproduced below:

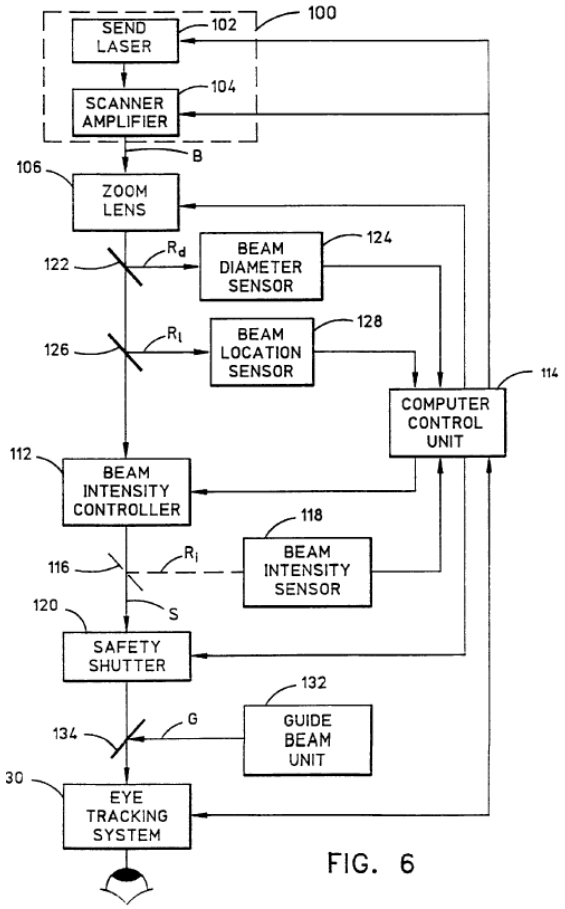

FIG. 6

Figure 6 is a block diagram of a preferred embodiment of the laser and control system of Swinger. *Id.* at 10:61–62, 17:1–30. As shown in Figure 6, laser unit 100 generates laser beam B. *Id.* at 17:1–2. Swinger explains that the preferred laser system includes a broad gain bandwidth laser using lasing ions such as titanium, chromium or neodymium and emitting at a preferred wavelength of 400 nm to 1900 nm, "which is generally transmissive in eye tissue." *Id.* at 8:43–48.

Zoom lens 106 provides control over the diameter of laser beam B. *Id.* at 17:21–24. Beam-splitting mirrors 122 and 126 reflect part of the beam energy to beam diameter sensor 124 and beam location sensor 128, respectively. *Id.* at 18:43–45, 19:30–33. Beam intensity controller 112 is

coupled to computer control unit 114, which is programmed to vary the intensity of surgical laser beam S, as necessary for a particular surgical procedure. *Id.* at 17:50–54. Safety shutter 120 is coupled to computer control unit 114 and is used to prevent unwanted or accidental laser radiation exposure of eye tissue. *Id.* at 18:10–24, 19:24–29. Guide beam unit 132 includes a low-power laser that provides a guide beam appropriate for direct viewing that is aligned with surgical laser beam S and acts as an indicator of the location of the treatment beam. *Id.* at 20:22–34.

Swinger discloses that its system "can easily create straight line and curved-line excisions, of any predetermined length and depth, at any location determined by a surgeon." *Id.* at 20:49–51. One use of this system is "for performing radial keratotomies or making T-cuts or arcuate cuts, to correct myopia, hyperopia, or astigmatism (regular or irregular)." *Id.* at 21:12–23. Swinger explains that these cuts may be made using various laser scanning patterns and that these cuts may completely penetrate the cornea or may be made within the cornea. *Id.* at 33:7–17.

Swinger explains that capsulorhexis surgery may also be performed using the disclosed system as follows. *Id.* at 34:30–51. First, the focus of the laser beam spot is localized to the anterior lens capsule "by direct visualization using a visual HeNe laser beam focused to the same focal point as the ablating laser." *Id.* at 34:52–55. "Then, the surgeon displaces the HeNe positioning beam just posteriorly to" the lens capsule and "photodisruption begins." *Id.* at 34:58–61. According to Swinger, "[t]he cutting process can be totally computerized once the reference point on the capsule has been fixed, or the surgeon can terminate the process when the capsule has been visibly cut for 360 degrees." *Id.* at 34:64–67.

2. Benedikt

Benedikt discloses an apparatus and method "for detecting the surface topometry of the cornea of the eye." Ex. 1020 ¶ 2. In one embodiment of Benedikt, both a Placido Topometer and OCT device are used to acquire images of various portions of the eye. *Id.* ¶¶ 14–15, 25. According to Benedikt, this combination leads to a "qualitatively novel and previously unachievable quantitative description of the eye in respect of diagnostics and therapeutics." *Id.* ¶ 46; *see also id.* ¶ 39 ("As a result of the combination of the methods, automated laser surgery is provided with a previously unattainable comprehensive topometrical/topographical illustration of the cornea . . . .").

3. Analysis: Claim 1

Petitioner contends that Swinger discloses a laser ophthalmic-surgery system intended for various surgical procedures on the cornea or lens of the eye and that one of ordinary skill in the art would have sought to use Swinger's system to deliver the relaxation and cataract incisions that are taught or suggested in both Swinger and Weikert. Pet. 47–48. Petitioner concedes that neither Swinger nor Weikert disclose a system with an OCT device configured to create an image of the cornea and limbus of the eye, but contends one of ordinary skill in the art would have sought to implement Benedikt's OCT device in the system of Swinger and Weikert in order to more accurately plan and effect laser surgery. *Id.* at 48–49. According to Petitioner, such a combination is merely the substitution of known imaging modalities to provide predictable results. *Id.* at 49.

Petitioner also contends that one of ordinary skill in the art would have known that selecting a particular incision shape is a routine part of

cataract surgery and that "beveled incisions were well-known, self-sealing incision shapes." *Id.* at 50 (citing Ex. 1001 ¶¶ 156–157).

Patent Owner contends the ground based on Swinger, Weikert, Benedikt, and Kurtz fails because (1) none of the references disclose a beveled-shaped cataract incision that has an arcuate extent of less than 360 degrees, (2) none of Petitioner's references disclose a controller programmed to use OCT imaging data to determine a treatment pattern, and (3) one of ordinary skill in the art would not have sought to combine the disclosures of Swinger, Weikert, Benedikt, and Kurtz. Prelim. Resp. 49–60. We address these arguments below.

a) Beveled-Shaped Cataract Incisions

Patent Owner contends that none of the references relied upon by Petitioner disclose a cataract incision that is less than 360 degrees in top view, has a beveled shape including two segments that intersect at an angle, and has two segments that intersect the anterior and posterior surfaces of the cornea. Prelim. Resp. 49–50 (asserting that both Kurtz and Swinger fail to disclose a beveled cataract incisions with all the required limitations of claim 1).

Petitioner presents evidence that: (1) cataract incisions that are less than 360 degrees in top view were known in the art (Pet. 54 (citing Ex. 1021, Figs. 8B, 15W, 21:12–24, 33:7–22; Ex. 1019, 2–3, 12, 13, 15–16)), (2) that beveled shaped cataract incisions with segments that intersect at an angle were known in the art (Ex. 1001 ¶ 156–157), and (3) that beveled incisions that intersect both the anterior and posterior surfaces of the cornea were known in the art (Pet. 55–56; Ex. 1001 ¶ 476). Patent Owner does not persuasively address this evidence or explain why Petitioner is incorrect in concluding that beveled shaped cataract incisions falling within the scope of

claim 1 were well known in the art and known to be advantageous. Accordingly, Patent Owner's arguments do not dissuade us from instituting trial.

b) A Controller Programmed to Determine a Treatment Pattern Based on OCT Data

Citing to paragraph 39 of Benedikt, among others, Petitioner contends Benedikt discloses a controller programmed to determine a treatment pattern based on OCT data. Pet. 49, 51 (citing Ex. 1020 ¶¶ 3, 4, 10, 14–16, 19, 39 42, 44).

Patent Owner contends Petitioner errs in relying on paragraph 39 of Benedikt as teaching or suggesting a controller programmed to use OCT imaging data because this paragraph relates to use of a topometer and wave front analyzer, not the combination of a topometer and OCT device. Prelim. Resp. 53.

On this record, we understand Benedikt to disclose the use of a topometer in combination with either a wave front analyzer or an OCT device to provide qualitative and quantitative descriptions of an eye, including the anterior and posterior surface of the cornea. Ex. 1020 ¶¶ 38–39, 42–44, 46. We also understand Benedikt to disclose that comprehensive illustrations of the cornea allow for the creation of an "optimal ablation pattern for the front surface of the cornea" and detachment of "the ablation process from the surgeon's manual dexterity." *Id.* ¶ 39. Thus, we are left with an issue of fact as to whether Benedikt teaches or suggests a controller programmed to use OCT imaging data (in combination with topometer data) to determine a treatment pattern that is best resolved on a complete trial record. *Id.* ¶¶ 39, 42–44, 46; Pet. 51–53, 55–57.

Patent Owner further contends that Petitioner's arguments are insufficient to support institution because Benedikt discloses ablation patterns, and not incision patterns. Prelim. Resp. 53–54. According to Patent Owner, an incision pattern cuts or slices tissue but leaves the tissue intact, whereas an ablation pattern removes portions of the targeted tissue to reshape that tissue. *Id.* at 54.

Although Benedikt discloses ablation patterns, we understand Petitioner's argument to be that Swinger discloses a controller programmed to generate an *incision pattern* and that one of ordinary skill in the art would have used Benedikt's imaging system to program the controller of Swinger to generate the incision patterns disclosed in Weikert. Pet. 49, 51 (citing Ex. 1019, 227 (Weikert discussing "cataract incisions" and "relaxing incisions"); Ex. 1021, 16:60–20:34; Ex. 1020 ¶¶ 31, 36, 42, 51; Ex. 1001 ¶ 406). Thus, Patent Owner's arguments related to the distinction between ablation patterns and incision patterns do not dissuade us from instituting trial.

c) Combination of Swinger, Benedikt, Weikert, and Kurtz

Patent Owner contends the prior art teaches away from implementing Benedikt's OCT imaging system in Swinger because Swinger uses direct visualization using a HeNe laser beam to manually identify target tissue and generate an incision pattern, which is the "opposite of the scanning system claimed in the '548 patent, which uses an OCT device." Prelim. Resp. 55–56.

As noted by Patent Owner, Swinger uses direct visualization for planning laser surgery and not OCT imaging. Ex. 1021, 34:58–61. We are directed to no teaching or suggestion in Swinger, however, to suggest that

other visualization methods should be avoided or are less effective. As such, on this record, Patent Owner has not explained sufficiently why the prior art of record teaches away from using Benedikt's OCT imaging methods in the combined system of Swinger and Weikert.

Patent Owner also argues that Swinger lacks a controller to determine a treatment pattern based on imaging data and Benedikt does not teach or suggest this limitation because it is an imaging system, not an imaging-guided laser system. Prelim. Resp. 58. According to Patent Owner, Weikert and Kurtz do not fill this gap because they do not use OCT for laser-guided applications. *Id.* at 59–60.

As noted above, on this record, Benedikt appears to suggest that OCT data could be used successfully in combination with topometry to automate laser surgery on the eye using a controller. Ex. 2020 ¶¶ 39, 43–44, 46; Pet. 51–53, 55–57. As such, Patent Owner's arguments present a disputed issue of fact that is best resolved on a complete trial record.

Finally, Patent Owner argues that Swinger does not disclose making the claimed cataract incisions, and nothing in Weikert or Kurtz teaches one of ordinary skill in the art to re-design a laser surgical system to make such incisions. Prelim. Resp. 60. On this point, both parties marshal evidence and arguments to address whether one of ordinary skill in the art would have used Swinger's system to create the claimed cataract incisions. Thus, we are presented with a disputed issue of fact that is best resolved on a full trial record.

4. Conclusion with Respect to Claim 1

For the reasons discussed above, Petitioner explains sufficiently for purposes of institution where every limitation of claim 1 is taught or suggested in Swinger, Weikert, Benedikt, and Kurtz, as well as why one of

ordinary skill in the art would have combined these disclosures to successfully arrive at the subject matter of claim 1. Accordingly, Petitioner demonstrates a reasonable likelihood that claim 1 would have been obvious over Swinger, Weikert, Benedikt, and Kurtz.

5. Dependent Claims 2–5 and 8–12

Petitioner identifies where it contends each limitation of claims 2–5 and 8–12 are disclosed in Swinger, Weikert, Benedikt, and Kurtz. Pet. 56–60.

Patent Owner does not address Petitioner's arguments with respect to these claims, apart from its arguments directed to claim 1. Prelim. Resp. 49–60.

Upon review of the parties' arguments and supporting evidence, we determine that Petitioner demonstrates a reasonable likelihood that claims 2–5 and 8–12 would have been obvious over Swinger, Weikert, Benedikt, and Kurtz.

F. Combination of Swinger, Weikert, Benedikt, Kurtz, and L'Esperance, as well as Swinger, Weikert, Benedikt, Kurtz, and Huber

Petitioner contends claims 6 and 7 would have been obvious over the combined disclosures of Swinger, Weikert, Benedikt, Kurtz, and L'Esperance and the subject matter of claims 13 and 14 would have been obvious over the combined disclosures of Swinger, Weikert, Benedikt, Kurtz, and Huber. Pet. 60–68.

Patent Owner does not address Petitioner's arguments with respect to these grounds, apart from its arguments addressing claim 1. Prelim. Resp. 49–60.

Upon review of the parties' arguments and supporting evidence, we determine that Petitioner demonstrates a reasonable likelihood that claims 6

and 7 would have been obvious over Swinger, Weikert, Benedikt, Kurtz, and L'Esperance and that claims 13 and 14 would have been obvious over Swinger, Weikert, Benedikt, Kurtz, and Huber.

III. CONCLUSION

For the reasons discussed above, Petitioner demonstrates a reasonable likelihood that it would prevail in showing that challenged claims 1–14 of the '548 patent are unpatentable. Our decision at this stage derives from our review of the preliminary record before us and the parties are encouraged to further develop the record as to all arguments and positions discussed herein.

In accordance with the Court's decision in *SAS*, 138 S. Ct. at 1359–60, and Guidance on the Impact of *SAS* on AIA Trial Proceedings (April 26, 2018),[13] we institute *inter partes* review of all challenged claims (1–14) of the '548 patent on all grounds asserted in the Petition.

This decision does not reflect a final determination on the patentability of the claims. No arguments from the Preliminary Response carry over to trial and any arguments not made in Patent Owner's Response may be considered waived. *In re Nuvasive, Inc*., 842 F.3d 1376, 1380–81 (Fed. Cir. 2016) (holding Patent Owner waived an argument addressed in the Preliminary Response by not raising the same argument in the Patent Owner Response).

[13] Available at https://www.uspto.gov/patents-application-process/patent-trial-and-appeal-board/trials/guidance-impact-sas-aia-trial.

IV. ORDER

In consideration of the foregoing, it is hereby:

ORDERED that, pursuant to 35 U.S.C. § 314(a), an *inter partes* review of claims 1–14 of the ’548 patent is instituted with respect to all grounds set forth in the Petition; and

FURTHER ORDERED that, pursuant to 35 U.S.C. § 314(c) and 37 C.F.R. § 42.4(b), an *inter parties* review of the ’548 patent shall commence on the entry date of this Order, and notice is hereby given of the institution of trial.

FOR PETITIONER:

Gregg LoCascio
W. Todd Baker
Noah Frank
glocascio@kirkland.com
todd.baker@kirkland.com
noah.frank@kirkland.com

FOR PATENT OWNER:

Michael Morin
Jonathan Strang
Giri Pathmanaban
Susan Tull
michael.morin@lw.com
jonathan.strang@lw.com
giri.pathmanaban@lw.com
susan.tull@lw.com